FORD **TRANSIT Owner's Manual**



The information contained in this publication was correct at the time of going to print. In the interest of continuous development, we reserve the right to change specifications, design or equipment at any time without notice or obligation. No part of this publication may be reproduced, transmitted, stored in a retrieval system or translated into any language in any form by any means without our written permission. Errors and omissions excepted.

© Ford Motor Company 2019

All rights reserved.

Part Number: CG3796en 201911 20191210111042

Table of Contents

Introduction
About This Manual 9
Symbols Glossary 9
Data Recording 11
REACH 15
Replacement Parts Recommendation 15
Special Notices 15
Mobile Communications Equipment 16

Environment
Protecting the Environment 17

At a Glance
Instrument Panel - LHD 18
Instrument Panel - RHD 19

Child Safety
Installing Child Restraints 21
Child Restraint Positioning 25
Child Safety Locks - Vehicles Without: Power Sliding Door 29
Child Safety Locks - Vehicles With: Power Sliding Door 29

Seatbelts
Fastening the Seatbelts 30
Seatbelt Height Adjustment 31
Seatbelt Reminder 32

Supplementary Restraints System
Principle of Operation 33
Driver Airbag 33
Passenger Airbag 34
Switching the Passenger Airbag On and Off 34
Side Airbags 35
Side Curtain Airbags 36

Automatic Crash Notification System
Emergency Assistance 37

Keys and Remote Controls
General Information on Radio Frequencies 40
Remote Control - Vehicles Without: Power Sliding Door 40
Remote Control - Vehicles With: Power Sliding Door 40
Replacing a Lost Key or Remote Control 42

MyKey™
Principle of Operation 43
MyKey Settings 43
Creating a MyKey 44
Programming a MyKey 44
Clearing All MyKeys 45
Checking MyKey System Status 46
Using MyKey With Remote Start Systems 47
MyKey – Troubleshooting 47

Doors and Locks
Locking and Unlocking 48

Sliding Door - Vehicles Without: Power Sliding Door
Sliding Door Precautions 52
Opening the Sliding Door 52
Closing the Sliding Door 52

Sliding Door - Vehicles With: Power Sliding Door
Sliding Door Precautions 54
Opening the Sliding Door 54
Closing the Sliding Door 55

Transit (TTS) Vehicles Built From: 27-01-2020 Vehicles Built Up To: 20-09-2020, CG3796en enGBR, Edition date: 201911, First-Printing

Table of Contents

Stopping the Sliding Door Movement 56
Resetting the Power Sliding Door 56
Sliding Door – Troubleshooting 57

Security

Passive Anti-Theft System 59
Anti-Theft Alarm - Vehicles Without: Anti-Theft Alarm Horn with Integral Battery 59
Anti-Theft Alarm - Vehicles With: Anti-Theft Alarm Horn with Integral Battery 60

Power Running Boards

Using Power Running Boards 62

Steering Wheel

Adjusting the Steering Wheel 65
Locking the Steering Wheel 65

Wipers and Washers

Windshield Wipers 66
Autowipers 66
Windshield Washers 68
Rear Window Wiper and Washers 69

Lighting

General Information 70
Lighting Control 70
Autolamps 71
Instrument Lighting Dimmer 72
Headlamp Exit Delay 72
Automatic High Beam Control 72
Front Fog Lamps 74
Rear Fog Lamps 74
Headlamp Leveling 74
Cornering Lamps 75
Direction Indicators 76
Interior Lamps - Bus 76
Interior Lamps - Van 77
Rear Floodlamps 78

Windows and Mirrors

Power Windows 79
Exterior Mirrors 80
Interior Mirror 81
Sliding Windows 81
Rear Quarter Windows 81

Instrument Cluster

Gauges 83
Warning Lamps and Indicators 84

Information Displays

General Information 89
Trip Computer 91
Personalized Settings 93

Climate Control

Manual Climate Control 95
Hints on Controlling the Interior Climate 96
Rear Passenger Climate Controls 97
Heated Windshield 97
Heated Rear Window 97
Heated Exterior Mirrors - Vehicles Without: Heated Rear Window 97
Heated Exterior Mirrors - Vehicles With: Heated Rear Window 97
Auxiliary Heater 98
Remote Start 101

Seats

Sitting in the Correct Position 103
Head Restraints 103
Manual Seats 104
Power Seats 106
Rear Seats 108
Heated Seats 111

Transit (TTS) Vehicles Built From: 27-01-2020 Vehicles Built Up To: 20-09-2020, CG3796en enGBR, Edition date: 201911, First-Printing

Table of Contents

Auxiliary Power Points

Auxiliary Power Points 112
Cigar Lighter 114

Storage Compartments

Cup Holders 115
Overhead Console 115
Ashtray 115
Bottle Holders 115
Under Seat Storage - Vehicles With: Passenger Double Seat, Vehicles Without: Rear Climate Control, Excluding: Mild Hybrid Electric Vehicle (MHEV) 116
Under Seat Storage - Mild Hybrid Electric Vehicle (MHEV), Vehicles With: Passenger Double Seat/Rear Climate Control 116
Front Door Storage Compartment 117
Device Holder 117
Overhead Storage 118
Rear Overhead Storage 118

Starting and Stopping the Engine

General Information 119
Ignition Switch 119
Starting a Diesel Engine - Automatic Transmission 119
Starting a Diesel Engine - Manual Transmission 121
Switching Off the Engine 123

Unique Driving Characteristics

Hybrid Vehicle Operation - Mild Hybrid Electric Vehicle (MHEV) 124

Auto-Start-Stop - Manual Transmission, Excluding: Mild Hybrid Electric Vehicle (MHEV)

What Is Auto-Start-Stop 125
Auto-Start-Stop Precautions 125
Switching Auto-Start-Stop On and Off 125
Stopping the Engine 125
Restarting the Engine 125
Auto-Start-Stop Indicators 126
Auto-Start-Stop Audible Warning 126
Auto-Start-Stop – Troubleshooting 126

Auto-Start-Stop - Mild Hybrid Electric Vehicle (MHEV)

What Is Auto-Start-Stop 128
Auto-Start-Stop Precautions 128
Auto-Start-Stop Settings 128
Switching Auto-Start-Stop On and Off 128
Stopping the Engine 128
Restarting the Engine 129
Auto-Start-Stop Indicators 129
Auto-Start-Stop Audible Warning 129
Auto-Start-Stop – Troubleshooting 129

Auto-Start-Stop - Automatic Transmission

What Is Auto-Start-Stop 131
Auto-Start-Stop Precautions 131
Switching Auto-Start-Stop On and Off 131
Stopping the Engine 131
Restarting the Engine 131
Auto-Start-Stop Indicators 132
Auto-Start-Stop – Troubleshooting 132

Transit (TTS) Vehicles Built From: 27-01-2020 Vehicles Built Up To: 20-09-2020, CG3796en enGBR, Edition date: 201911, First-Printing

Table of Contents

Fuel and Refueling

Safety Precautions 134
Fuel Quality - Hydrotreated Vegetable Oil 134
Fuel Quality - Diesel 135
Fuel Filler Funnel Location 135
Running Out of Fuel 135
Refueling 136
Fuel Consumption 139

Engine Emission Control

Selective Catalytic Reductant System 140
Diesel Particulate Filter 144

Transmission

Manual Transmission 149
Automatic Transmission - 6-Speed Automatic Transmission 149
Automatic Transmission - 10-Speed Automatic Transmission 152

All-Wheel Drive

Using All-Wheel Drive 156

Brakes

General Information 157
Hints on Driving With Anti-Lock Brakes 157
Hill Start Assist 157

Parking Brake - Automatic Transmission, Vehicles With: Conventional Mechanical Parking Brake

Applying the Parking Brake 160
Releasing the Parking Brake 160
Parking Brake Audible Warning 160
Parking Brake – Troubleshooting 160

Parking Brake - Automatic Transmission, Vehicles With: Drop Down Parking Brake

Applying the Parking Brake 161
Releasing the Parking Brake 161
Parking Brake Audible Warning 161
Parking Brake – Troubleshooting 161

Parking Brake - Manual Transmission, Vehicles With: Conventional Mechanical Parking Brake

Applying the Parking Brake 162
Releasing the Parking Brake 162
Parking Brake Audible Warning 162
Parking Brake – Troubleshooting 162

Parking Brake - Manual Transmission, Vehicles With: Drop Down Parking Brake

Applying the Parking Brake 163
Releasing the Parking Brake 163
Parking Brake Audible Warning 163
Parking Brake – Troubleshooting 163

Traction Control

Principle of Operation 164
Using Traction Control 164

Stability Control

Principle of Operation 165
Using Stability Control 165

Parking Aids

Principle of Operation 166
Rear Parking Aid 166
Front Parking Aid 168
Side Sensing System 170

Transit (TTS) Vehicles Built From: 27-01-2020 Vehicles Built Up To: 20-09-2020, CG3796en enGBR, Edition date: 201911, First-Printing

Active Park Assist 172
Rear View Camera 174
180 Degree Camera 177

Cruise Control

Principle of Operation 179
Using Cruise Control 179
Using Adaptive Cruise Control 180

Driving Aids

Speed Limiter 189
Intelligent Speed Limiter 189
Driver Alert 191
Lane Keeping System 193
Blind Spot Information System 197
Cross Traffic Alert 200
Traffic Sign Recognition 204
Wrong Way Alert 206
Eco 207
Pre-Collision Assist 208
Front View Camera 212
Drive Control 212

Load Carrying

General Information 214
Luggage Covers 214
Roof Racks and Load Carriers - Bus 215
Roof Racks and Load Carriers - Van 215
Load Retaining Fixtures 216
Tailgate 217
Bed Access 218

Towing

Towing a Trailer 221
Trailer Sway Control 222
Tow Ball 222
Towing the Vehicle on Four Wheels - Automatic Transmission 222
Towing the Vehicle on Four Wheels - Manual Transmission 223

Driving Hints

Reduced Engine Performance 224
Economical Driving 224
Cold Weather Precautions 224
Breaking-In 225
Driving Through Water 225
Floor Mats 225

Roadside Emergencies

Hazard Flashers 227
Emergency Exit 227
Fuel Shutoff 227
Jump Starting the Vehicle 228
Towing Points 230

Emergency Equipment

Storing a First Aid Kit 232
Storing a Warning Triangle 232

Fuses

Fuse Box Locations 233
Fuse Specification Chart 234
Changing a Fuse 246

Maintenance

General Information 248
Opening and Closing the Hood 248
Under Hood Overview - AWD/RWD/LHD 249
Under Hood Overview - FWD/LHD 250
Under Hood Overview - AWD/RWD/RHD 251
Under Hood Overview - FWD/RHD 252
Engine Oil Dipstick 253
Engine Oil Check 253
Draining the Fuel Filter Water Trap 254
Engine Cooling Fan 254

Transit (TTS) Vehicles Built From: 27-01-2020 Vehicles Built Up To: 20-09-2020, CG3796en enGBR, Edition date: 201911, First-Printing

Engine Coolant Check 254
Brake Fluid Check 256
Clutch Fluid Check 256
Power Steering Fluid Check 256
Changing the 12V Battery 257
Adjusting the Headlamps 259
Fuel Filter Service Indicator Check 260
Washer Fluid Check 261
Checking the Wiper Blades 261
Changing the Front Wiper Blades 261
Changing the Rear Wiper Blades 261
Removing a Headlamp 262
Changing a Bulb 263

Vehicle Care

Cleaning the Exterior 269
Cleaning the Interior 270
Repairing Minor Paint Damage 272
Cleaning the Wheels 272
Body Styling Kits 272

Wheels and Tires

General Information 273
Tire Sealant and Inflator Kit 273
Tire Care 276
Using Summer Tires 276
Using Winter Tires 276
Using Snow Chains 277
Tire Pressure Monitoring System 279
Changing a Road Wheel 282
Tire Pressures - Van 290
Tire Pressures - Bus 295
Lug Nuts 297

Capacities and Specifications

Vehicle Dimensions - Bus/Kombi/Van 298
Vehicle Dimensions - Chassis Cab/ Chassis Double Cab 299
Towbar Dimensions - Bus/Kombi/Van 302
Towbar Dimensions - Chassis Cab/ Chassis Double Cab 304
Vehicle Identification Plate 306
Vehicle Identification Number 307
Capacities and Specifications 307
Bulb Specification Chart - Vehicles With: Halogen Headlamps 310
Bulb Specification Chart - Vehicles With: High Intensity Discharge Headlamps 312
Fuel Consumption Figures 314
Fuel Consumption Figures - 2.0L EcoBlue 314

Connected Vehicle

Connected Vehicle Requirements 315
Connected Vehicle Limitations 315
Connecting the Vehicle to a Mobile Network 315
Connecting the Vehicle to a Wi-Fi Network 315
Connected Vehicle – Troubleshooting - Vehicles With: Modem 316
Connected Vehicle – Troubleshooting - Vehicles With: SYNC 3/SYNC 2.5 317

Wi-Fi Hotspot

Creating a Wi-Fi Hotspot 319
Changing the Wi-Fi Hotspot Name or Password 319

Audio System

General Information 320
Audio Unit - Vehicles Without: SYNC 320
Audio Unit - Vehicles With: SYNC 3 322
Audio Unit - Vehicles With: SYNC 2.5 323
AM/FM Radio - Vehicles Without: SYNC 324

Transit (TTS) Vehicles Built From: 27-01-2020 Vehicles Built Up To: 20-09-2020, CG3796en enGBR, Edition date: 201911, First-Printing

AM/FM Radio - Vehicles With: SYNC 2.5 325
Digital Radio - Vehicles Without: SYNC 325
Digital Radio - Vehicles With: SYNC 2.5 326
Audio Unit Clock and Date Displays - Vehicles Without: SYNC 327
Audio Unit Clock and Date Displays - Vehicles With: SYNC 2.5 327
Connecting a Bluetooth® Device - Vehicles Without: SYNC 327
Connecting a Bluetooth® Device - Vehicles With: SYNC 2.5 327
Streaming Bluetooth Audio - Vehicles Without: SYNC 327
Streaming Bluetooth Audio - Vehicles With: SYNC 2.5 328
Playing Media From a USB Device - Vehicles Without: SYNC 328
Playing Media From a USB Device - Vehicles With: SYNC 2.5 329
USB Port 329
Apps - Vehicles With: SYNC 2.5 329
Using Voice Recognition 332

SYNC™ 3

General Information 333
Using Voice Recognition 335
Entertainment 341
Phone 343
Navigation 345
Apps 349
Settings 350
SYNC™ 3 Troubleshooting 352

Appendices

Electromagnetic Compatibility 362
End User License Agreement 365
Declaration of Conformity 390

Transit (TTS) Vehicles Built From: 27-01-2020 Vehicles Built Up To: 20-09-2020, CG3796en enGBR, Edition date: 201911, First-Printing

Transit (TTS) Vehicles Built From: 27-01-2020 Vehicles Built Up To: 20-09-2020, CG3796en enGBR, Edition date: 201911, First-Printing

ABOUT THIS MANUAL

Thank you for choosing Ford. We recommend that you take some time to get to know your vehicle by reading this manual. The more that you know about your vehicle, the greater the safety and pleasure you will get from driving it.

WARNING: Driving while distracted can result in loss of vehicle control, crash and injury. We strongly recommend that you use extreme caution when using any device that may take your focus off the road. Your primary responsibility is the safe operation of your vehicle. We recommend against the use of any hand-held device while driving and encourage the use of voice-operated systems when possible. Make sure you are aware of all applicable local laws that may affect the use of electronic devices while driving.

Note: *This manual describes product features and options available throughout the range of available models, sometimes even before they are generally available. It may describe options not fitted to the vehicle you have purchased.*

Note: *Some of the illustrations in this manual may show features as used in different models, so may appear different to you on your vehicle.*

Note: *Always use and operate your vehicle in line with all applicable laws and regulations.*

Note: *Pass on this manual when selling your vehicle. It is an integral part of your vehicle.*

This manual may qualify the location of a component as left-hand side or right-hand side. The side is determined when facing forward in the seat.

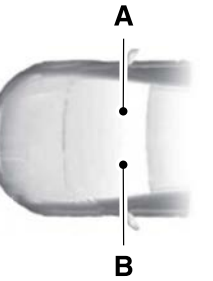

E154903

A Right-hand side.
B Left-hand side.

SYMBOLS GLOSSARY

These are some of the symbols you may see on your vehicle.

Safety alert.

See the Owner's Manual.

Air conditioning system.

Anti-lock braking system.

Avoid smoking, flames or sparks.

Battery.

Battery acid.

Brake fluid level.

Transit (TTS) Vehicles Built From: 27-01-2020 Vehicles Built Up To: 20-09-2020, CG3796en enGBR, Edition date: 201911, First-Printing


Brake system.


Brake failure.


Cabin air filter.


Check fuel cap.


Child safety door lock.


Child safety door unlock.


Child seat lower anchor.


Child seat tether anchor.


Cruise control.


Do not open when hot.


Electronic power steering malfunction.


Engine air filter.


Engine coolant.


Engine coolant temperature.


Engine oil.


Explosive gas.


Fan warning.


Fasten seatbelt.


Front airbag.


Front fog lamps.


Fuel pump reset.


Fuse compartment.


Hazard warning flashers.


Heated rear window.


Heated windshield.


Interior luggage compartment release.


Jack.


Keep out of reach of children.


Lighting control.


Low tire pressure warning.

Transit (TTS) Vehicles Built From: 27-01-2020 Vehicles Built Up To: 20-09-2020, CG3796en enGBR, Edition date: 201911, First-Printing


Maintain correct fluid level.


Panic alarm.


Parking aid.


Parking brake.


Power steering fluid.


Power windows.


Power window lockout.


Check Engine.


Service engine soon.


Side airbag.


Shield the eyes.


Stability control.


Windshield wash and wipe.

DATA RECORDING

WARNING: Do not connect wireless plug-in devices to the data link connector. Unauthorized third parties could gain access to vehicle data and impair the performance of safety related systems. Only allow repair facilities that follow our service and repair instructions to connect their equipment to the data link connector.

We respect your privacy and are committed to protecting it. The information contained in this publication was correct at the time of going to print but as technology rapidly changes, we recommend that you visit the local Ford website for the latest information.

Your vehicle has electronic control units that have data recording functionality and the ability to permanently or temporarily store data. This data could include information on the condition and status of your vehicle, vehicle maintenance requirements, events and malfunctions. The types of data that can be recorded are described in this section. Some of the data recorded is stored in event logs or error logs.

Note: *Error logs are reset following a service or repair.*

Note: *We may provide information in response to requests from law enforcement, other government authorities and third parties acting with lawful authority or through a legal process. Such information could be used by them in legal proceedings.*

Transit (TTS) Vehicles Built From: 27-01-2020 Vehicles Built Up To: 20-09-2020, CG3796en enGBR, Edition date: 201911, First-Printing

Data recorded includes, for example:

- Operating states of system components, for example fuel level, tire pressure and battery charge level.
- Vehicle and component status, for example wheel speed, deceleration, lateral acceleration and seatbelt status.
- Events or errors in essential systems, for example headlamps and brakes.
- System responses to driving situations, for example airbag deployment and stability control.
- Environmental conditions, for example temperature.

Some of this data, when used in combination with other information, for example an accident report, damage to a vehicle or eyewitness statements, could be associated with a specific person.

Service Data

Our dealers collect service data through the data link connector in your vehicle. They use service data, for example error logs, to help them if you take your vehicle for repair. They share this data with our technical team, if required, to help with diagnosis. In addition to using the information for diagnosis and repair, we use and share service data with our service providers, for example parts suppliers, where required and where permitted by law, for continuous improvement or with other information that we have about you, for example your contact information, to offer you products and services that may be of interest to you according to your preferences and where allowed by law. Our service providers are equally required by law to protect your data and retain it in accordance with data retention policies.

Note: *Third party repair facilities can also collect service data through the data link connector.*

Event Data

This vehicle is equipped with an event data recorder. The main purpose of an event data recorder is to record, in certain crash or near crash-like situations, such as an airbag deployment or hitting a road obstacle; this data will assist in understanding how a vehicle's systems performed. The event data recorder is designed to record data related to vehicle dynamics and safety systems for a short period of time, typically 30 seconds or less.

The event data recorder in this vehicle is designed to record such data as:

- How various systems in your vehicle were operating;
- Whether or not the driver and passenger seatbelts were buckled/fastened;
- How far (if at all) the driver was depressing the accelerator and/or the brake pedal; and
- How fast the vehicle was traveling; and
- Where the driver was positioning the steering wheel.

This data can help provide a better understanding of the circumstances in which crashes and injuries occur.

Note: *Event data recorder data is recorded by your vehicle only if a non-trivial crash situation occurs; no data is recorded by the event data recorder under normal driving conditions and no personal data or information (e.g., name, gender, age, and crash location) is recorded. However, parties, such as law enforcement, could combine the event data recorder data with the type of personally identifying data routinely acquired during a crash investigation.*

Transit (TTS) Vehicles Built From: 27-01-2020 Vehicles Built Up To: 20-09-2020, CG3796en enGBR, Edition date: 201911, First-Printing

To read data recorded by an event data recorder, special equipment is required, and access to the vehicle or the event data recorder is needed. In addition to the vehicle manufacturer, other parties, such as law enforcement, that have such special equipment, can read the information if they have access to the vehicle or the event data recorder.

Comfort, Convenience and Entertainment Data

Your vehicle has electronic control units that have the ability to store data based on your personalized settings. The data is stored locally in the vehicle or on devices that you connect to it, for example, a USB drive or digital music player. You can delete some of this data and also choose whether to share it through the services to which you subscribe. See **Settings** (page 350).

Comfort and Convenience Data

Data recorded includes, for example:

- Seat and steering wheel position.
- Climate control settings.
- Radio presets.

Entertainment Data

Data recorded includes, for example:

- Music, videos or album art.
- Contacts and corresponding address book entries.
- Navigation destinations.

Services That We Provide

If you use our services, we collect and use data, for example account information, vehicle location and driving characteristics, that could identify you. We transmit this data through a dedicated, protected connection. We only collect and use data to enable your use of our services to which you have subscribed, with your consent or where permitted by law. For additional information, see the terms and conditions of the services to which you have subscribed.

For additional information about our privacy policy, refer to the local Ford website.

Services That Third Parties Provide

We recommend that you review the terms and conditions and data privacy information for any services to which you subscribe. We take no responsibility for services that third parties provide.

Vehicles With a Modem (If Equipped)



The modem has a SIM. The modem was enabled when your vehicle was built and periodically sends messages to stay connected to the cell phone network, receive automatic software updates and send vehicle-related information to us, for example diagnostic information. These messages could include information that identifies your vehicle, the SIM and the electronic serial number of the modem. Cell phone network service providers could have access to additional information, for example cell phone network tower identification. For additional information about our privacy policy, visit www.FordConnected.com or refer to your local Ford website.

Note: *The modem continues to send this information unless you disable the modem or stop the modem from sharing vehicle data by changing the modem settings.*

Note: *The service can be unavailable or interrupted for a number of reasons, for example environmental or topographical conditions and data plan coverage.*

Transit (TTS) Vehicles Built From: 27-01-2020 Vehicles Built Up To: 20-09-2020, CG3796en enGBR, Edition date: 201911, First-Printing

Note: *To find out if your vehicle has a modem, visit www.FordConnected.com.*

Vehicles With SYNC

Mobile Device Data

If you connect a mobile device to your vehicle, you can display data from your device on the touchscreen for example, music and album art. You can share your vehicle data with mobile apps on your device through the system. See **Apps** (page 349).

The mobile apps function operates by your connected device sending data to us in the United States. The data is encrypted and includes the vehicle identification number of your vehicle, the SYNC module serial number, odometer, enabled apps, usage statistics and debugging information. We retain it only as long as necessary to provide the service, to troubleshoot, for continuous improvement and to offer you products and services that may be of interest to you according to your preferences and where allowed by law.

If you connect a cell phone to the system, the system creates a profile that links to that cell phone. The cell phone profile enables more mobile features and efficient operation. The profile contains, for example data from your phonebook, read and unread text messages and call history, including history of calls when your cell phone was not connected to the system.

If you connect a media device, the system creates and retains a media device index of supported media content. The system also records a short diagnostic log of approximately 10 minutes of all recent system activity.

The cell phone profile, media device index and diagnostic log remain in your vehicle unless you delete them and are generally accessible only in your vehicle when you connect your cell phone or media device. If you no longer plan to use the system or your vehicle, we recommend you use the master reset function to erase the stored information. See **Settings** (page 350).

System data cannot be accessed without special equipment and access to your vehicle's module.

For additional information about our privacy policy, refer to the local Ford website.

Note: *To find out if your vehicle has a connectivity technology, visit www.FordConnected.com.*

Vehicles With an Emergency Call System

When the emergency call system is active, it may disclose to emergency services that your vehicle has been in a crash involving the deployment of an airbag or activation of the fuel pump shut-off. Certain versions or updates to the emergency call system may also be capable of electronically or verbally disclosing to emergency services operators your vehicle location or other details about your vehicle or crash to assist emergency services operators to provide the most appropriate emergency services. If you do not want to disclose this information, do not activate the emergency call system.

Examples of data that the system transmits are:

- Vehicle identification number.
- Vehicle fuel type.
- Current time.
- Vehicle location and direction.

Transit (TTS) Vehicles Built From: 27-01-2020 Vehicles Built Up To: 20-09-2020, CG3796en enGBR, Edition date: 201911, First-Printing

- Whether the call was automatically or manually initiated.
- Vehicle category.

Note: *You cannot deactivate emergency call systems that are required by law.*

REACH

We are committed to promoting the responsible manufacturing, handling and use of our products and support the underlying goals of ***REACH***, a European Union regulation that concerns the registration, evaluation, authorisation and restriction of chemicals.

We specifically support Regulation EC 1907/2006 Article 33(1) that relates to substances of very high concern which appear on the current list for authorisation.

If these substances do exist in a product, it is important to guarantee their safe use so the regulation is designed to enable you to take any appropriate risk management measures.

To find out more about the ***REACH*** directive, search ***REACH*** on the local Ford website.

Note: *To find the local Ford website, visit https://corporate.ford.com/global-links.html#s0f0.*

REPLACEMENT PARTS RECOMMENDATION

We have built your vehicle to the highest standards using quality parts. We recommend that you demand the use of genuine Ford and Motorcraft parts whenever your vehicle requires scheduled maintenance or repair. You can clearly identify genuine Ford and Motorcraft parts by looking for the Ford, FoMoCo or Motorcraft branding on the parts or their packaging.

Scheduled Maintenance and Mechanical Repairs

One of the best ways for you to make sure that your vehicle provides years of service is to have it maintained in line with our recommendations using parts that conform to the specifications detailed in this Owner's Manual.

Genuine Ford and Motorcraft parts meet or exceed these specifications.

Collision Repairs

We hope that you never experience a collision, but accidents happen sometimes.

Genuine Ford replacement collision parts meet our stringent requirements for fit, finish, structural integrity, corrosion protection and dent resistance. During vehicle development we validate that these parts deliver the intended level of protection as a whole system. A great way to know for sure you are getting this level of protection is to use genuine Ford replacement collision parts.

Warranty on Replacement Parts

Genuine Ford and Motorcraft replacement parts are the only replacement parts that benefit from a Ford Warranty.

The Ford Warranty may not cover damage caused to your vehicle as a result of failed non-Ford parts.

For additional information, refer to the terms and conditions of the Ford Warranty.

SPECIAL NOTICES

If converting or modifying your vehicle from production specification, refer to the Body and Equipment Mounting Manual at www.etis.ford.com/BEMM.

Transit (TTS) Vehicles Built From: 27-01-2020 Vehicles Built Up To: 20-09-2020, CG3796en enGBR, Edition date: 201911, First-Printing

MOBILE COMMUNICATIONS EQUIPMENT

WARNING: Driving while distracted can result in loss of vehicle control, crash and injury. We strongly recommend that you use extreme caution when using any device that may take your focus off the road. Your primary responsibility is the safe operation of your vehicle. We recommend against the use of any hand-held device while driving and encourage the use of voice-operated systems when possible. Make sure you are aware of all applicable local laws that may affect the use of electronic devices while driving.

Using mobile communications equipment is becoming increasingly important in the conduct of business and personal affairs. However, you must not compromise your own or others' safety when using such equipment. Mobile communications can enhance personal safety and security when appropriately used, particularly in emergency situations. Safety must be paramount when using mobile communications equipment to avoid negating these benefits. Mobile communication equipment includes, but is not limited to, cellular phones, pagers, portable email devices, text messaging devices and portable two-way radios.

Transit (TTS) Vehicles Built From: 27-01-2020 Vehicles Built Up To: 20-09-2020, CG3796en enGBR, Edition date: 201911, First-Printing

PROTECTING THE ENVIRONMENT

You should play your part in protecting the environment. Correct vehicle usage and the authorized disposal of waste, cleaning and lubrication materials are significant steps toward this aim.

For additional information about our sustainability progress and initiatives, visit *www.sustainability.ford.com*.

Transit (TTS) Vehicles Built From: 27-01-2020 Vehicles Built Up To: 20-09-2020, CG3796en enGBR, Edition date: 201911, First-Printing

INSTRUMENT PANEL - LHD

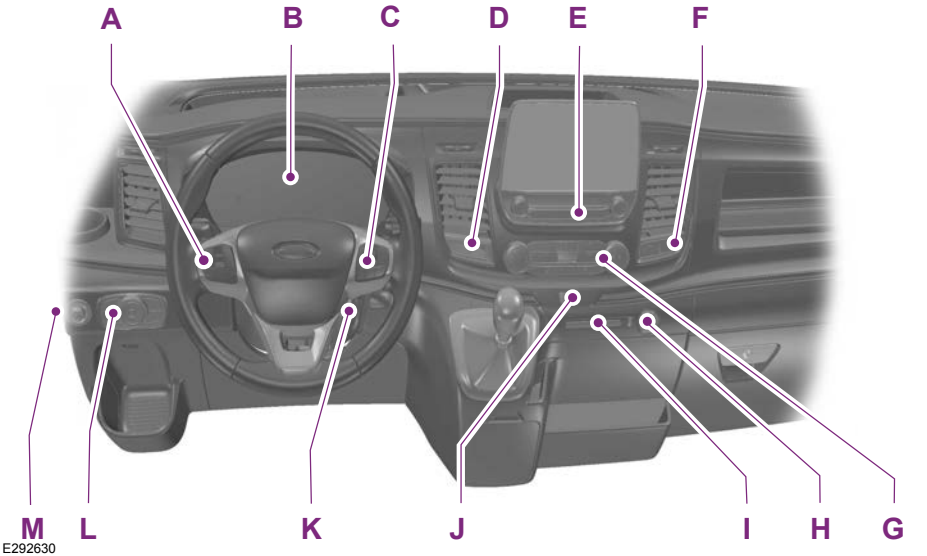

A Cruise control buttons. See **Cruise Control** (page 179). Speed limiter buttons. See **Speed Limiter** (page 189). Audio buttons.

B Instrument cluster. See **Instrument Cluster** (page 83).

C Information display controls. See **Information Displays** (page 89). Audio and voice control buttons. See **Audio System** (page 320).

D Traction control switch. See **Traction Control** (page 164). Parking aid button. See **Parking Aids** (page 166). Active park assist button. See **Active Park Assist** (page 172).

E Audio unit. See **Audio System** (page 320).

F Auto-Start-Stop deactivation switch.Sliding door button. See **Sliding Door Precautions** (page 52).

G Climate control unit. See **Climate Control** (page 95).

H Auxiliary power point. USB port. See **Auxiliary Power Points** (page 112).

I Passenger airbag deactivation indicator. See **Switching the Passenger Airbag On and Off** (page 34).

Transit (TTS) Vehicles Built From: 27-01-2020 Vehicles Built Up To: 20-09-2020, CG3796en enGBR, Edition date: 201911, First-Printing

J Hazard flasher switch. See **Hazard Flashers** (page 227).
K Ignition switch. See **Ignition Switch** (page 119).
L Lighting control. See **Lighting** (page 70).
M Exterior mirror switch. See **Exterior Mirrors** (page 80).

INSTRUMENT PANEL - RHD

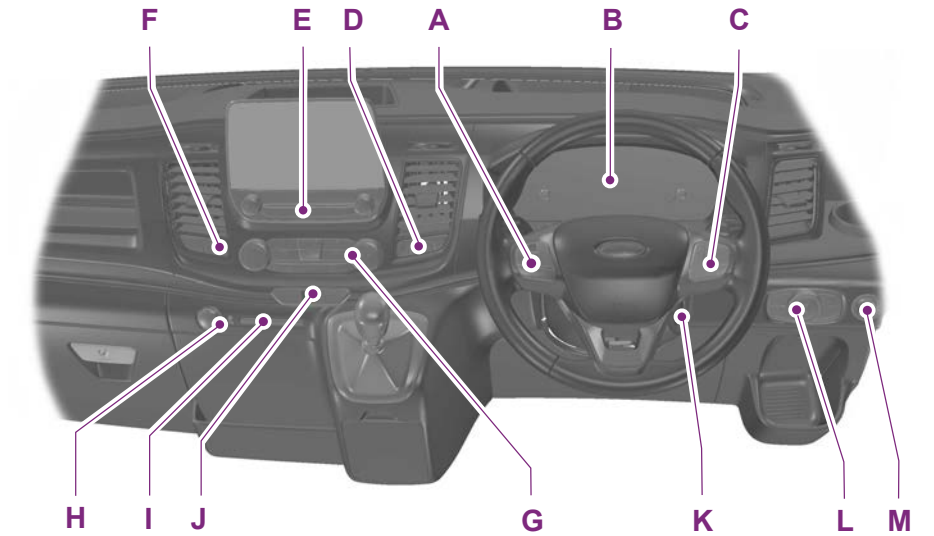

E292631

A Cruise control buttons. See **Cruise Control** (page 179). Speed limiter buttons. See **Speed Limiter** (page 189). Audio buttons.
B Instrument cluster. See **Instrument Cluster** (page 83).
C Information display controls. See **Information Displays** (page 89). Audio and voice control buttons. See **Audio System** (page 320).
D Traction control switch. See **Traction Control** (page 164). Parking aid button. See **Parking Aids** (page 166). Active park assist button. See **Active Park Assist** (page 172).
E Audio unit. See **Audio System** (page 320).

Transit (TTS) Vehicles Built From: 27-01-2020 Vehicles Built Up To: 20-09-2020, CG3796en enGBR, Edition date: 201911, First-Printing

F Auto-Start-Stop deactivation switch.Sliding door button. See **Sliding Door Precautions** (page 52).

G Climate control unit. See **Climate Control** (page 95).

H Auxiliary power point. USB port. See **Auxiliary Power Points** (page 112).

I Passenger airbag deactivation indicator. See **Switching the Passenger Airbag On and Off** (page 34).

J Hazard flasher switch. See **Hazard Flashers** (page 227).

K Ignition switch. See **Ignition Switch** (page 119).

L Lighting control. See **Lighting** (page 70).

M Exterior mirror switch. See **Exterior Mirrors** (page 80).

Transit (TTS) Vehicles Built From: 27-01-2020 Vehicles Built Up To: 20-09-2020, CG3796en enGBR, Edition date: 201911, First-Printing

INSTALLING CHILD RESTRAINTS



E161855



E133140



E68916

WARNING: Extreme Hazard! Never use a rearward facing child restraint on a seat protected by an active airbag in front of it. Death or serious injury to the child can occur.

WARNING: You must switch the passenger airbag off when using a rearward facing child restraint on the front seat.

WARNING: You must switch the passenger airbag on following the removal of the child restraint.

WARNING: Read and follow the manufacturer's instructions when you are installing a child restraint.

WARNING: Do not modify child restraints in any way.

WARNING: Do not hold a child on your lap when your vehicle is moving.

WARNING: Do not leave children or pets unattended in your vehicle. Failure to follow this instruction could result in personal injury or death.

WARNING: If your vehicle has been involved in a crash, have the child restraints checked.

Only child restraints certified to ECE-R129 or ECE-R44.03 (or later) have been tested and approved for use in your vehicle.

Note: *Mandatory use of child restraints varies from country to country.*

Child Seats for Different Mass Groups

Use the correct child seat as follows:

Transit (TTS) Vehicles Built From: 27-01-2020 Vehicles Built Up To: 20-09-2020, CG3796en enGBR, Edition date: 201911, First-Printing

Rearward Facing Baby Safety Seat



E68918

Secure children that weigh less than 13 kg (29 lb) in a rearward facing baby safety seat (Group 0+) on the front seat.

Child Safety Seat



E68920

Secure children that weigh between 13 kg (29 lb) and 18 kg (40 lb) in a child safety seat (Group 1) on the front seat.

Booster Seats

WARNING: Do not install a booster seat or a booster cushion with only the lap strap of the seatbelt.

WARNING: Do not install a booster seat or a booster cushion with a seatbelt that is slack or twisted.

WARNING: Do not put the shoulder section of the seatbelt or allow the child to put the shoulder section of the seatbelt under their arm or behind their back. Failure to follow this instruction could reduce the effectiveness of the seatbelt and increase the risk of injury or death in a crash.

WARNING: Do not use pillows, books or towels to boost your child's height. Failure to follow this instruction could result in personal injury or death.

WARNING: Make sure that your children sit in an upright position.

WARNING: When using a child restraint on a rear seat, the child restraint must rest tightly against the vehicle seat. It must not touch the head restraint. If necessary remove the head restraint.

WARNING: You must reinstall the head restraint following the removal of the child restraint.

Secure children that weigh more than 15 kg (33 lb) but are less than 150 cm (60 in) tall in a booster seat or a booster cushion.

Transit (TTS) Vehicles Built From: 27-01-2020 Vehicles Built Up To: 20-09-2020, CG3796en enGBR, Edition date: 201911, First-Printing

Booster Seat (Group 2)



E70710

We recommend that you use a booster seat that combines a cushion with a backrest instead of a booster cushion only. The raised seating position will allow you to position the shoulder strap of the adult seatbelt over the center of your child's shoulder and the lap strap tightly across their hips.

Booster Cushion (Group 3)

WARNING: When using a booster cushion, make sure you adjust the vehicle head restraint on that seating position.



E68924

ISOFIX Anchor Points

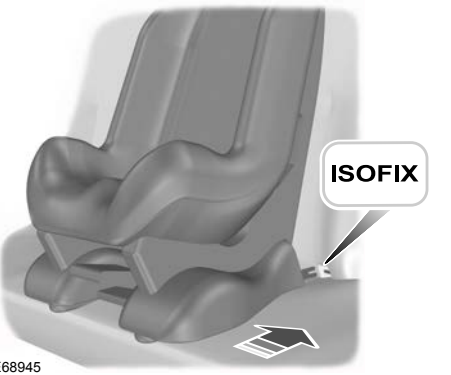

E68945

WARNING: Use an anti-rotation device when using the ISOFIX system. We recommend the use of a top tether or support leg.

Your vehicle may have ISOFIX anchor points that accommodate universally approved ISOFIX child seats.

The ISOFIX system has two rigid attachment arms on the child seat that attach to anchor points on the second row seats, where the cushion and backrest meet. Tether anchor points are fitted to the underside or rear of the second row seats for child seats with a top tether.

Note: *When you are purchasing an ISOFIX seat, make sure that you know the correct mass group and ISOFIX size class for the intended seating locations.* *See **Child Restraint Positioning** (page 25).*

Transit (TTS) Vehicles Built From: 27-01-2020 Vehicles Built Up To: 20-09-2020, CG3796en enGBR, Edition date: 201911, First-Printing

Attaching a Child Seat with Top Tethers

WARNING: Do not attach the top tether strap to anything other than the correct top tether strap anchor point.

Follow the child seat manufacturer's instructions for installing a child seat with a top tether.

Type 1



E188718

Type 2



E188215

Attaching a Child Seat with a Support Leg

WARNING: If you use a child restraint that has a support leg, make sure the support leg rests securely on the floor.

WARNING: Make sure that the child restraint manufacturer lists your vehicle as suitable for use with this type of child restraint.

Follow the child seat manufacturer's instructions for installing a child seat with a support leg.

Transit (TTS) Vehicles Built From: 27-01-2020 Vehicles Built Up To: 20-09-2020, CG3796en enGBR, Edition date: 201911, First-Printing



E162148

CHILD RESTRAINT POSITIONING

WARNING: Extreme Hazard! Never use a rearward facing child restraint on a seat protected by an active airbag in front of it. Death or serious injury to the child can occur.

WARNING: If you use a child restraint that has a support leg, make sure the support leg rests securely on the floor.

WARNING: You must reinstall the head restraint following the removal of the child restraint.

WARNING: If you use a child restraint and a seatbelt, make sure that the seatbelt is not slack or twisted.

WARNING: Make sure the child restraint rests tightly against the vehicle seat. If necessary, adjust the seat backrest to an upright position. It may also be necessary to lift or remove the head restraint.

Note: *When using a child restraint on a front seat, always adjust the front passenger seat as far back as possible. If it proves difficult to tighten the lap section of the seatbelt without slack remaining, adjust the seat backrest to the fully upright position and raise the height of the seat.*

See an authorized dealer for the latest details relating to our recommended child restraints.

Transit (TTS) Vehicles Built From: 27-01-2020 Vehicles Built Up To: 20-09-2020, CG3796en enGBR, Edition date: 201911, First-Printing

Seating positions	Mass group categories				
	0	0+	1	2	3
	0–10 kg (0–22 lb)	0–13 kg (0–29 lb)	9–18 kg (20–40lb)	15–25 kg (33–55lb)	22–36 kg (49–79 lb)
Front passenger seat with airbag **ON**	X	X	UF[1]	UF[1]	UF[1]
Front passenger seat with airbag **OFF**	U[1]	U[1]	U[1]	U[1]	U[1]
Rear seats - second row, center position - bus	U	U	U	U	U
Rear seats - second row, center position - bus[2]	X	X	X	X	X
Rear seats - second row, outboard positions and third row to sixth row - bus	L	L	L	L	L
Rear seats - second row, outboard positions and third row to sixth row - bus[2]	X	X	X	X	X
Rear seats - second row - double cab in van	U	U	U	U	U
Rear seats - second row - double chassis cab	L	L	L	L	L
Rear seats - second row - kombi wide	U	U	U	U	U
Rear seats - second row - kombi narrow (window and center seat)	X	X	UF[1]	UF[1]	UF[1]

Transit (TTS) Vehicles Built From: 27-01-2020 Vehicles Built Up To: 20-09-2020, CG3796en enGBR, Edition date: 201911, First-Printing

Seating positions	Mass group categories				
	0	0+	1	2	3
	0–10 kg (0–22 lb)	0–13 kg (0–29 lb)	9–18 kg (20–40lb)	15–25 kg (33–55lb)	22–36 kg (49–79 lb)
Rear seats - second row - kombi narrow (door side seat)	X	X	X	X	X
Rear seats - third row - kombi	L	L	L	L	L

[1] We recommend that you secure children in a government approved child restraint, on a rear seat.

[2] Vehicles with non-removable head restraints.

L Suitable only for the following child restraints:

- Group 0 and 0+ Britax Baby-safe plus (E1-04301146).
- Group 1 Maxi-Cosi Priori XP (E1-04301153).
- Group 2 and 3 Britax Kid (E1-04301148).

U Suitable for universal category child restraints approved for use in this mass group.

UF Suitable for universal category forward facing child restraint systems.

X Not suitable for children in this mass group.

ISOFIX Child Restraints

Seating positions		Mass group categories		
		0	0+	1
		0–10 kg (0–22 lb)	0–13 kg (0–29 lb)	9–18 kg (20–40 lb)
		Baby safety restraint		Child safety restraint
Rear ISOFIX - second row - bus[1]	Size type	IU	IU	IU
	Size class	E	D, E	A, B, B1, D
Rear ISOFIX - second row - double cab in van	Size type	IU	IU	IU
	Size class	E	C, D, E [2]	A, B, B1, C, D
Rear ISOFIX - second row - double chassis cab	Size type	IU	IU	IU

Transit (TTS) Vehicles Built From: 27-01-2020 Vehicles Built Up To: 20-09-2020, CG3796en enGBR, Edition date: 201911, First-Printing

Seating positions		Mass group categories		
		0	0+	1
		0–10 kg (0–22 lb)	0–13 kg (0–29 lb)	9–18 kg (20–40 lb)
		Baby safety restraint		Child safety restraint
	Size class	E	C, D, E [2]	A, B, B1, C, D
Rear ISOFIX - second row - kombi	Size type	IU	IU	IU
	Size class	E	C, D, E [2]	A, B, B1, C, D
Rear ISOFIX - third row - kombi	Size type	X	X	IU
	Size class			A, B, B1

[1] If your vehicle has a single passenger front row seat, C-type seats are suitable. If your vehicle has dual passenger front row seats, only D-type seats are suitable.

[2] No ISOFIX available if the vehicle seats have non-removable head restraints.

IU Suitable for universal category ISOFIX child restraints approved for use in this mass group.

Note: *When you are purchasing an ISOFIX child restraint, make sure that you know the correct mass group and ISOFIX size class for the intended seating locations.*

The ISOFIX size class for both universal and semi-universal child restraints systems is defined by the capital letters A to E. These identification letters are displayed on ISOFIX child restraints.

Transit (TTS) Vehicles Built From: 27-01-2020 Vehicles Built Up To: 20-09-2020, CG3796en enGBR, Edition date: 201911, First-Printing

CHILD SAFETY LOCKS - VEHICLES WITHOUT: POWER SLIDING DOOR (IF EQUIPPED)

WARNING: You cannot open the rear doors from inside if you have put the child safety locks on.



E176719

A child safety lock is on the rear edge of each rear door. You must set the child safety lock separately on each door.

Left-Hand Side

Turn it counterclockwise to switch the child lock on and clockwise to switch it off.

Right-Hand Side

Turn it clockwise to switch the child lock on and counterclockwise to switch it off.

CHILD SAFETY LOCKS - VEHICLES WITH: POWER SLIDING DOOR

WARNING: You cannot open the rear doors from inside if you have put the child safety locks on.

The child safety lock switch is on the instrument panel.



Press the switch to switch the child safety locks on.

Note: ***ON*** *illuminates in the switch.*

Press the switch again to switch them off.

Child Safety Locks Information Messages

Message	Action
Child lock malfunction See manual	Try to switch the child safety locks on again. If the message continues to appear, have your vehicle checked as soon as possible.

Transit (TTS) Vehicles Built From: 27-01-2020 Vehicles Built Up To: 20-09-2020, CG3796en enGBR, Edition date: 201911, First-Printing

FASTENING THE SEATBELTS

WARNING: Insert the tongue into the buckle until you hear a distinct click. You have not fastened the seatbelt correctly if you do not hear a click.

WARNING: Make sure that your seatbelt is securely stored away and is not outside your vehicle when closing the door.



E68584



E68585



E68586

Pull the seatbelt out steadily. It may lock if you pull it sharply or if your vehicle is on a slope.

Press the red button on the buckle to release the seatbelt. Hold the seatbelt tongue and let it retract completely and smoothly to its stowed position.

Using Seatbelts During Pregnancy

WARNING: Position the seatbelt correctly for your safety and that of your unborn child. Do not use only the lap strap or the shoulder strap.

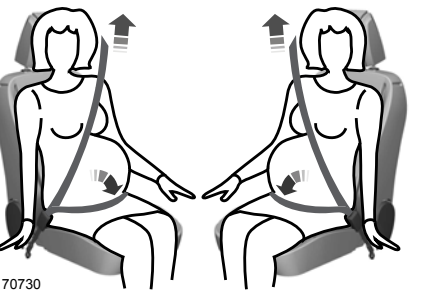

E170730

Transit (TTS) Vehicles Built From: 27-01-2020 Vehicles Built Up To: 20-09-2020, CG3796en enGBR, Edition date: 201911, First-Printing

Pregnant women should always wear their seatbelt. The lap belt portion of a combination lap and shoulder seatbelt should be positioned low across the hips below the stomach and worn as tight as comfort will allow. The shoulder belt should be positioned to cross the middle of the shoulder and the center of the chest.

SEATBELT HEIGHT ADJUSTMENT

WARNING: Position the seatbelt height adjuster so that the belt rests across the middle of your shoulder. Failure to adjust the seatbelt correctly could reduce the effectiveness of the seatbelt and increase the risk of injury in a crash.

Front Seatbelt

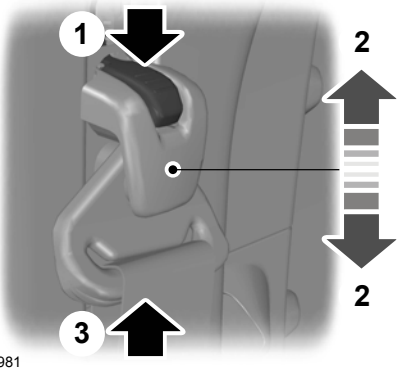

E143981

1. Support the seatbelt loop while pressing the adjuster button.
2. Slide the adjuster to the desired position then release the button.
3. Pull down on the seatbelt loop to make sure it is secure in position.

Rear Seatbelt (If Equipped)

WARNING: The occupant must make sure that the slider is above the line.

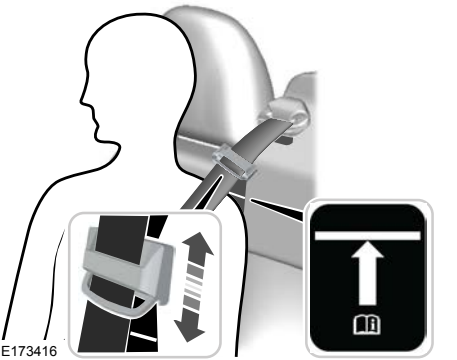
E173416

Adjust the lower edge of the slider so that it is above the white line.

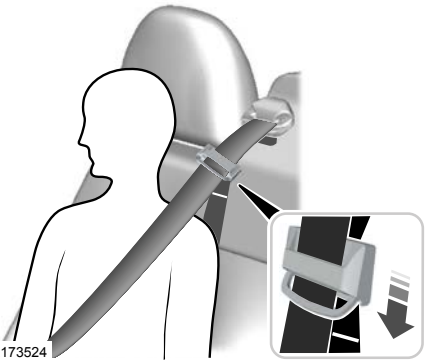
E173524

Transit (TTS) Vehicles Built From: 27-01-2020 Vehicles Built Up To: 20-09-2020, CG3796en enGBR, Edition date: 201911, First-Printing

If, when sitting upright, your shoulder is below the white line, you can adjust the slider to a position below the line so that the belt rests across the middle of your shoulder.

M2 Bus Rear Seatbelt with Non-Removable Head Restraints

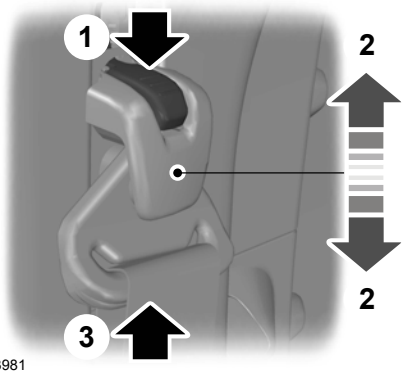

E143981

1. Support the seatbelt loop while pressing the adjuster button.
2. Slide the adjuster to the desired position then release the button.
3. Pull down on the seatbelt loop to make sure it is secure in position.

SEATBELT REMINDER

WARNING: The system will only provide protection when you use the seatbelt correctly.

The warning lamp illuminates and an audible warning sounds when the following conditions have been met:

- The driver seatbelt has not been fastened.
- Your vehicle exceeds a relatively low speed.

It also illuminates when the driver seatbelt is unfastened when your vehicle is moving.

If you do not fasten the driver seatbelt both the audible and visual warnings switch off automatically after approximately five minutes.

Turning the Seatbelt Reminder Off

Contact an authorized dealer.

Transit (TTS) Vehicles Built From: 27-01-2020 Vehicles Built Up To: 20-09-2020, CG3796en enGBR, Edition date: 201911, First-Printing

PRINCIPLE OF OPERATION

WARNING: Extreme Hazard! Do not use a rearward facing child restraint on a seat protected by an airbag in front of it!

WARNING: Do not modify the front of your vehicle in any way. This could adversely affect deployment of the airbags.

WARNING: Wear a safety belt and keep sufficient distance between yourself and the steering wheel. Only when you use the safety belt properly, can it hold you in a position that allows the airbag to achieve its optimum effect. See **Sitting in the Correct Position** (page 103).

WARNING: Repairs to the steering wheel, steering column, seats, airbags and safety belts must be carried out by an authorized dealer.

WARNING: Keep the areas in front of the airbags free from obstruction. Do not affix anything to or over the airbag covers.

WARNING: Do not puncture the seat with sharp objects. This could damage and adversely affect deployment of the airbags.

WARNING: Use seat covers designed for seats with side airbags. Have these fitted by an authorized dealer.

Note: *You will hear a loud bang and see a cloud of harmless powdery residue if an airbag deploys. This is normal.*

Note: *The front passenger airbag protects both positions of a double seat.*

Note: *Only wipe airbag covers with a damp cloth.*

DRIVER AIRBAG

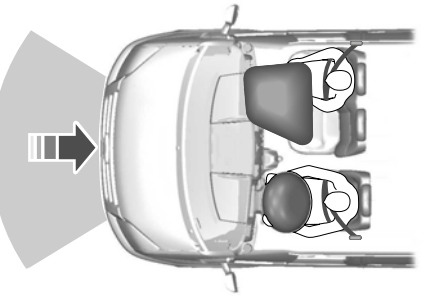

E268726

The airbag is designed to deploy during a significant frontal or near-frontal crash. The airbag inflates within a few thousandths of a second cushioning forward body movement and deflates on contact with the occupant. The airbag is not designed to deploy during a minor frontal crash, rear crash, side crash or a vehicle rollover.

Transit (TTS) Vehicles Built From: 27-01-2020 Vehicles Built Up To: 20-09-2020, CG3796en enGBR, Edition date: 201911, First-Printing

PASSENGER AIRBAG

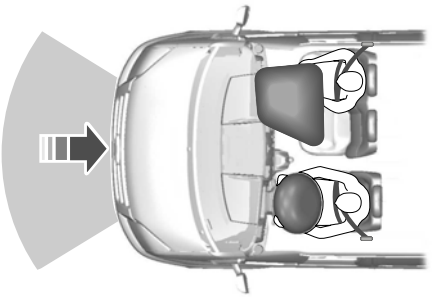

E268726

The airbag is designed to deploy during a significant frontal or near-frontal crash. The airbag inflates within a few thousandths of a second cushioning forward body movement and deflates on contact with the occupant. The airbag is not designed to deploy during a minor frontal crash, rear crash, side crash or a vehicle rollover.

SWITCHING THE PASSENGER AIRBAG ON AND OFF



E71313

The passenger airbag on and off indicators are close to the climate control unit.

Switching the Passenger Airbag Off

WARNING: You must switch the passenger airbag off when using a rearward facing child restraint on the front seat.

1. Using the information display controls on the steering wheel, select ***Settings***.
2. Select ***Vehicle settings***.
3. Select ***Passenger airbag***.
4. Select ***Off***.
5. Press and hold the ***OK*** button until a confirmation message appears in the information display.
6. Switch the ignition off and on and check that the passenger airbag off indicator illuminates.

Transit (TTS) Vehicles Built From: 27-01-2020 Vehicles Built Up To: 20-09-2020, CG3796en enGBR, Edition date: 201911, First-Printing

Note: *If it does not illuminate, this indicates a malfunction. Have your vehicle checked as soon as possible.*

Switching the Passenger Airbag On

WARNING: You must switch the passenger airbag on following the removal of the child restraint.

1. Using the information display controls on the steering wheel, select ***Settings***.
2. Select ***Vehicle settings***.
3. Select ***Passenger airbag***.
4. Select ***On***.
5. Press and hold the ***OK*** button until a confirmation message appears in the information display.
6. Switch the ignition off and on and check that the passenger airbag on indicator illuminates.

Note: *If it does not illuminate, this indicates a malfunction. Have your vehicle checked as soon as possible.*

SIDE AIRBAGS

WARNING: Do not place objects or mount equipment on or near the headliner at the siderail that may come into contact with a deploying curtain airbag. Failure to follow these instructions may increase the risk of personal injury in the event of a crash.

WARNING: Do not lean your head on the door. The side airbag could injure you as it deploys from the side of the seatback.

WARNING: Do not use accessory seat covers. The use of accessory seat covers may prevent the deployment of the side airbags and increase the risk of injury in an accident.

WARNING: Do not attempt to service, repair, or modify the supplementary restraint system or associated components. Failure to follow this instruction could result in personal injury or death.

WARNING: If a supplementary restraint system component has deployed, it will not function again. Have the system and associated components inspected as soon as possible. Failure to follow this instruction could result in personal injury or death.



E72658

The side airbags are on the outermost side of each front seat backrest. There is a label attached to the side of each backrest to indicate this.

Transit (TTS) Vehicles Built From: 27-01-2020 Vehicles Built Up To: 20-09-2020, CG3796en enGBR, Edition date: 201911, First-Printing



E152533

The side airbags are designed to inflate between the door panel and the occupant to enhance the protection in certain crashes.

The side airbags are designed to deploy during a significant lateral crash. They could also deploy during a significant frontal crash. The side airbags are not designed to deploy during a minor lateral or frontal crash, rear crash or a vehicle rollover.

Airbag Warning Lamp

If it does not illuminate when you switch the ignition on, continues to flash or remains on when the engine is running, this indicates a malfunction. Have your vehicle checked as soon as possible.

Airbag Secondary Warning Audible Warning

Sounds when the airbag warning lamp is not working.

SIDE CURTAIN AIRBAGS

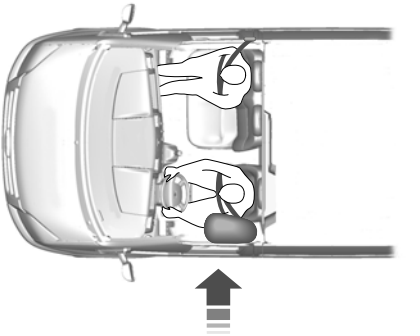

E68905

Side curtain airbags are located over both side windows where there are driver and front passenger seats. There are molded badges in the headlining above the side windows to indicate this.

The airbags will deploy during significant lateral collisions. They will also deploy during significant frontal angled collisions. The side curtain airbags will not deploy in minor lateral and frontal collisions, rear collisions or overturns.

Transit (TTS) Vehicles Built From: 27-01-2020 Vehicles Built Up To: 20-09-2020, CG3796en enGBR, Edition date: 201911, First-Printing

EMERGENCY ASSISTANCE

WARNING: Unless the Emergency Assistance setting is on prior to a collision, the system does not attempt to place an emergency call. This could delay the response time, increasing the risk of serious injury or death.

WARNING: For this feature to work, your mobile phone must be Bluetooth-enabled and compatible with the system.

WARNING: Always place your phone in a secure location in your vehicle so it does not become a projectile or get damaged in a crash. Failure to do so may cause serious injury to someone or damage the phone which could prevent Emergency Assistance from working properly.

Note: *Not all accidents activate the system. If an accident does trigger the system, it initiates a call to the emergency services. Do not wait for the system to initiate a call if you are able to do so. Call emergency services immediately to avoid a delayed response time. If you do not hear the system within five seconds of the accident, the system could be non-functional.*

If an accident results in an attempt to deploy an airbag, excluding knee airbags and rear inflatable seatbelts, or to shut off the fuel pump, the system initiates a call to the emergency services.

Note: *Before setting the feature on, please read the important notice about the Emergency Assistance feature and the Emergency Assistance privacy notice later in this section for important information.*

Note: *When you switch Emergency Assistance on or off, the settings apply to all paired mobile phones. If you switch Emergency Assistance off and a previously paired phone connects when you switch the ignition on, either a voice message plays, a display message or icon is shown or both.*

Note: *Every mobile phone operates differently. While Emergency Assistance works with most mobile phones, some mobile phones may experience difficulties using this feature.*

Note: *In the case of an emergency, the system, as a means of communication aid, can help you contact specific rescue departments of public emergency services. The system does not deploy the rescue operations. The local public emergency service deploys specific rescue operations according to the actual situation.*

To make sure that Emergency Assistance works correctly:

- The system must have power and be working correctly at the time of the crash and during feature activation and use.
- You must switch on the feature before a crash.
- You must have a cell phone connected to the system.
- In certain countries, it may be necessary to have a valid and registered SIM card with credit in order to place and maintain an emergency call.
- A connected cell phone must have the ability to make and maintain an outgoing call at the time of the crash.
- A connected cell phone must have adequate network coverage, battery power and signal strength.
- Your vehicle must have battery power.

Transit (TTS) Vehicles Built From: 27-01-2020 Vehicles Built Up To: 20-09-2020, CG3796en enGBR, Edition date: 201911, First-Printing

Note: *This feature only works in a country where Emergency Assistance can call the local emergency services. For additional information, please refer to the local Ford website.*

In the Event of a Crash

Before making a call:

- If you do not cancel the call, an introductory message plays for the emergency operator. After this message, there is hands-free communication between your vehicle's occupants and the operator.
- The system provides a short window of time (approximately 10 seconds) to cancel the call. If you do not cancel the call, the system initiates a call to the emergency services.
- The system plays a message letting you know when it attempts to make an emergency call. You can cancel the call by selecting the relevant button or by pressing the end call button on the steering wheel.

Note: *Not every crash deploys an airbag or triggers the fuel pump shut off, which may turn on Emergency Assistance. However, if Emergency Assistance is triggered, the system tries to contact the emergency services. If a connected cell phone sustains damage or loses connection to the system, it searches for and tries to connect to any available previously paired cell phone and initiates a call to the emergency services.*

During a call:

- Emergency Assistance uses your vehicle GPS or cellular network information when available to determine the most appropriate language to use. It alerts the emergency operator of the crash and delivers the introductory message. This may include your vehicle GPS coordinates.
- The language the system uses to interact with the occupants of your vehicle may differ from the language used to deliver information to the emergency operator.
- After the delivery of the introductory message the voice line opens so that you can speak hands-free with the emergency operator.
- When the line is connected, you must be prepared to provide your name, phone number and location information immediately.

Note: *While the system provides information to the emergency operator, the system plays a message letting you know it is sending important information. It then lets you know when the line is open to start hands-free communication.*

Note: *During an Emergency Assistance call, an emergency priority screen appears which contains vehicle GPS coordinates when available.*

Note: *It is possible that GPS location information is not available at the time of the crash; in this case, Emergency Assistance will still attempt to place an emergency call.*

Note: *It is possible that the emergency services will not receive the GPS coordinates; in this case, hands-free communication with an emergency operator is available.*

Transit (TTS) Vehicles Built From: 27-01-2020 Vehicles Built Up To: 20-09-2020, CG3796en enGBR, Edition date: 201911, First-Printing

Note: *The emergency operator may also receive information from the cellular network such as cell phone number, cell phone location and cell phone carrier name independent from Emergency Assistance.*

Emergency Assistance may not work if:

- Your cell phone or Emergency Assistance hardware sustains damage in the crash.
- The vehicle battery or the system has no power.
- A crash ejects your cell phone from your vehicle.
- You do not have a valid and registered SIM card with credit in your cell phone.
- You are in a country where Emergency Assistance cannot call the local emergency services. For additional information, please refer to the local Ford website.

Important Information About Emergency Assistance

Emergency Assistance does not currently call emergency services in the following countries:

- Albania.
- Armenia.
- Azerbaijan.
- Belarus.
- Bosnia and Herzegovina.
- Georgia.
- Macedonia.
- Moldova.
- Netherlands.
- Russia.
- Ukraine.

Emergency Assistance Privacy Notice

When you switch on Emergency Assistance, it may disclose to emergency services that your vehicle has been in a crash involving the deployment of an airbag or activation of the fuel pump shut off. This feature has the capability to disclose your location information to the emergency operator or other details about your vehicle or crash to provide the most appropriate emergency services.

If you do not want to disclose this information, do not switch on the feature.

Transit (TTS) Vehicles Built From: 27-01-2020 Vehicles Built Up To: 20-09-2020, CG3796en enGBR, Edition date: 201911, First-Printing

GENERAL INFORMATION ON RADIO FREQUENCIES

Note: *Changes or modifications not expressly approved by the party responsible for compliance could void the user's authority to operate the equipment.*

The typical operating range for your transmitter is approximately 10 m (33 ft).

A decrease in operating range could be caused by:

- weather conditions
- nearby radio towers
- structures around your vehicle
- other vehicles parked next to your vehicle.

The radio frequency used by your remote control can also be used by other radio transmitters, for example amateur radios, medical equipment, wireless headphones, wireless remote controls, cell phones, battery chargers and alarm systems. If the frequencies are jammed, you will not be able to use your remote control. You can lock and unlock the doors with the key.

Note: *Make sure your vehicle is locked before leaving it unattended.*

Note: *If you are in range, the remote control will operate if you press any button unintentionally.*

Note: *The remote control contains sensitive electrical components. Exposure to moisture or impact may cause permanent damage.*

REMOTE CONTROL - VEHICLES WITHOUT: POWER SLIDING DOOR

Your vehicle comes with a rechargeable remote control. The remote control battery automatically charges when the key is in the ignition and the engine is running. You should use all remote controls to drive your vehicle at least once every year, to prevent the remote control battery from losing charge.

Note: *The remote control battery cannot be replaced. Do not attempt to remove or replace the battery as this could cause damage to the key housing not covered by the vehicle Warranty.*

You can purchase replacement keys or remote controls from an authorized dealer.

Reprogramming the Unlocking Function

Note: *When you press the unlock button, either all the doors are unlocked or only the driver and passenger doors are unlocked. Pressing the unlock button again unlocks all the doors.*

Press and hold the unlock and lock buttons on the remote control simultaneously for at least four seconds with the ignition off. The direction indicators flash twice to confirm the change. To return to the original unlocking function, repeat the process.

REMOTE CONTROL - VEHICLES WITH: POWER SLIDING DOOR

Use the key blade to start your vehicle and unlock or lock the driver door from outside your vehicle. The buttons on the key operate the remote control function.

Transit (TTS) Vehicles Built From: 27-01-2020 Vehicles Built Up To: 20-09-2020, CG3796en enGBR, Edition date: 201911, First-Printing





Changing the Remote Control Battery

WARNING: Keep batteries away from children to prevent ingestion. Failure to follow this instruction could result in personal injury or death. If ingested, immediately seek medical attention.

WARNING: If the battery compartment does not securely close, stop using the remote control and replace it as soon as possible. In the meantime, keep the remote control away from children. Failure to follow this instruction could result in personal injury or death.

Make sure that you dispose of old batteries in an environmentally friendly way. Seek advice from your local authority about recycling old batteries.

The remote control uses one coin-type three-volt lithium battery CR2032 or equivalent.

1. Press the release button.



2. Insert a suitable tool, for example a screwdriver, in the position shown and gently push the clip.
3. Press the clip down to release the battery cover.

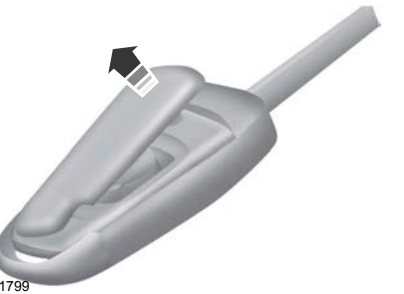

E151799

4. Carefully remove the cover.

Transit (TTS) Vehicles Built From: 27-01-2020 Vehicles Built Up To: 20-09-2020, CG3796en enGBR, Edition date: 201911, First-Printing



E151800

5. Insert a screwdriver in the position shown to release the battery.

Note: *Do not touch the battery contacts or the printed circuit board with the screwdriver.*



E151801

6. Remove the battery.
7. Insert a new battery with the **+** facing upward.

Note: *Do not wipe off any grease on the battery terminals or on the back surface of the circuit board.*

8. Reinstall the battery cover.

Locating Your Vehicle



Press the lock button on the key twice within three seconds. The direction indicators flash.

Remote Control Information Messages

Message	Action
Key battery low Replace soon	Displays when the remote control battery requires replacing.

REPLACING A LOST KEY OR REMOTE CONTROL

You can purchase replacement keys or remote controls from an authorized dealer. Authorized dealers can program remote controls for your vehicle. See **Remote Control** (page 40).

To re-program the passive anti-theft system see an authorized dealer.

Transit (TTS) Vehicles Built From: 27-01-2020 Vehicles Built Up To: 20-09-2020, CG3796en enGBR, Edition date: 201911, First-Printing

PRINCIPLE OF OPERATION

The system is designed to promote good driving behaviors using keys that you have programmed with some restricted settings.

MYKEY SETTINGS

Non-Configurable Settings

Seatbelt Reminder

The audio system mutes when the seatbelt reminder turns on. The seatbelt reminder cannot be switched off with a MyKey.

Early Low Fuel

The low fuel level warning lamp turns on earlier.

Driving and Parking Aids

Parking aids, blind spot information system and cross traffic alert turn on when you start the engine and cannot be switched off with a MyKey.

Pre-collision assist and lane keeping alert turn on when you start the engine, but can be switched off with a MyKey.

A new destination in the navigation system can only be set using voice commands, when using a MyKey and your vehicle is moving.

Configurable Settings

You can configure the following settings after creating a MyKey. See **Creating a MyKey** (page 44).

Speed Limit

WARNING: Do not set MyKey maximum speed limit to a limit that will prevent the driver from maintaining a safe speed considering posted speed limits and prevailing road conditions. The driver is always responsible to drive in accordance with local laws and prevailing conditions. Failure to do so could result in accident or injury.

You can set a speed limit for your vehicle. Warning messages appear in the information display and a tone sounds if your vehicle reaches the set speed. You cannot override the set speed when using a MyKey.

Speed Reminder

You can set a speed reminder for your vehicle. Warning messages appear in the information display and a tone sounds if your vehicle exceeds the set speed.

Audio System Volume Limit

The audio system maximum volume is reduced. A message appears in the information display if you attempt to exceed the volume limit. Automatic volume control turns off.

Emergency Assistance

If you set emergency assistance to be always on, it cannot be switched off with a MyKey.

Do Not Disturb

If you set do not disturb to be always on, it cannot be switched off with a MyKey.

Traction Control

If you set traction control to be always on, it cannot be switched off with a MyKey.

Transit (TTS) Vehicles Built From: 27-01-2020 Vehicles Built Up To: 20-09-2020, CG3796en enGBR, Edition date: 201911, First-Printing

CREATING A MYKEY

Switch the ignition on using an admin key.

To create a MyKey, use the information display controls on the steering wheel to select the following:

Menu Item	Action
Settings	Press the menu button.
MyKey	Press the ***OK*** button.
Create MyKey	Press and hold the ***OK*** button until a confirmation message appears in the information display.
	Switch the ignition off.

Note: *We recommend that you label this key.*

MyKey Information Messages

Message	Description
Key is already a MyKey	Displays when trying to create a MyKey with a key already designated as a MyKey.
Key restricted at next start. Label this key	Displays to confirm that the key is restricted after you switch the ignition off.

Switch the ignition on using an admin key.

PROGRAMMING A MYKEY

You can only program MyKeys to the same settings.

To program a MyKey, use the information display controls on the steering wheel to select the following:

Menu Item	Action
Settings	Press the menu button.
MyKey	Press the ***OK*** button. Select a setting and press the ***OK*** button. Configure the setting. Switch the ignition off.

Transit (TTS) Vehicles Built From: 27-01-2020 Vehicles Built Up To: 20-09-2020, CG3796en enGBR, Edition date: 201911, First-Printing

CLEARING ALL MYKEYS

When you clear all MyKeys, you remove all restrictions and return all MyKeys to their original admin key status.

Switch the ignition on using an admin key.

To clear all MyKeys, use the information display controls on the steering wheel to select the following:

Menu Item	Action
Settings	Press the menu button.
MyKey	Press the ***OK*** button.
Clear MyKeys	Press and hold the ***OK*** button until a confirmation message appears in the information display.

Transit (TTS) Vehicles Built From: 27-01-2020 Vehicles Built Up To: 20-09-2020, CG3796en enGBR, Edition date: 201911, First-Printing

CHECKING MYKEY SYSTEM STATUS

Switch the ignition on.

To find information about the distance traveled using a MyKey and also the number of admin keys and MyKeys created for your vehicle, use the information display controls on the steering wheel to select the following:

Menu Item	Action
Settings	Press the menu button.
MyKey	Press the ***OK*** button.
MyKey info	Press the ***OK*** button.

Transit (TTS) Vehicles Built From: 27-01-2020 Vehicles Built Up To: 20-09-2020, CG3796en enGBR, Edition date: 201911, First-Printing

USING MYKEY WITH REMOTE START SYSTEMS

The system is not compatible with non-Ford remote start systems.

MYKEY – TROUBLESHOOTING

What is an admin key?

- An admin key is a key that has not been created as a MyKey. See **Creating a MyKey** (page 44).

Why can I not create a MyKey?

- The key used to switch the ignition on is not an admin key.
- The key used to switch the ignition on is the only admin key. There always has to be at least one admin key.

Why can I not program a MyKey?

- The key used to switch the ignition on is not an admin key.
- No MyKeys are created. See **Creating a MyKey** (page 44).

Why can I not clear the MyKeys?

- The key used to switch the ignition on is not an admin key.
- No MyKeys are created. See **Creating a MyKey** (page 44).

Why does the MyKey distance not accumulate?

- The key used to start the engine is an admin key.
- No MyKeys are created. See **Creating a MyKey** (page 44).
- The MyKeys have been cleared.

Transit (TTS) Vehicles Built From: 27-01-2020 Vehicles Built Up To: 20-09-2020, CG3796en enGBR, Edition date: 201911, First-Printing

LOCKING AND UNLOCKING

Power Door Locks

The power door lock control is on the driver and front passenger door panels.


Press the button to unlock the front doors.


Press the button to lock all doors.

Door Lock Indicator

An LED on the power door lock control illuminates when you lock the door. It remains on for up to five minutes after you switch the ignition off.

Remote Control

You can only use the remote control when your vehicle is stationary.

Note: *When you leave your vehicle unattended for several weeks, the remote control turns off. Unlocking and starting your vehicle once enables the remote control.*

Unlocking the Doors


Press the button to unlock the front doors. One long flash of the direction indicators confirms that your vehicle has unlocked.

Note: *You can unlock the driver door with the key. Use the key if the remote control does not operate. Turn the top of the key toward the rear of your vehicle.*

Unlocking the Cargo Doors


Press the button on the remote control once to unlock the rear cargo doors. Press the button again within two seconds to unlock all cargo doors.

Double Locking the Doors

WARNING: Do not use double locking when passengers or animals are inside your vehicle. The doors cannot be unlocked or opened from the inside when double locked.

Double locking is a theft protection feature that prevents someone from opening the doors from the inside.

Note: *If you double lock your vehicle while inside, switch the ignition on to return the door locks to a single locked state.*


Press the button twice within three seconds. The direction indicators will flash.

Note: *You can double lock your vehicle with the key. Turn the key to the lock position twice within three seconds. Use the key when the remote control is not functioning.*

Reprogramming the Unlocking Function

Note: *When you press the unlock button, either all the doors are unlocked or only the driver or driver and passenger doors are unlocked.*

You can reprogram the unlocking function so that all doors are unlocked.

Press and hold the unlock and lock buttons on the remote control simultaneously for at least four seconds with the ignition off. The direction indicators flash twice to confirm the change.

To return to the original unlocking function, repeat the process.

You can also change between the unlocking modes in the information display.

Transit (TTS) Vehicles Built From: 27-01-2020 Vehicles Built Up To: 20-09-2020, CG3796en enGBR, Edition date: 201911, First-Printing

1. Using the information display controls on the steering wheel, select ***Settings***.
2. Select ***Vehicle settings***.
3. Select ***Locks***.
4. Select ***Unlocking***.
5. Select ***All doors*** or ***Driver's door***.

Locking and Unlocking the Doors From Inside

Use the power door lock control to lock or unlock the doors from inside.

You can see the door lock status in the instrument panel. The lamp illuminates when you lock your vehicle.

Opening the Double Rear Doors



E148805

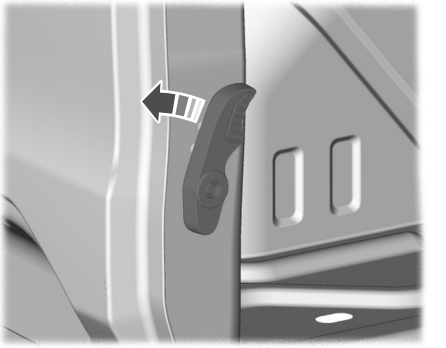

E148806

Fully Opening the Double Rear Doors

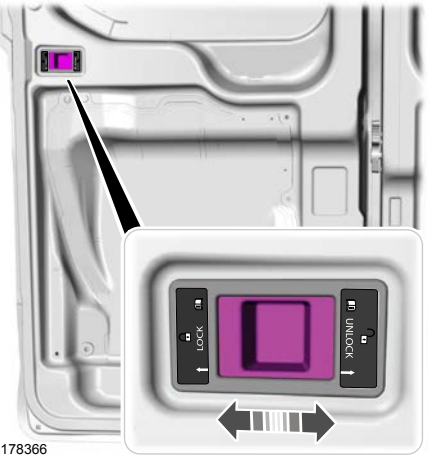

E178366

Slide the lever to release the catch and open the double rear doors fully.

Transit (TTS) Vehicles Built From: 27-01-2020 Vehicles Built Up To: 20-09-2020, CG3796en enGBR, Edition date: 201911, First-Printing

Slam Locking

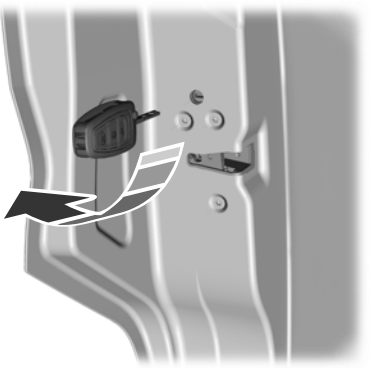

E171967

When there is no power to your vehicle, slam locking allows you to lock a door automatically when you close it. You can manually lock the front passenger door, sliding doors and rear cargo door using the key.

Note: *Do not leave the keys in your vehicle.*

Note: *The horm may sound if you try to lock the doors when a door is still open.*

Autolock (If Equipped)

Autolock locks all the doors when all of the following occur:

- All doors are closed.
- The ignition is on.
- You shift into any gear putting your vehicle in motion.
- Your vehicle speed exceeds a predetermined limit.

You can turn this function on using the information display.

1. Using the information display controls on the steering wheel, select ***Settings***.
2. Select ***Vehicle settings***.
3. Select ***Locks***.
4. Switch ***Auto lock*** on and off.

Note: *If you have turned this function on, either use the interior door unlock button or switch the ignition off and use the key or remote control to unlock the rear or sliding door.*

Automatic Re-Locking

The doors will re-lock automatically if you do not open a door within 45 seconds of unlocking the doors with the remote control. The door locks and the alarm will return to their previous state.

Autounlock

Autounlock unlocks all the doors when all of the following occur:

- The ignition is on, all the doors are closed, and your vehicle speed exceeds a predetermined limit.
- Your vehicle comes to a stop.
- You open the driver door within 10 minutes of switching the ignition off or to accessory.

You can turn this function on using the information display.

1. Using the information display controls on the steering wheel, select ***Settings***.
2. Select ***Vehicle settings***.
3. Select ***Locks***.
4. Switch ***Auto unlock*** on and off.

Configurable Unlocking

Configurable unlocking is set at the time of vehicle purchase. It allows you to select which doors unlock when you press the unlock button or the cargo area unlock button on your remote control once or twice. You cannot switch this feature back on if you have had it switched off. See an authorized dealer for further information.

Transit (TTS) Vehicles Built From: 27-01-2020 Vehicles Built Up To: 20-09-2020, CG3796en enGBR, Edition date: 201911, First-Printing

Rear Emergency Exit

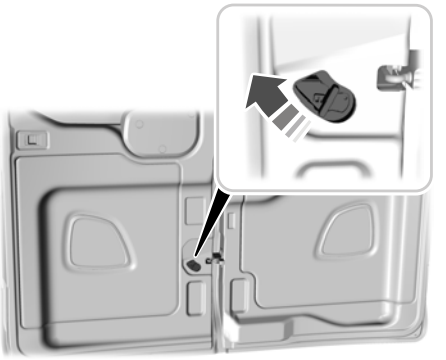

E171968

Pull the interior handle up to open the door in an emergency.

Transit (TTS) Vehicles Built From: 27-01-2020 Vehicles Built Up To: 20-09-2020, CG3796en enGBR, Edition date: 201911, First-Printing

SLIDING DOOR PRECAUTIONS

WARNING: Fully close the sliding door before driving, to prevent passengers and cargo from falling out. Failure to follow this instruction could result in personal injury or death.

WARNING: Do not open or close the sliding door when your hands are near the tracks or rollers. Failure to follow this instruction could result in personal injury.

Note: *Do not leave the sliding door open when you are driving. This could damage the sliding door and its components.*

OPENING THE SLIDING DOOR

Opening the Sliding Door From Inside Your Vehicle

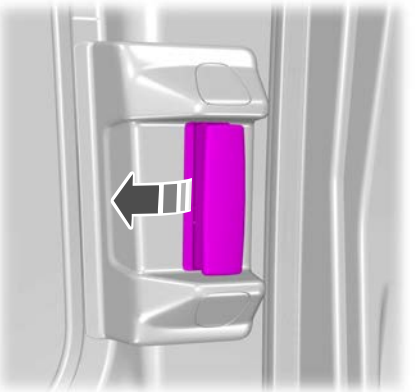

Pull the interior door handle to open the sliding door.

Opening the Sliding Door From Outside Your Vehicle

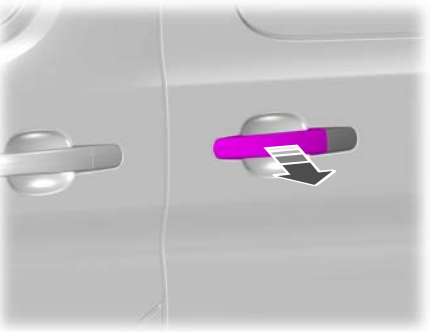

Pull the exterior door handle to open the sliding door.

CLOSING THE SLIDING DOOR

Closing the Sliding Door From Inside Your Vehicle

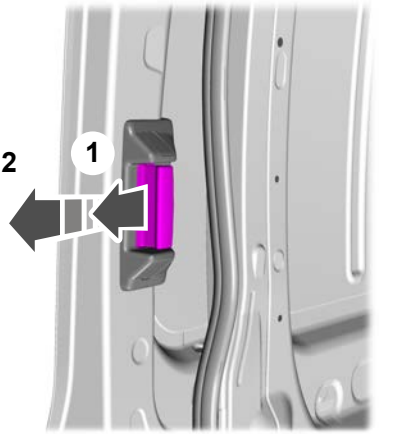

E171966

Transit (TTS) Vehicles Built From: 27-01-2020 Vehicles Built Up To: 20-09-2020, CG3796en enGBR, Edition date: 201911, First-Printing

1. Pull the interior door handle to release the door check feature.
2. Slide the door to close.

Closing the Sliding Door From Outside Your Vehicle

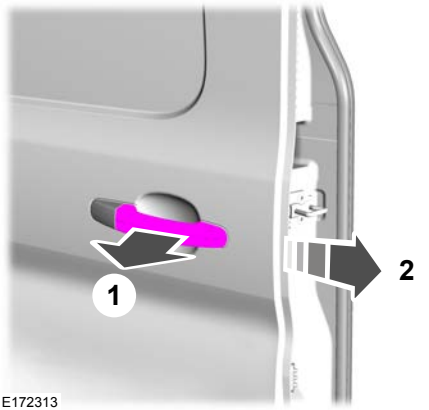

E172313

1. Pull the exterior door handle to release the door check feature.
2. Slide the door to close.

Transit (TTS) Vehicles Built From: 27-01-2020 Vehicles Built Up To: 20-09-2020, CG3796en enGBR, Edition date: 201911, First-Printing

SLIDING DOOR PRECAUTIONS

WARNING: Fully close the power sliding door before driving, to prevent passengers and cargo from falling out. Failure to follow this instruction could result in personal injury or death.

WARNING: Do not open or close the power sliding door when your hands are near the tracks or rollers. Failure to follow this instruction could result in personal injury.

WARNING: When closing the power sliding door, verify that it is free of obstruction and make sure that people and pets are not in the proximity of the sliding door opening.

Note: *Do not leave the sliding door open when you are driving. This could damage the sliding door and its components.*

Note: *If you operate the sliding door often during a short period of time, the system could become not available for a certain time to prevent damage due to overheating.*

Allow the system to open the sliding door. Do not manually push or pull the sliding door when it is moving. This could damage the sliding door and its components.

OPENING THE SLIDING DOOR

Opening the Sliding Door From Inside Your Vehicle

Opening the Sliding Door From Inside Your Vehicle Using the Instrument Panel Button

Press the button on the instrument panel to open the sliding door.

Opening the Sliding Door From Inside Your Vehicle Using the Sliding Door Handle

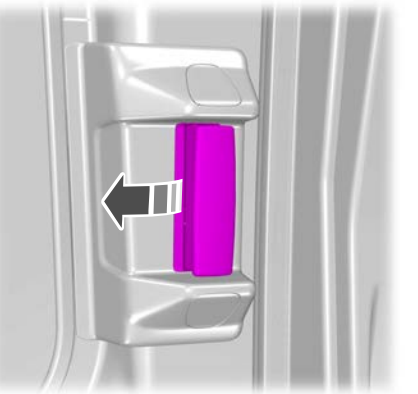

Pull and release the door handle to open the sliding door.

Opening the Sliding Door From Inside Your Vehicle in an Emergency - M2 Bus

The emergency release lever is located on the C-Pillar.

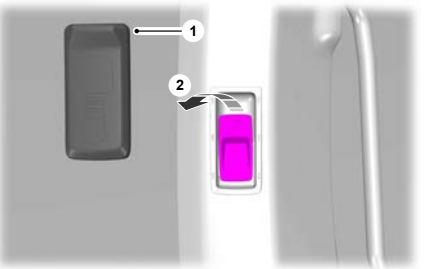

1. Carefully remove the cover.

Transit (TTS) Vehicles Built From: 27-01-2020 Vehicles Built Up To: 20-09-2020, CG3796en enGBR, Edition date: 201911, First-Printing

2. Pull the release lever.
3. Manually open the sliding door.

Opening the Sliding Door From Outside Your Vehicle

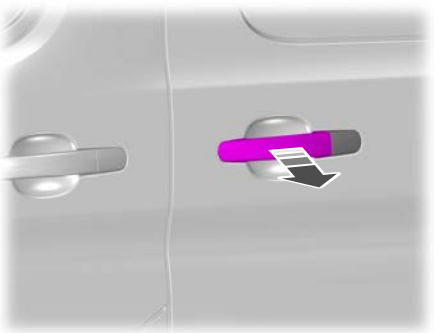

Pull and release the exterior door handle to open the sliding door.

Opening the Sliding Door With the Remote Control

Press the button on the remote control twice within three seconds.

CLOSING THE SLIDING DOOR

Closing the Sliding Door From Inside Your Vehicle

Closing the Sliding Door From Inside Your Vehicle Using the Instrument Panel Button

Press the button on the instrument panel to close the sliding door. A tone sounds when the sliding door begins to close.

Closing the Sliding Door From Inside Your Vehicle Using the Sliding Door Handle

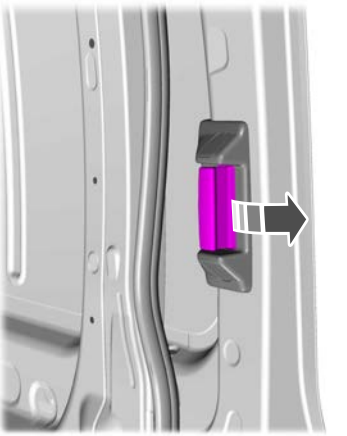

Pull and release the interior sliding door handle to close the sliding door.

Transit (TTS) Vehicles Built From: 27-01-2020 Vehicles Built Up To: 20-09-2020, CG3796en enGBR, Edition date: 201911, First-Printing

Closing the Sliding Door From Outside Your Vehicle

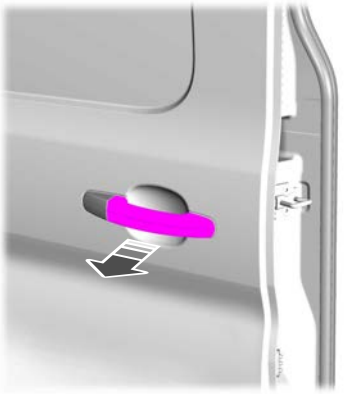

Pull and release the exterior door handle to close the sliding door.

Closing the Sliding Door With the Remote Control

Press the button on the remote control twice within three seconds. A tone sounds when the sliding door begins to close.

STOPPING THE SLIDING DOOR MOVEMENT

You can stop the sliding door movement by doing any of the following:

- Pressing the sliding door button on the remote control twice within three seconds.
- Pressing the sliding door button on the instrument panel.
- Pulling the sliding door interior or exterior door handle.

RESETTING THE POWER SLIDING DOOR

Make sure that you complete the procedure within 10 seconds.

To reset the power sliding door do the following:

1. Manually close the sliding door.

Note: *Make sure that the sliding door is fully closed.*

2. Pull the interior door handle in closing direction three times within three seconds.

Transit (TTS) Vehicles Built From: 27-01-2020 Vehicles Built Up To: 20-09-2020, CG3796en enGBR, Edition date: 201911, First-Printing

SLIDING DOOR – TROUBLESHOOTING

Sliding Door – Information Messages

Message	Action
Right power sliding door Calibration needed	The system has malfunctioned. Manually close the power sliding door. Pull and release the power sliding door handle to open the power sliding door. If the message continues to appear, have your vehicle checked as soon as possible.
Left power sliding door Calibration needed	
Right rear door motor disconnected See manual	The system has malfunctioned. Reset the power sliding door. See **Resetting the Power Sliding Door** (page 56). If the message continues to appear, have your vehicle checked as soon as possible.
Left rear door motor disconnected See manual	

Transit (TTS) Vehicles Built From: 27-01-2020 Vehicles Built Up To: 20-09-2020, CG3796en enGBR, Edition date: 201911, First-Printing

Sliding Door – Frequently Asked Questions

Why does the power sliding door stop moving?

The power sliding door stops when it detects an obstacle. A tone sounds and the power sliding door starts moving in the opposite direction. After you remove the obstacle, you can continue to operate the power sliding door.

Why is the power sliding door moving with reduced speed?

You let the power sliding door open for more than five minutes. Fully close the power sliding door using the button on the instrument panel or the power sliding door handles. Open the power sliding door as normal.

Why can I not close the power sliding door?

If the power sliding door does not close, restart the engine and then close it as normal. See **Closing the Sliding Door From Inside Your Vehicle** (page 55). If the power sliding door still does not close, manually close the power sliding door and then open it as normal. If the power sliding door still does not close the system has malfunctioned. Have your vehicle checked as soon as possible.

What can I do if the power sliding door does not operate as normal?

If there is a malfunction on the power sliding door, restart the engine.

How can I open the sliding door if the system loses power?

If the sliding door loses power, you could need to apply more force when trying to open it. Push the back of the sliding door and the interior sliding door handle in opening direction at the same time and open it as normal.

Transit (TTS) Vehicles Built From: 27-01-2020 Vehicles Built Up To: 20-09-2020, CG3796en enGBR, Edition date: 201911, First-Printing

PASSIVE ANTI-THEFT SYSTEM

Principle of Operation

The system prevents someone from starting the engine with an incorrectly coded key.

Note: *Always take your keys and lock all doors when leaving your vehicle.*

Coded Keys

If you lose a key, you can obtain a replacement from an authorized dealer. If possible, provide them with the key number from the tag provided with the original keys. You can also obtain extra keys from an authorized dealer.

Note: *Have all of your remaining keys erased and recoded if you lose a key. Have replacement keys coded together with recoding your remaining keys. Ask an authorized dealer for more information.*

Note: *Metallic objects, electronic devices or a second coded key on the same key chain may result in vehicle starting problems, especially if they are too close to the key when starting your vehicle.*

Arming the Engine Immobilizer

The engine immobilizer arms after a short period of time when you switch the ignition off.

Disarming the Engine Immobilizer

The engine immobilizer disarms when you switch the ignition on with a correctly coded key.

If you are unable to start your vehicle with a correctly coded key, have your vehicle checked by an authorized dealer.

ANTI-THEFT ALARM - VEHICLES WITHOUT: ANTI-THEFT ALARM HORN WITH INTEGRAL BATTERY

Alarm System

The perimeter alarm is a deterrent against unauthorized access to your vehicle through the doors, luggage compartment and the hood.

Triggering the Alarm

Once armed, the alarm is triggered in any of the following ways:

- If someone opens a door, cargo area or the hood without a valid key or remote control.
- If you switch the ignition on without a valid key.

If the alarm is triggered, the horn will sound for 30 seconds and the hazard warning flasher will flash for five minutes.

Any further attempts to perform one of the above will trigger the alarm again.

Arming the Alarm

To arm the alarm, lock your vehicle. See **Doors and Locks** (page 48).

Disarming the Alarm

Disarm and silence the alarm by unlocking the doors with the key and switching the ignition on with a correctly coded key within 12 seconds, or by unlocking the doors or the cargo area with the remote control.

Transit (TTS) Vehicles Built From: 27-01-2020 Vehicles Built Up To: 20-09-2020, CG3796en enGBR, Edition date: 201911, First-Printing

ANTI-THEFT ALARM - VEHICLES WITH: ANTI-THEFT ALARM HORN WITH INTEGRAL BATTERY

Alarm System

Your vehicle may have one of the following alarm systems:

- Category one alarm with interior sensors and battery back-up sounder.
- Perimeter alarm.

Perimeter Alarm

The perimeter alarm is a deterrent against unauthorized access to your vehicle through the doors and the hood.

Interior Sensors (If Equipped)

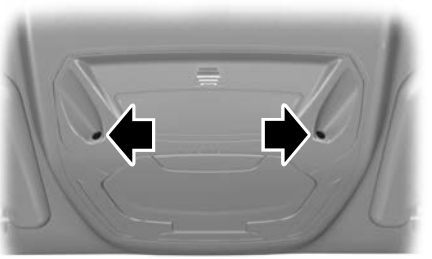

E131656

Note: *Do not cover up the interior scanning sensors.*

The sensors act as a deterrent against unauthorized intrusion by sensing any movement within your vehicle.

Battery Back-up Sounder

The battery back-up sounder is an additional alarm system this will sound a siren when the alarm is triggered. When you lock your vehicle the system is armed. The sounder has its own battery and will sound an alarm siren even if someone disconnects your vehicle battery or the battery back-up sounder itself.

Triggering the Alarm

Once armed, the alarm is triggered in any of the following ways:

- If someone opens a door or the hood without a valid key or remote control.
- If you switch the ignition on without a valid key.
- If the interior sensors detect movement within your vehicle.
- On vehicles with a battery back-up sounder, if someone disconnects your vehicle battery or the battery back-up sounder itself.

If the alarm is triggered, the alarm horn will sound for 30 seconds and the hazard warning flashers will flash for five minutes.

Any further attempts to perform one of the above will trigger the alarm again.

Guard Settings

Note: *Do not arm the alarm with full guard if passengers, animals or other moving objects are inside your vehicle, as this could trigger the alarm.*

Transit (TTS) Vehicles Built From: 27-01-2020 Vehicles Built Up To: 20-09-2020, CG3796en enGBR, Edition date: 201911, First-Printing

Message	Description
Full guard	The interior sensors are on when you arm the alarm.
Reduced	The interior sensors are off when you arm the alarm. You can set the alarm to reduced guard for the current ignition cycle only. The alarm will reset to full guard the next time you switch the ignition on.
Ask on exit	You can set the information display to ask you each time which level of guard you wish to set. A message appears in the information display each time you switch the ignition off. If you wish to arm the alarm with reduced guard, press the **OK** button when this message appears. If you wish to arm the alarm with full guard, leave your vehicle without pressing the **OK** button.

Selecting Full or Reduced Guard

Note: *Selecting reduced guard does not set the alarm permanently to reduced guard. It sets it to reduced guard only for the current ignition cycle. If you regularly set the alarm to reduced guard, select the option to ask when you exit.*

You can select full or reduced guard using the information display. See **Information Displays** (page 89).

Arming the Alarm

To arm the alarm, lock your vehicle. See **Doors and Locks** (page 48).

Disarming the Alarm

Perimeter Alarm

Disarm and silence the alarm by unlocking the doors with the key and switching the ignition on with a correctly coded key or unlocking the doors with the remote control.

Category One Alarm

Disarm and silence the alarm by unlocking the doors with the key and switching the ignition on with a correctly coded key within 12 seconds or unlocking the doors with the remote control.

Transit (TTS) Vehicles Built From: 27-01-2020 Vehicles Built Up To: 20-09-2020, CG3796en enGBR, Edition date: 201911, First-Printing

USING POWER RUNNING BOARDS

WARNING: In extreme climates, excessive ice buildup may occur, causing the running boards not to deploy. Make sure that the running boards have deployed, and have finished moving before attempting to step on them. The running boards will resume normal function once the blockage is cleared.

WARNING: Switch off the running boards before jacking or placing any object under your vehicle. Never place your hand between the extended running board and your vehicle. A moving running board may cause injury.

Note: *Do not use the power running boards, front and rear hinge assemblies, running board motors or the running board underbody mounts to lift your vehicle when jacking. Always use proper jacking points.*

Note: *The power running boards may operate more slowly in cool temperatures.*

Note: *The running board mechanism may trap debris such as mud, dirt, snow, ice and salt. This may cause unwanted noise. If this happens, manually set the power running boards to the deployed position. Then wash the system in particular the front and rear hinge arms with a high-pressure car wash wand.*

Note: *If you drive off when the power running boards are deployed the engine may stop.*

Note: *In the event of a malfunction you can stow the power running boards manually.*

Automatic Power Deploy

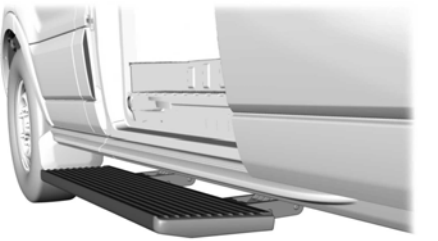

E171469

The power running board extends when you open the door.

Automatic Power Stow



E171470

When you close the door, the power running board returns to the stowed position after a two-second delay.

Transit (TTS) Vehicles Built From: 27-01-2020 Vehicles Built Up To: 20-09-2020, CG3796en enGBR, Edition date: 201911, First-Printing

Manual Power Deploy

To set the power running boards to the deployed position, use the information display controls on the steering wheel to select the following:

Message	Action
Settings	Press the menu button.
Vehicle settings	Press the ***OK*** button.
Power step	Press the ***OK*** button.
Out	Press the ***OK*** button.

Enabling and Disabling

To enable or disable the power running board feature, use the information display controls on the steering wheel to select the following:

Message	Action and Description
Settings	Press the menu button.
Vehicle settings	Press the ***OK*** button.
Power step	Press the ***OK*** button.
Select one of the following:	
Off	Press the ***OK*** button. When disabled the power running boards move to the stowed position regardless of the door position.
Auto	Press the ***OK*** button. When enabled the power running boards move to the correct position based on the door position.

When you switch the ignition on, the system turns on.

Bounce-back

The running board will reverse direction and move to the end of travel if it encounters an object while moving.

Manual Operation - Excluding: Turkey

If the power running board does not return to the stowed position, you can manually stow it.

Transit (TTS) Vehicles Built From: 27-01-2020 Vehicles Built Up To: 20-09-2020, CG3796en enGBR, Edition date: 201911, First-Printing

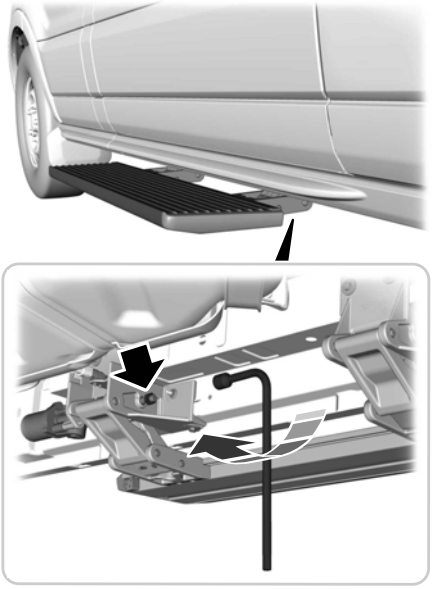

E171471

Insert the lug wrench into the guide hole and turn the handle clockwise until the running board is in the stowed position.

Manual Operation - Turkey

If the power running board does not return to the stowed position, you can manually stow it.

Push the running board to return it to the stowed position.

Resetting the System

You can reset the system by opening and closing the sliding door.

Transit (TTS) Vehicles Built From: 27-01-2020 Vehicles Built Up To: 20-09-2020, CG3796en enGBR, Edition date: 201911, First-Printing

ADJUSTING THE STEERING WHEEL

WARNING: Do not adjust the steering wheel when your vehicle is moving.

Note: *Make sure that you are sitting in the correct position. See* ***Sitting in the Correct Position*** *(page 103).*

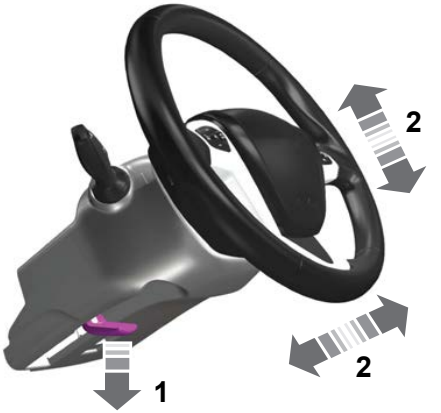

E95178

1. Unlock the steering column.
2. Adjust the steering wheel to the desired position.



E95179

3. Lock the steering column.

LOCKING THE STEERING WHEEL

1. Remove the key from the ignition.
2. Slightly rotate the steering wheel to engage the lock.

Unlocking the Steering Wheel

WARNING: Always check that the steering is unlocked before attempting to move your vehicle.

1. Insert the key in the ignition.
2. Turn the key to position ***I***.

Note: *You may have to slightly rotate the steering wheel to assist unlocking it.*

Transit (TTS) Vehicles Built From: 27-01-2020 Vehicles Built Up To: 20-09-2020, CG3796en enGBR, Edition date: 201911, First-Printing

WINDSHIELD WIPERS



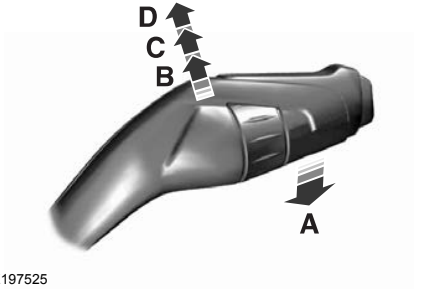

E197525

A Single wipe.
B Intermittent wipe.
C Normal wipe.
D High-speed wipe.

Note: *Fully defrost the windshield before you switch the windshield wipers on.*

Note: *Make sure that you switch the windshield wipers off before entering a car wash.*

Note: *If streaks or smears appear on the windshield, clean the windshield and the wiper blades. See* ***Checking the Wiper Blades*** *(page 261). If that does not resolve the issue, install new wiper blades. See* ***Changing the Front Wiper Blades*** *(page 261).*

Note: *Do not operate the wipers on a dry windshield. This may scratch the glass or damage the wiper blades. Always use the windshield washers before wiping a dry windshield.*

Intermittent Wipe

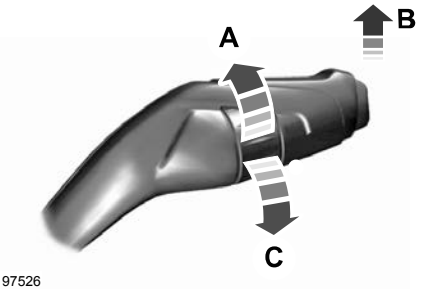

E197526

A Short wipe interval.
B Intermittent wipe.
C Long wipe interval.

Use the rotary control to adjust the intermittent wipe interval.

Note: *When your vehicle speed increases, the interval between intermittent wipes may decrease.*

AUTOWIPERS

Autowipers uses a rain sensor in the area around the interior mirror. The wipers operate when the rain sensor detects water on the windshield in front of it. The rain sensor continues to monitor the amount of water and adjusts the speed of the wipers.

Note: *The wipers remain in a slightly raised position during operation and only return to the park position a short time after the rain sensor detects no water on the windshield.*

You can switch autowipers on or off in the information display.

Note: *If you switch autowipers off in the information display, the windshield wipers operate in intermittent mode.*

Transit (TTS) Vehicles Built From: 27-01-2020 Vehicles Built Up To: 20-09-2020, CG3796en enGBR, Edition date: 201911, First-Printing

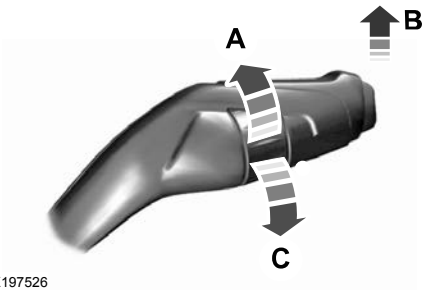

A High sensitivity.

B Autowipers on.

C Low sensitivity.

Move the wiper lever upward to the first position to switch autowipers on.

Use the rotary control to adjust the sensitivity of the autowipers. When you select low sensitivity, the wipers operate when the sensor detects a large amount of water on the windshield. When you select high sensitivity, the wipers operate when the sensor detects a small amount of water on the windshield.

Note: *Keep the outside of the windshield clean. The rain sensor is very sensitive and the wipers may operate if dirt, mist or insects hit the windshield.*

If you leave autowipers on, it may not operate when you switch the ignition on during freezing temperatures. This is because the system has deactivated the rain sensor to prevent damage to the windshield wipers. Defrost the windshield before reactivating the rain sensor. You can reactivate the rain sensor by moving the rotary control or switching autowipers off and on.

Note: *Fully defrost the windshield before you switch the windshield wipers on.*

Note: *Make sure that you switch the windshield wipers off before entering a car wash.*

Wet or winter weather conditions could cause unexpected wiping or smearing.

To keep the windshield clear:

- Lower the sensitivity of the autowipers to reduce the amount of smearing on the windshield.
- Switch autowipers off.

Note: *If streaks or smears appear on the windshield, clean the windshield and the wiper blades. See* ***Checking the Wiper Blades*** *(page 261). If that does not resolve the issue, install new wiper blades. See* ***Changing the Front Wiper Blades*** *(page 261).*

Settings

To switch autowipers on or off, use the information display controls on the steering wheel to select the following:

Menu Item	Action
Settings	Press the menu button.
Vehicle settings	Press the ***OK*** button.
Wipers	Press the ***OK*** button.
Rain sensing	Press the ***OK*** button.

Transit (TTS) Vehicles Built From: 27-01-2020 Vehicles Built Up To: 20-09-2020, CG3796en enGBR, Edition date: 201911, First-Printing

WINDSHIELD WASHERS

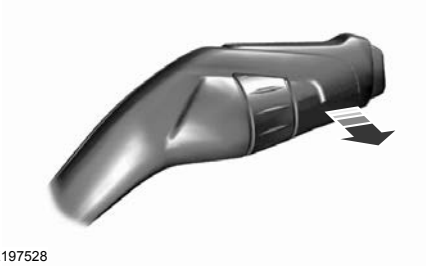

E197528

Pull the lever toward you to operate the windshield washers. When you release the lever, the wipers operate for a short time. A courtesy wipe occurs a short time after the wipers stop to clear any remaining washer fluid.

You can switch courtesy wipe on or off in the information display.

Note: *Do not operate the washers when the washer reservoir is empty. This could cause the washer pump to overheat.*

Settings

To switch courtesy wipe on or off, use the information display controls on the steering wheel to select the following:

Menu Item	Action
Settings	Press the menu button.
Vehicle settings	Press the ***OK*** button.
Wipers	Press the ***OK*** button.
Courtesy wipe	Press the ***OK*** button.

Transit (TTS) Vehicles Built From: 27-01-2020 Vehicles Built Up To: 20-09-2020, CG3796en enGBR, Edition date: 201911, First-Printing

REAR WINDOW WIPER AND WASHERS

Rear Window Wiper



E171615

A Intermittent wipe.
B Continuous wipe.
C Rear window wiper off.

The rear window wiper also turns on when you shift into reverse and the windshield wipers are on.

You can switch reverse wipe off in the information display.

Note: *Make sure that you switch the rear window wiper off before entering a car wash.*

Settings

To switch reverse wipe on or off, use the information display controls on the steering wheel to select the following:

Menu Item	Action
Settings	Press the menu button.
Vehicle settings	Press the ***OK*** button.
Wipers	Press the ***OK*** button.
Reverse wiper	Press the ***OK*** button.

Rear Window Washer

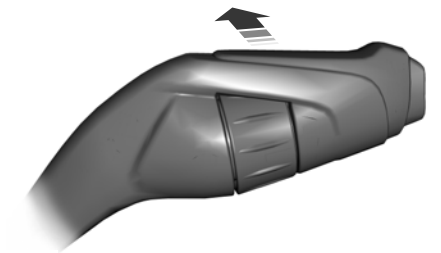
E167407

Push the lever away from you to operate the rear window washer. When you release the lever, the wiper operates for a short time.

Note: *Do not operate the washers when the washer reservoir is empty. This could cause the washer pump to overheat.*

Transit (TTS) Vehicles Built From: 27-01-2020 Vehicles Built Up To: 20-09-2020, CG3796en enGBR, Edition date: 201911, First-Printing

GENERAL INFORMATION

Condensation in the Exterior Front Lamps and Rear Lamps

Exterior front lamps and rear lamps have vents to accommodate normal changes in air pressure.

Condensation can be a natural by-product of this design. When moist air enters the lamp assembly through the vents, there is a possibility that condensation can occur when the temperature is cold. When normal condensation occurs, a fine mist can form on the interior of the lens. The fine mist eventually clears and exits through the vents during normal operation.

Clearing time may take as long as 48 hours under dry weather conditions.

Examples of acceptable condensation are:

- The presence of a fine mist (no streaks, drip marks or large droplets).
- A fine mist covers less than 50% of the lens.

Examples of unacceptable condensation are:

- A water puddle inside the lamp.
- Streaks, drip marks or large droplets present on the interior of the lens.

If you see any unacceptable condensation, have your vehicle checked by an authorized dealer.

LIGHTING CONTROL

Lighting Control Positions

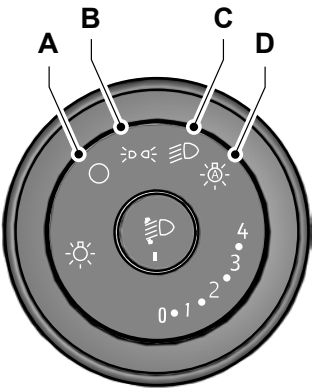

A Lamps off.

B Parking lamps, instrument panel lamps and license plate lamps.

C Headlamps.

D Autolamps. See **Autolamps** (page 71).

Switching the Parking Lamps On

1. Switch the ignition off.
2. Set the lighting control to the parking lamps position.

Note: *Parking lamps could turn off to prevent the vehicle battery from running out of charge.*

Transit (TTS) Vehicles Built From: 27-01-2020 Vehicles Built Up To: 20-09-2020, CG3796en enGBR, Edition date: 201911, First-Printing

Switching High Beam Headlamps On and Off



E163718

Push the lever away from you to switch the high beam headlamps on.

Push the lever forward again or pull the lever toward you to switch the high beam headlamps off.

Note: *If you switch the autolamps on, you cannot switch the high beam headlamps on until the system turns the headlamps on.*

Flashing High Beam Headlamps



E163719

Pull the lever toward you and release it to flash the high beam headlamps.

High Beam Headlamp Indicator



It illuminates when you switch the high beam headlamps on.

Lamps On Indicator



It illuminates when you switch the low beam headlamps or the side and rear lamps on.

Exterior Lamps On Audible Warning

Sounds when you open the driver door and the exterior lamps are on.

AUTOLAMPS

WARNING: The system does not relieve you of your responsibility to drive with due care and attention. You may need to override the system if it does not turn the headlamps on in low visibility conditions, for example daytime fog.

Autolamps turn the headlamps on in low light situations or when the wipers operate.

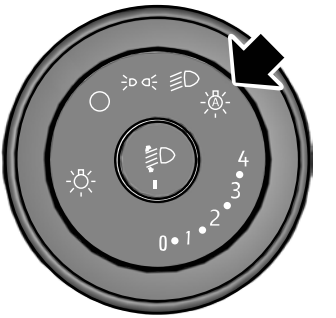

Note: *When you switch the autolamps on, the headlamps turn on within 10 seconds of switching the wipers on.*

Note: *If you switch the autolamps and the autowipers on, the headlamps turn on when the windshield wipers continuously operate.*

Note: *The headlamps turn off approximately 60 seconds after you switch the wipers off.*

Transit (TTS) Vehicles Built From: 27-01-2020 Vehicles Built Up To: 20-09-2020, CG3796en enGBR, Edition date: 201911, First-Printing

The headlamps remain on for a period of time after you switch the ignition off. Use the information display controls to adjust the period of time that the headlamps remain on.

Adjusting the Period of Time That the Headlamps Remain On

1. Using the information display controls on the steering wheel, select ***Settings***.
2. Select ***Vehicle settings***.
3. Select ***Lighting***.
4. Select ***Headlamp delay***.
5. Select a setting.
6. Press the ***OK*** button.

INSTRUMENT LIGHTING DIMMER

The instrument lighting dimmer buttons are on the lighting control.



Repeatedly press one of the buttons to adjust the brightness.

HEADLAMP EXIT DELAY

After you switch the ignition off, you can switch the headlamps on by pulling the direction indicator lever toward you. You will hear a short tone. The headlamps will switch off automatically after three minutes with any door open or 30 seconds after the last door has been closed. You can cancel this feature by pulling the direction indicator toward you again or switching the ignition on.

AUTOMATIC HIGH BEAM CONTROL

WARNING: The system does not relieve you of your responsibility to drive with due care and attention. You may need to override the system if it does not turn the high beams on or off.

WARNING: You may need to override the system when approaching other road users.

WARNING: You may need to override the system during inclement weather.

WARNING: Do not use the system in poor visibility, for example fog, heavy rain, spray or snow.

WARNING: The system may not switch the high beams off if the lights of oncoming vehicles are hidden by obstacles, for example guard rails.

WARNING: Inspect and replace the windshield wiper blades regularly to make sure the camera sensor has a clear view. The windshield wiper blades must be the correct length.

About Automatic High Beam Control

The system is designed to turn the high beams on if all of the following occur:

- You switched the system on in the information display.
- You set the lighting control to the autolamps position.
- The ambient light level is low enough that high beams are required.

Transit (TTS) Vehicles Built From: 27-01-2020 Vehicles Built Up To: 20-09-2020, CG3796en enGBR, Edition date: 201911, First-Printing

- There is no traffic in front of your vehicle.
- Your vehicle speed is greater than approximately 40 km/h (25 mph).

The system is designed to turn the high beams off if any of the following occur:

- You switch the system off in the information display.
- You set the lighting control to any position except autolamps.
- You switch the rear fog lamps on.
- The ambient light level is high enough that high beams are not required.
- The system detects an approaching vehicle's headlamps or rear lamps.
- The system detects severe rain, snow or fog.
- The system detects street lighting.
- The camera has reduced visibility.
- Your vehicle speed falls below approximately 30 km/h (19 mph).

Switching Automatic High Beam Control On or Off

To switch the system on or off, use the information display controls on the steering wheel to select the following:

Menu Item	Action
Settings	Press the menu button.
Vehicle settings	Press the ***OK*** button.
Lighting	Press the ***OK*** button.
Auto highbeam	Press the ***OK*** button.

Automatic High Beam Indicator



It illuminates to confirm when the system is ready to assist.

Overriding Automatic High Beam Control

Push the lever away from you to switch between high beam and low beam.

Automatic High Beam Control Information Messages

Message	Description
Front camera Low visibility Clean screen	The camera has reduced visibility. Clean the windshield. If the message continues to appear, have your vehicle checked as soon as possible.
Front camera temporarily not available	The camera has malfunctioned. Wait a short period of time for the camera to cool down. If the message continues to appear, have your vehicle checked as soon as possible.

Transit (TTS) Vehicles Built From: 27-01-2020 Vehicles Built Up To: 20-09-2020, CG3796en enGBR, Edition date: 201911, First-Printing

FRONT FOG LAMPS

Switching the Front Fog Lamps On or Off

Only switch the front fog lamps on during reduced visibility.

You can switch the front fog lamps on if any of the following occur:

- You set the lighting control to the parking lamps position.
- You set the lighting control to the headlamps position.
- You set the lighting control to the autolamps position and the headlamps are on.

The front fog lamp button is on the lighting control.

Press the button to switch the front fog lamps on or off.

Note: *The brightness of the daytime running lamps may decrease when the front fog lamps are switched on.*

Front Fog Lamp Indicator

It illuminates when you switch the front fog lamps on.

REAR FOG LAMPS

Switching the Rear Fog Lamps On or Off

WARNING: Do not use the rear fog lamps when it is raining or snowing and visibility is more than 50 m (164.0 ft).

You can switch the rear fog lamps on if any of the following occur:

- You switched the front fog lamps on.
- You set the lighting control to the headlamps position.
- You set the lighting control to the autolamps position and the headlamps are on.

The rear fog lamp button is on the lighting control.

Press the button to switch the rear fog lamps on or off.

Rear Fog Lamp Indicator

It illuminates when you switch the rear fog lamps on.

HEADLAMP LEVELING

To adjust the level of the headlamp beams, do the following:



E132711

1. Press to release the control.

Transit (TTS) Vehicles Built From: 27-01-2020 Vehicles Built Up To: 20-09-2020, CG3796en enGBR, Edition date: 201911, First-Printing

2. Rotate the control in accordance with your vehicle load to prevent you from distracting other road users when the headlamps are on.

Note: *Set the control to zero when your vehicle is unloaded.*

Note: *Set the headlamp beams to give between 35–100 m (115–328 ft) of road surface illumination when your vehicle is partially or fully loaded.*

3. Press to close the control.

CORNERING LAMPS

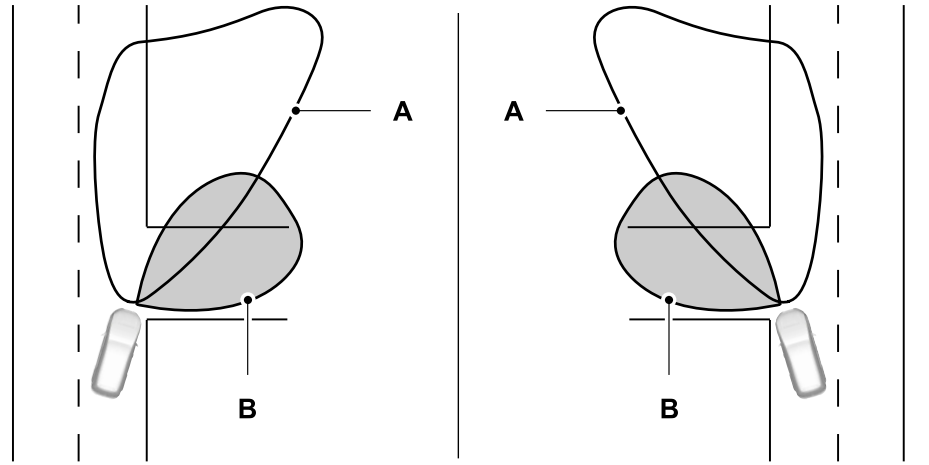

A Headlamp beam.

B Cornering lamp beam.

The cornering lamps illuminate the inside of a corner when you are turning the steering wheel.

Transit (TTS) Vehicles Built From: 27-01-2020 Vehicles Built Up To: 20-09-2020, CG3796en enGBR, Edition date: 201911, First-Printing

DIRECTION INDICATORS

Switching the Direction Indicators On and Off



E162681

Push the lever up or down to switch the direction indicators on.

Note: *Tap the lever up or down to make the direction indicators flash three times.*

Set the lever to the middle position to switch the direction indicators off.

Direction Indicator



Flashes when you switch the direction indicators on.

Note: *An increase in the rate of flashing warns of a failed indicator bulb.*

INTERIOR LAMPS - BUS

Switching All of the Interior Lamps On and Off

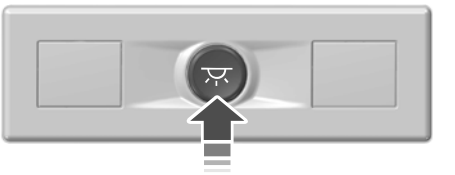

Press the button on the overhead console to switch all of the interior lamps or emergency lighting on and off.

Note: *The interior lamps turn off after approximately 30 minutes unless your vehicle speed is greater than approximately 5 km/h (3 mph) or you lock the doors from outside your vehicle.*

Switching the Front Courtesy Lamp On and Off



Fully press the button on the overhead console to switch the front courtesy lamp on.



Fully press the button on the overhead console to switch the front courtesy lamp off.

Courtesy Lamp Function

When you switch the courtesy lamp function on, the courtesy lamps turn on if:

- You open a door.
- You press the unlock button on the remote control.
- You switch the ignition off.

Transit (TTS) Vehicles Built From: 27-01-2020 Vehicles Built Up To: 20-09-2020, CG3796en enGBR, Edition date: 201911, First-Printing

Switching the Courtesy Lamp Function On



E293629

Set the switch to the middle position.

Switching the Front Map Reading Lamps On and Off



E112208

Reading Lamp Function

When you switch the reading lamp function on, the rear reading lamps can be switched on and off.

Switching the Reading Lamp Function On and Off



Press the button on the overhead console.

Note: *The indicator illuminates amber when the reading lamp function is off.*

Switching the Rear Reading Lamps On and Off



Press the button on the interior lamp.

Note: *You can only switch the rear reading lamps on and off when the reading lamp function is on.*

INTERIOR LAMPS - VAN

Switching the Courtesy Lamps On and Off



Fully press the button on the overhead console to switch the courtesy lamps on.



Fully press the button on the overhead console to switch the courtesy lamps off.

Courtesy Lamp Function

When you switch the courtesy lamp function on, the courtesy lamps turn on if:

- You open a door.
- You press the unlock button on the remote control.
- You switch the ignition off.

Switching the Courtesy Lamp Function On



E293629

Set the switch to the middle position.

Transit (TTS) Vehicles Built From: 27-01-2020 Vehicles Built Up To: 20-09-2020, CG3796en enGBR, Edition date: 201911, First-Printing

Switching the Front Map Reading Lamps On and Off



E112208

REAR FLOODLAMPS



Press the button on the rear door to switch the rear floodlamp on and off.

Note: *Rear floodlamp turns off approximately 30 minutes after you switch it on.*

Transit (TTS) Vehicles Built From: 27-01-2020 Vehicles Built Up To: 20-09-2020, CG3796en enGBR, Edition date: 201911, First-Printing

POWER WINDOWS

Opening and Closing the Windows

WARNING: Do not leave children unattended in your vehicle and do not let them play with the power windows. Failure to follow this instruction could result in personal injury.

WARNING: When closing the power windows, verify they are free of obstruction and make sure that children and pets are not in the proximity of the window openings.



Press the control to open the window. Lift the control to close the window.

Note: *The power windows operate with the ignition on, and for several minutes after you switch the ignition off or until you open a front door.*

To reduce wind noise or pulsing noise when one window is open, slightly open the opposite window.

One-Touch Open

Fully press the control and release it. Press again or lift it to stop the window.

One-Touch Close

Fully lift the control and release it. Press again or lift it to stop the window.

Resetting One-Touch Close

1. Lift and hold the switch until the window is fully closed.
2. Release the switch.
3. Lift the switch again for one more second.
4. Release the switch.
5. Lift the switch again for one more second.

Note: *Repeat the procedure if the window does not close when you use one-touch.*

Bounce-Back

The window stops and reverses if it detects an obstruction while closing.

Overriding Bounce-Back

WARNING: If you override bounce-back, the window does not reverse if it detects an obstacle. Take care when closing the windows to avoid personal injury or damage to your vehicle.

1. Close the window until it reaches the point of resistance and let it reverse.
2. Close the window a third time to the point of resistance. Bounce-back is now disabled and you can close the window manually.

Note: *The window goes past the point of resistance and you can fully close it.*

Note: *If the window does not close, have your vehicle checked as soon as possible.*

Resetting Bounce-Back

WARNING: Bounce-back is off until you reset the memory. Take care when closing the windows to avoid personal injury or damage to your vehicle.

1. Lift and hold the switch until the window is fully closed.
2. Release the switch.
3. Lift the switch again for one more second.
4. Release the switch.

Transit (TTS) Vehicles Built From: 27-01-2020 Vehicles Built Up To: 20-09-2020, CG3796en enGBR, Edition date: 201911, First-Printing

5. Lift the switch again for one more second.

Note: *Repeat the procedure if the window does not close when you use one-touch.*

Note: *If you have disconnected the battery, you must reset the bounce-back memory.*

EXTERIOR MIRRORS

Power Exterior Mirrors

WARNING: Do not adjust the mirrors when your vehicle is moving. This could result in the loss of control of your vehicle, serious personal injury or death.

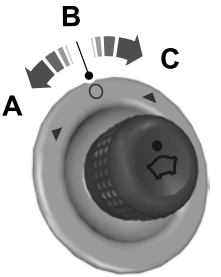

E71280

A Left-hand mirror
B Off
C Right-hand mirror

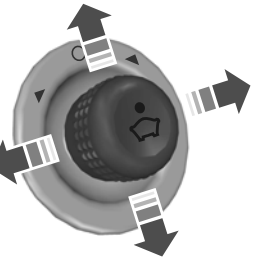

E71281

Move the controller in the direction of the arrows to adjust the mirror.

Power Folding Mirrors (If Equipped)

Folding and Unfolding

The power folding mirrors operate with the ignition on, and for several minutes after you switch the ignition off.

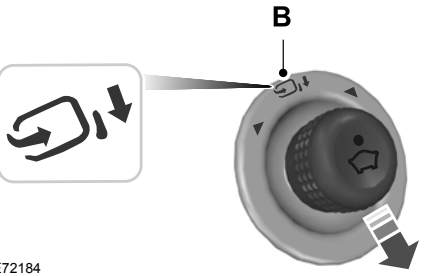

E72184

Move the controller downward to fold or unfold the mirrors.

Note: *You can only fold the mirrors when the controller is set to position B.*

Note: *If you fold and unfold the mirrors several times within one minute, the power fold function may turn off to protect the motors from overheating.*

Note: *Do not manually fold or unfold power folding mirrors.*

Transit (TTS) Vehicles Built From: 27-01-2020 Vehicles Built Up To: 20-09-2020, CG3796en enGBR, Edition date: 201911, First-Printing

Loose Mirror

If your power-folding mirrors are manually folded, they may not work properly, even after you re-position them. You need to reset them if:

- The mirrors vibrate when you drive.
- The mirrors feel loose.
- The mirrors do not stay in the folded or unfolded position.
- One of the mirrors is not in its normal driving position.

To reset the power-fold feature, use the power-folding mirror control to fold and unfold the mirrors. You may hear a loud noise as your reset the power-folding mirrors. This sound is normal. Repeat this process as needed each time the mirrors are manually folded.

Fold-Away Exterior Mirrors

Push the mirror toward the door window glass. Make sure that you fully engage the mirror in its support when you unfold it.

INTERIOR MIRROR

WARNING: Do not adjust the mirrors when your vehicle is moving. This could result in the loss of control of your vehicle, serious personal injury or death.

Pull the tab below the mirror toward you to reduce the effect of bright light from behind.

SLIDING WINDOWS

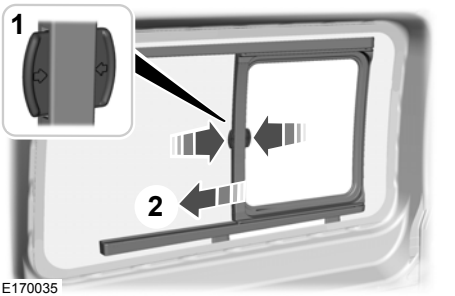

1. Press and hold the unlock button.
2. Slide the window.

REAR QUARTER WINDOWS

Opening the Rear Quarter Windows

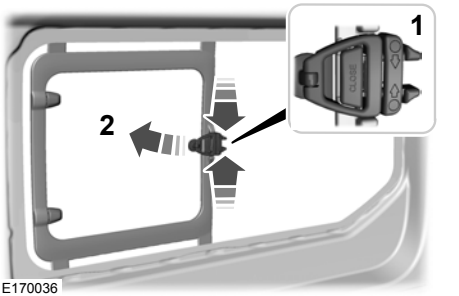

1. Press the unlock button to release the catch.

Note: *Depending on the lock type fitted, you will have to either press the unlock buttons together or down to release the catch.*

2. Hold the catch and push the window open. Make sure the catch engages.

Transit (TTS) Vehicles Built From: 27-01-2020 Vehicles Built Up To: 20-09-2020, CG3796en enGBR, Edition date: 201911, First-Printing

Note: *There is an audible click when the catch engages.*

Closing the Rear Quarter Windows

1. Hold and pull the catch to close the window.
2. Press the catch to engage the lock.

Note: *There is an audible click when the lock engages.*

Transit (TTS) Vehicles Built From: 27-01-2020 Vehicles Built Up To: 20-09-2020, CG3796en enGBR, Edition date: 201911, First-Printing

GAUGES

Instrument Cluster

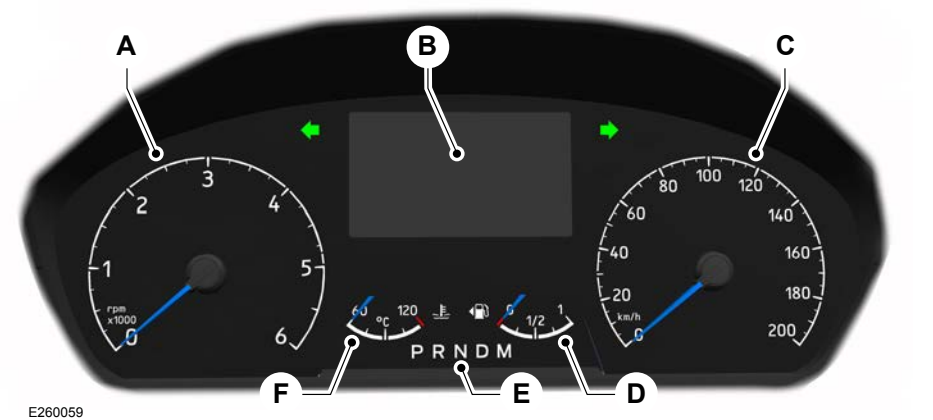

A Tachometer.
B Information display.
C Speedometer.
D Fuel gauge.
E Automatic transmission position indicators.
F Engine coolant temperature gauge.

Tachometer

Shows the engine speed.

Information Display

Shows the following information:

- Odometer.
- Trip computer.
- MyView information.
- Driver assistance information.
- Navigation information.
- Audio information.
- Phone information.
- Vehicle and system settings.
- Outside air temperature.
- Shift indicators.

Odometer

Records the total distance traveled by your vehicle.

Transit (TTS) Vehicles Built From: 27-01-2020 Vehicles Built Up To: 20-09-2020, CG3796en enGBR, Edition date: 201911, First-Printing

The system detects unauthorized odometer adjustments to avoid total distance reading fraud. If the system detects an unauthorized odometer adjustment, the total distance reading displays XXXX. Recovery of the original mileage could result in system damage not covered by the vehicle Warranty and may carry a significant expense.

Speedometer

Shows the vehicle speed.

Fuel Gauge

The fuel gauge indicates approximately how much fuel is in the fuel tank.

The arrow adjacent to the fuel pump symbol indicates on which side of your vehicle the fuel filler door is located.



E236403

A The fuel filler door is on the left-hand side of your vehicle.

B The fuel filler door is on the right-hand side of your vehicle.

Low Fuel Level Warning Lamp



If it illuminates when you are driving, refuel as soon as possible.

Automatic Transmission Position Indicators

The instrument cluster displays the current position. See **Automatic Transmission** (page 149).

Engine Coolant Temperature Gauge

At normal operating temperature, the needle remains in the center section. If the needle enters the red section, the engine is overheating. Stop your vehicle as soon as it is safe to do so, switch the engine off and allow it to cool.

Note: *The system reduces the engine speed if you continue to operate the engine at a high engine speed.*

Note: *Do not restart the engine until the cause of overheating has been determined and resolved.*

Engine Coolant Temperature Warning Lamp



If it illuminates when your vehicle is moving, this indicates that the engine is overheating. Stop your vehicle as soon as it is safe to do so and switch the engine off. Have your vehicle checked as soon as possible.

WARNING LAMPS AND INDICATORS



Adaptive cruise control indicator. It illuminates when you switch the system on. It illuminates white when the system is in standby mode. It illuminates green when you set the adaptive cruise speed.

Transit (TTS) Vehicles Built From: 27-01-2020 Vehicles Built Up To: 20-09-2020, CG3796en enGBR, Edition date: 201911, First-Printing



Airbag warning lamp. If it does not illuminate when you switch the ignition on, continues to flash or remains on when the engine is running, this indicates a malfunction. Have your vehicle checked as soon as possible.



Anti-lock brake system warning lamp. If it illuminates when you are driving, this indicates a malfunction. Your vehicle continues to have normal braking without the anti-lock brake system function. Have your vehicle checked as soon as possible.



Auto-Start-Stop indicators. It illuminates green when the engine stops. It flashes amber and a message appears when you need to take action. It illuminates gray with a strikethrough when the system is not available.



Automatic high beam control on indicator. It illuminates to confirm when the system is ready to assist.



Blind spot information system indicator. When the system detects a vehicle, the indicator illuminates in the exterior mirror on the side the approaching vehicle is coming from. If you turn the direction indicator on for that side of your vehicle, the indicator flashes.



Blind spot information system and cross traffic alert warning lamp. If the system malfunctions, the warning lamp illuminates in the instrument cluster and a message appears in the information display. Have your vehicle checked as soon as possible.



Brake pad wear warning lamp. It illuminates when the brake pads have worn down to a predetermined limit. Have your vehicle checked as soon as possible.



Change engine oil indicator. It displays when the engine oil life is becoming depleted. Have the engine oil changed as soon as possible.

Note: *Do not ignore engine oil change indicators and information messages. Resulting component damage is not covered by the Warranty.*

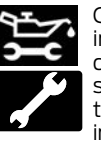

Change engine oil now indicators. If both indicators display, the engine oil life is seriously depleted. Engine torque reduces to 70% to further indicate the serious risk of engine damage. Have the engine oil changed immediately.

Note: *Do not ignore engine oil change indicators and information messages. Resulting component damage is not covered by the Warranty.*



Cross traffic alert indicator. When the system detects an approaching vehicle a tone sounds, the indicator illuminates in the relevant exterior mirror and arrows appear in the information display to show which side the approaching vehicle is coming from.



Cruise control indicator. It illuminates when you switch the system on.

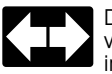

Direction indicator. It flashes when you switch the direction indicators on.



Door ajar warning lamp. It illuminates when you switch the ignition on and remains on if any door or the hood is open.

Transit (TTS) Vehicles Built From: 27-01-2020 Vehicles Built Up To: 20-09-2020, CG3796en enGBR, Edition date: 201911, First-Printing


Eco mode indicator. It illuminates when the drive mode is selected.


Efficient drive mode indicator. It indicates that you have to slowly decelerate.


Engine coolant temperature warning lamp. If it illuminates when your vehicle is moving, this indicates that the engine is overheating. Stop your vehicle as soon as it is safe to do so and switch the engine off. Have your vehicle checked as soon as possible.


Engine oil pressure warning lamp. It illuminates when you switch the ignition on. If it illuminates when the engine is running this indicates a malfunction. Stop your vehicle as soon as it is safe to do so and switch the engine off. Check the engine oil level. If the oil level is sufficient, this indicates a system malfunction. Have your vehicle checked as soon as possible.



Engine warning lamps. If both lamps illuminate when the engine is running, stop your vehicle as soon as it is safe to do so. Continuing to drive your vehicle may cause reduced power or the engine to stop. Switch the ignition off and attempt to restart the engine. Have your vehicle checked as soon as possible.


Fasten seatbelt warning lamp. It illuminates until you fasten your seatbelt.


Front fog lamp indicator. It illuminates when you switch the front fog lamps on.


Fuel filter service warning lamp. If it illuminates when the engine is running this indicates there is excess water in the fuel filter. You should drain water from the fuel filter water trap whenever the warning lamp illuminates or a message appears in the information display.


Glow plug indicator. If it illuminates, wait until it turns off before starting.

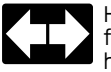
Hazard flasher indicator. It flashes when you switch the hazard flashers on.


High beam headlamp indicator. It illuminates when you switch the high beam headlamps on.


Ignition warning lamp. It illuminates when you switch the ignition on. If it illuminates when the engine is running this indicates a malfunction. Have your vehicle checked as soon as possible.


Lamps on indicator. It illuminates when you switch the low beam headlamps or the side and rear lamps on.


Lane keeping aid indicator. It illuminates in the information display when you switch the system on and Aid Mode or Alert and Aid Mode are selected.


Lane keeping alert indicator. It illuminates in the information display when you switch the system on and Alert Mode is selected.


Lane keeping system warning lamp. It could illuminate when you switch the system off. If it illuminates when you are driving, this indicates a malfunction. Have your vehicle checked as soon as possible.

Transit (TTS) Vehicles Built From: 27-01-2020 Vehicles Built Up To: 20-09-2020, CG3796en enGBR, Edition date: 201911, First-Printing


Low fuel level warning lamp. If it illuminates when you are driving, refuel as soon as possible.


Malfunction indicator lamp. If it illuminates when the engine is running this indicates a malfunction. If it flashes, engine misfire may be occurring. Increased exhaust gas temperatures could damage the diesel particulate filter or other vehicle components. Avoid heavy acceleration and deceleration and have your vehicle checked as soon as possible.


Mud/Ruts mode indicator. It illuminates when the drive mode is selected.


Parking brake warning lamp. It illuminates when you engage the parking brake and the ignition is on. If it illuminates when your vehicle is moving, make sure the parking brake is disengaged. If the parking brake is disengaged, this indicates low brake fluid level or a brake system fault. Have your vehicle checked as soon as possible.


Powertrain warning lamp. If it illuminates when the engine is running this indicates a malfunction. If it flashes when you are driving, immediately reduce the vehicle speed. Avoid heavy acceleration and deceleration and have your vehicle checked as soon as possible.


Pre-collision assist warning lamp. It illuminates if your vehicle rapidly approaches another vehicle, to warn you of the risk of a crash with the vehicle in front of you. It could illuminate red if the distance to the vehicle ahead is small. It illuminates amber when you switch the system off or if the system is not available.


Rear fog lamp indicator. It illuminates when you switch the rear fog lamps on.


Selective catalytic reductant system warning lamp. The warning lamp illuminates if the system detects the fluid level is low or if there is a system malfunction. If the warning lamp illuminates, the information display messages give you an indication whether the concern is fluid related or if there is a selective catalytic reductant system malfunction. If the warning lamp illuminates when your vehicle is moving, and the fluid is at a sufficient level, this indicates a system malfunction. Have your vehicle checked as soon as possible.


Shift indicator. It illuminates to advise you that shifting to a higher or lower gear may give better performance, fuel economy or lower emissions.


Slippery mode indicator. It illuminates when the drive mode is selected.


Stability control and traction control indicator. It flashes during operation. If it does not illuminate when you switch the ignition on, or remains on when the engine is running, this indicates a malfunction. Have your vehicle checked as soon as possible.



Stability control and traction control off warning lamp. It illuminates when you switch the system off.

Transit (TTS) Vehicles Built From: 27-01-2020 Vehicles Built Up To: 20-09-2020, CG3796en enGBR, Edition date: 201911, First-Printing



Tire pressure monitoring system warning lamp. It illuminates if the tire pressure in one or more tires is below the correct tire pressure. If it does not illuminate when you switch the ignition on, or flashes when the engine is running, this indicates a malfunction. Have your vehicle checked as soon as possible.



Tow/haul mode indicator. It illuminates when the drive mode is selected.

Transit (TTS) Vehicles Built From: 27-01-2020 Vehicles Built Up To: 20-09-2020, CG3796en enGBR, Edition date: 201911, First-Printing

GENERAL INFORMATION

WARNING: Driving while distracted can result in loss of vehicle control, crash and injury. We strongly recommend that you use extreme caution when using any device that may take your focus off the road. Your primary responsibility is the safe operation of your vehicle. We recommend against the use of any hand-held device while driving and encourage the use of voice-operated systems when possible. Make sure you are aware of all applicable local laws that may affect the use of electronic devices while driving.

Note: *For your safety, some features are speed-dependent. Their use is limited to when your vehicle speed is not moving.*

Information Display Controls



E257718

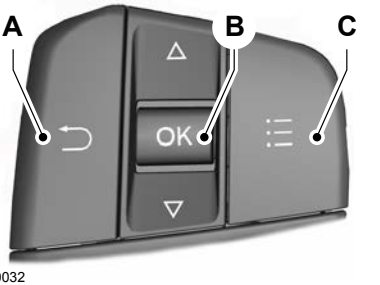

E250032

A Return button.
B OK button.
C Menu button.

Return Button

Use the return button to go back or to exit.

OK Button

Use the ***OK*** button to make a selection. You can also use it to scroll through a menu.

Menu Button

Use the menu button on the main screen to display the submenu. You can also use it to go back to the main screen.

Information Display Menus

Main Menu

Menu Item
Trip computer 1 or ***Trip computer 2***
MyView
Driver assist.
Navigation

Transit (TTS) Vehicles Built From: 27-01-2020 Vehicles Built Up To: 20-09-2020, CG3796en enGBR, Edition date: 201911, First-Printing

Menu Item
Audio
Phone
Settings

Submenus

Trip computer 1 and Trip computer 2

Menu Item
Trip computer 1
Trip computer 2
Reset individual values
Configure view

MyView

Menu Item
Digital speedometer
Fuel economy
Trip computer/audio
Eco coach
Calm screen

Driver assist.

Menu Item
Traction control
BLIS
Trailer BLIS
Pre-collision Assist
Traffic sign recognition
Lane keeping system

Menu Item
Driver alert
Hill Start Assist
Cross traffic alert
Eco coach
Trailer control
Cruise control
Speed limiter
Rear Park Pilot

Navigation

Menu Item
Home
Favourite destinations
Previous destinations

Audio

Menu Item
Radio
USB device.
Bluetooth device.

Phone

Menu Item
All calls
Incoming calls
Missed calls
Outgoing calls

Transit (TTS) Vehicles Built From: 27-01-2020 Vehicles Built Up To: 20-09-2020, CG3796en enGBR, Edition date: 201911, First-Printing

Settings

Menu Item
Information
Display
Driver assistance
Vehicle settings
Vehicle maintenance
MyKey

TRIP COMPUTER

You can reset the trip computer and personalize it using the information display. See **Information Displays** (page 89).

Resetting the Trip Computer

Navigate to the following main menu item.

Menu Item	Action
Trip computer 1	Press and hold the ***OK*** button until the system reset confirmation appears.
Trip computer 2	Press and hold the ***OK*** button until the system reset confirmation appears.

Alternatively you can reset individual trip values.

Menu Item	Action
Trip computer 1	Press the menu button.
Trip computer 2	Press the menu button.
Reset individual values	Press the ***OK*** button.
Reset trip odometer	Press and hold the ***OK*** button until the system reset confirmation appears.
Reset trip timer	Press and hold the ***OK*** button until the system reset confirmation appears.
Reset average fuel	Press and hold the ***OK*** button until the system reset confirmation appears.
Reset average speed	Press and hold the ***OK*** button until the system reset confirmation appears.

Transit (TTS) Vehicles Built From: 27-01-2020 Vehicles Built Up To: 20-09-2020, CG3796en enGBR, Edition date: 201911, First-Printing

Personalization

Navigate to the following main menu item.

Menu Item	Action
Trip computer 1	Press the menu button.
Trip computer 2	Press the menu button.
Configure view	Press the ***OK*** button.
Trip odometer	Press the ***OK*** button.
Trip timer	Press the ***OK*** button.
Average fuel consumption	Press the ***OK*** button.
Average speed	Press the ***OK*** button.
Distance to empty	Press the ***OK*** button.
Instantaneous fuel	Press the ***OK*** button.

Note: *You can display a maximum of four values.*

Trip Odometer

Registers the total distance since you last reset the value.

Trip Timer

Registers the total time since you last reset the value.

Average Fuel

Indicates the average fuel consumption since you last reset the value.

Average Speed

Indicates the average vehicle speed since you last reset the value.

Distance to Empty

Indicates the approximate distance your vehicle could travel on the fuel remaining in the fuel tank. Changes in driving pattern may cause the value to vary.

Instantaneous Fuel

Indicates the current fuel consumption.

Transit (TTS) Vehicles Built From: 27-01-2020 Vehicles Built Up To: 20-09-2020, CG3796en enGBR, Edition date: 201911, First-Printing

PERSONALIZED SETTINGS

Language

Menu Item	Action
Settings	Press the menu button.
Display	Press the ***OK*** button.
Language	Press the ***OK*** button. Choose your applicable setting.

Measure Unit

Menu Item	Action
Settings	Press the menu button.
Display	Press the ***OK*** button.
Measurement unit	Press the ***OK*** button. Choose your applicable setting.

Temperature Unit

Menu Item	Action
Settings	Press the menu button.
Display	Press the ***OK*** button.
Temperature unit	Press the ***OK*** button. Choose your applicable setting.

Tire Pressure Unit (If Equipped)

Menu Item	Action
Settings	Press the menu button.
Display	Press the ***OK*** button.
Tyre pressure	Press the ***OK*** button. Choose your applicable setting.

Transit (TTS) Vehicles Built From: 27-01-2020 Vehicles Built Up To: 20-09-2020, CG3796en enGBR, Edition date: 201911, First-Printing

Chimes

Menu Item	Action
Settings	Press the menu button.
Vehicle settings	Press the ***OK*** button.
Chimes	Press the ***OK*** button.
Parking space found	Press the ***OK*** button.
Information	Press the ***OK*** button.

Transit (TTS) Vehicles Built From: 27-01-2020 Vehicles Built Up To: 20-09-2020, CG3796en enGBR, Edition date: 201911, First-Printing

MANUAL CLIMATE CONTROL

Switching the Climate Control On and Off



Switching the Recirculated Air On and Off



Note: *The air currently in the passenger compartment recirculates.*

Switching the Air Conditioning On and Off



Note: *Under certain conditions, the air conditioning compressor could continue to operate after you switch air conditioning off.*

Switching Maximum Defrost On and Off



Turn the temperature control clockwise past the highest setting to maximize defrosting.

Note: *The temperature control springs back to the highest setting.*

Note: *When you switch maximum defrost on, the heated windshield, heated rear window and air conditioning turn on. The blower motor is set to the highest speed.*

Note: *When you switch maximum defrost off, the heated windshield and heated rear window remain on.*

Switching Maximum Cooling On and Off



Turn the temperature control counterclockwise past the lowest setting to maximize cooling.

Note: *The temperature control springs back to the lowest setting.*

Note: *When you switch maximum cooling off, air conditioning remains on.*

Setting the Blower Motor Speed



Note: *Lights on the control illuminate to indicate the blower motor speed.*

Note: *When you switch the blower motor off, air conditioning turns off and the windows could fog up.*

Directing Air to the Windshield Air Vents



Directing Air to the Instrument Panel Air Vents



Directing Air to the Footwell Air Vents



Transit (TTS) Vehicles Built From: 27-01-2020 Vehicles Built Up To: 20-09-2020, CG3796en enGBR, Edition date: 201911, First-Printing

Setting the Temperature

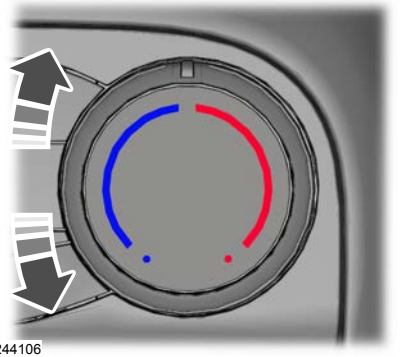
E244106

Turn the temperature control counterclockwise for cooler temperature settings.

Turn the temperature control clockwise for warmer temperature settings.

HINTS ON CONTROLLING THE INTERIOR CLIMATE

General Hints

Do not place objects under the front seats as this may interfere with directing air to the rear seats.

Remove any snow, ice or leaves from the air intake area at the base of the windshield.

Note: *You may feel a small amount of air from the footwell air vents regardless of the air distribution setting.*

Note: *To reduce humidity build-up inside your vehicle, do not drive with the system switched off or with recirculated air always switched on.*

Note: *To reduce fogging of the windshield during humid weather conditions, direct air to the windshield air vents.*

Note: *Prolonged use of recirculated air may cause the windows to fog up.*

Note: *Use air conditioning with recirculated air to improve cooling performance and efficiency.*

Quickly Heating the Interior

- Select the highest blower motor speed.
- Select the highest temperature.
- Direct air to the footwell air vents.

Recommended Settings for Heating

- Select a medium blower motor speed.
- Select the required temperature.
- Direct air to the footwell and windshield air vents.

Quickly Cooling the Interior

- Select maximum cooling.

Note: *To improve the time to reach a comfortable temperature in hot weather, drive with the windows open until you feel cold air through the air vents.*

Recommended Settings for Cooling

- Select a medium blower motor speed.
- Select the required temperature.
- Direct air to the instrument panel air vents.
- Press A/C.

Defogging the Side Windows in Cold Weather

- Select maximum defrost.

Transit (TTS) Vehicles Built From: 27-01-2020 Vehicles Built Up To: 20-09-2020, CG3796en enGBR, Edition date: 201911, First-Printing

Defogging or Clearing the Windshield of Thin Ice

- Select maximum defrost.

REAR PASSENGER CLIMATE CONTROLS

Adjusting the Blower Motor Speed



Directing Air to the Overhead Air Vents



When you direct air to the overhead air vents, the system distributes cold air.

Directing Air to the Footwell Air Vents



When you direct air to the footwell air vents, the system distributes hot air.

Directing Air to the Overhead Air Vents and the Footwell Air Vents



When you direct air to the Overhead and footwell air vents, the system distributes warm air.

HEATED WINDSHIELD



Press the button to clear the windshield of thin ice and fog. The heated windshield turns off after a short period of time.

Note: *Make sure that the engine is running before switching the heated windshield on.*

Note: *The system does not operate if the battery charge level is low.*

HEATED REAR WINDOW



Press the button to clear the rear window of thin ice and fog. The heated rear window turns off after a short period of time.

Note: *Make sure the engine is on before operating the heated windows.*

Note: *Do not use razor blades or other sharp objects to clean or remove decals from the inside of the heated rear window. The vehicle Warranty may not cover damage caused to the heated rear window grid lines.*

HEATED EXTERIOR MIRRORS - VEHICLES WITHOUT: HEATED REAR WINDOW



Press the button to clear the exterior mirrors of thin ice and fog. Press the button again to switch them off. They switch off after a short period of time.

Note: *Do not remove ice from the mirrors with a scraper or adjust the mirror glass when it is frozen in place. These actions could cause damage to the glass and mirrors.*

Note: *Do not clean the mirror housing or glass with harsh abrasives, fuel or other petroleum-based cleaning products.*

HEATED EXTERIOR MIRRORS - VEHICLES WITH: HEATED REAR WINDOW

When you switch the heated rear window on, the heated exterior mirrors turn on.

Note: *Do not remove ice from the mirrors with a scraper or adjust the mirror glass when it is frozen in place.*

Transit (TTS) Vehicles Built From: 27-01-2020 Vehicles Built Up To: 20-09-2020, CG3796en enGBR, Edition date: 201911, First-Printing

Note: *Do not clean the mirror housing or glass with harsh abrasives, fuel or other petroleum-based cleaning products. The vehicle warranty may not cover damage caused to the mirror housing or glass.*

AUXILIARY HEATER

Principle of Operation

The system is designed to reduce the time needed to heat the engine when it is running. It turns on or off depending on the outside air temperature and the coolant temperature.

The system warms the engine and the vehicle interior. It uses fuel from the vehicle fuel tank.

Using the Auxiliary Heater

WARNING: We recommend that you have a qualified technician check and repair the heater system after a crash. Failure to follow this instruction could result in personal injury or death.

WARNING: Do not use the fuel-operated parking heater at fuel filling stations or near sources of combustible vapors, dust or in enclosed spaces. This could result in serious personal injury or death.

Note: *The system does not operate if the battery charge level is low.*

Note: *Make sure the heater exhaust outlet, behind the left-hand front tire, is free from snow, ice, mud and any other blockages to avoid issues with the heater operation.*

Note: *When the system is on, exhaust fumes come from under your vehicle. This is normal.*

Note: *If the heater is in the process of stopping, excess fuel in the heater burns out and there is some heat, exhaust and noise.*

Switching the Auxiliary Heater On and Off

To switch the auxiliary heater on or off, use the information display controls on the steering wheel to select the following:

Menu Item	Action
Settings	Press the menu button.
Vehicle settings	Press the ***OK*** button.
Aux heater	Press the ***OK*** button.

Parking Heater

Principle of Operation

The system is designed to provide heat when your vehicle is parked.

The system warms the engine and the vehicle interior. It uses fuel from the vehicle fuel tank.

Transit (TTS) Vehicles Built From: 27-01-2020 Vehicles Built Up To: 20-09-2020, CG3796en enGBR, Edition date: 201911, First-Printing

Note: *Make sure the heater exhaust outlet, behind the left-hand front tire, is free from snow, ice, mud and any other blockages to avoid issues with the heater operation.*

Using the Parking Heater

WARNING: We recommend that you have a qualified technician check and repair the heater system after a crash. Failure to follow this instruction could result in personal injury or death.

WARNING: Do not use the fuel-operated parking heater at fuel filling stations or near sources of combustible vapors, dust or in enclosed spaces. This could result in serious personal injury or death.

The system does not operate if the battery charge level is low.

The system only operates when your vehicle is stationary with the engine off.

When you correctly use the system it:

- Keeps the windows clear of thin ice and helps prevent condensation.
- Assists the engine to reach normal operating temperature sooner.

Note: *If the heater is in the process of stopping, excess fuel in the heater burns out and there is some heat, exhaust and noise.*

Parking Heater Information Messages

Message	Action
Park heater not started Low fuel level	Displays if the parking heater fails to operate due to low fuel level. Refuel as soon as possible.

Switching Continue Heat On

When you switch the ignition off, the heater starts or continues running if conditions permit for up to 30 minutes.

Note: *You can use this mode to maintain a warm cabin after you switch the ignition off. After the heater completes this mode, the check box in the information display resets to unchecked.*

To switch continue heat on, use the information display controls on the steering wheel to select the following:

Menu Item	Action
Settings	Press the menu button.
Vehicle settings	Press the ***OK*** button.
Park heater	Press the ***OK*** button.
Continue heat	Press the ***OK*** button.

Transit (TTS) Vehicles Built From: 27-01-2020 Vehicles Built Up To: 20-09-2020, CG3796en enGBR, Edition date: 201911, First-Printing

Setting the Timer

The system has three different modes, that you can set in the information display.

Timer Mode	Description
Once	Allows you to set one heating cycle for a specific day. If conditions permit, the heater starts up to 40 minutes prior to the set date and time.[1]
Time one	Allows you to program a heating cycle for each day of the week. The time remains stored and the system warms up your vehicle prior to the programmed departure times.
Time two	Allows you to program a second heating cycle for each day of the week. The time remains stored and the system warms up your vehicle prior to the programmed departure times.

[1] You must set the day and time for this mode before you check the box in the information display.

Note: *The time and date on your vehicle clock must be correctly set.*

To set a timer mode, use the information display controls on the steering wheel to select the following:

Menu Item	Action
Settings	Press the menu button.
Vehicle settings	Press the ***OK*** button.
Park heater	Press the ***OK*** button.
Heater programming	Press the ***OK*** button.
Activate	Press the ***OK*** button.
Once	Press the ***OK*** button.
Activate	Press the ***OK*** button.
Time one	Press the ***OK*** button.
Activate	Press the ***OK*** button.
Time two	Press the ***OK*** button.
Activate	Press the ***OK*** button.

Transit (TTS) Vehicles Built From: 27-01-2020 Vehicles Built Up To: 20-09-2020, CG3796en enGBR, Edition date: 201911, First-Printing

Switching the Parking Heater On and Off With the Remote Control

The parking heater transmitter allows you to remotely request the heater to start and run for up to 30 minutes or to stop all heater modes.

Note: *Up to three transmitters can be paired to your vehicle.*

Note: *The LED light on the remote transmitter does not indicate the actual status of the heater. The light does not guarantee the heater received a signal to start or stop.*

Note: *Electronic devices that operate in the same frequency may affect the range of the transmitter.*

Press and hold the **ON** or **HEAT** button on the transmitter until a green LED light illuminates on the transmitter.

Press and hold the **OFF** button on the transmitter until a red LED light illuminates on the transmitter. This applies only for the heater mode running at the present time, so future timer settings or future continue heat settings do not disable.

The following table lists the parking heater remote control indications.

Transmitter LED	Description
Green	The transmitter sent a radio signal.
Flashing green	The transmitter sent a radio signal, but the heater did not receive the signal.
Red	The transmitter sent a radio signal.
Flashing red	The transmitter sent a radio signal, but the heater did not receive the signal.

REMOTE START

About Remote Start

The system allows you to remotely start the engine using the FordPass app.

The system can also adjust the interior temperature according to the settings that you chose.

Note: *All other vehicle systems remain off when you have remotely started the engine.*

Note: *The vehicle remains secured when you have remotely started the engine. A valid key must be inside your vehicle to switch the ignition on and drive your vehicle.*

Remote Start Limitations

Remote start does not work if:

- The alarm horn is sounding.
- The hood is open.
- The transmission is not in park (P).

Enabling Remote Start

1. Using the information display controls on the steering wheel, select ***Settings***.
2. Select ***Vehicle settings***.
3. Select ***Remote start***.
4. Switch ***System*** on or off.

Note: *To use remote start, make sure that the modem is enabled. See* ***Connected Vehicle*** *(page 315).*

Transit (TTS) Vehicles Built From: 27-01-2020 Vehicles Built Up To: 20-09-2020, CG3796en enGBR, Edition date: 201911, First-Printing

Remotely Starting the Engine

WARNING: To avoid exhaust fumes, do not use remote start if your vehicle is parked indoors or in areas that are not well ventilated.

Use the FordPass app to start the engine.

Note: *The direction indicators flash twice.*

Note: *The parking lamps turn on when the engine is running.*

Note: *The horn sounds if the system fails to start.*

Note: *You must switch on the ignition before driving your vehicle.*

Remotely Stopping the Engine

Use the FordPass app to stop the engine.

Remote Start Settings

Use the information display to adjust the remote start settings.

Note: *You cannot adjust the climate control settings when you have remotely started the engine.*

Note: *When you switch the ignition on, the climate control system returns to the last used settings.*

Switching *Auto* On

1. Using the information display controls on the steering wheel, select ***Settings***.
2. Select ***Vehicle settings***.
3. Select ***Remote start***.
4. Select ***Climate control***.
5. Switch ***Auto*** on.

Note: *If you switch **Auto** on, the system attempts to heat or cool the interior to 22ºC (72ºF).*

Note: *The heated windshield, heated rear window and heated seats could turn on in cold weather.*

Switching *Last settings* On

1. Using the information display controls on the steering wheel, select ***Settings***.
2. Select ***Vehicle settings***.
3. Select ***Remote start***.
4. Select ***Climate control***.
5. Switch ***Last settings*** on.

Note: *If you switch **Last settings** on, the system remembers the last used settings.*

Switching the Heated Seats Settings On

1. Using the information display controls on the steering wheel, select ***Settings***.
2. Select ***Vehicle settings***.
3. Select ***Remote start***.
4. Select ***Seats***.
5. Switch ***Auto*** on.

Note: *If you switch the heated seats settings on, the heated seats turn on during cold weather.*

Setting the *Duration*

You can set a duration for the engine to run.

Note: *Wait a few seconds before remotely starting the engine after the engine stops running.*

1. Using the information display controls on the steering wheel, select ***Settings***.
2. Select ***Vehicle settings***.
3. Select ***Remote start***.
4. Select ***Duration***.

Transit (TTS) Vehicles Built From: 27-01-2020 Vehicles Built Up To: 20-09-2020, CG3796en enGBR, Edition date: 201911, First-Printing

SITTING IN THE CORRECT POSITION

WARNING: Do not recline the seatback too far as this can cause the occupant to slide under the seatbelt, resulting in serious injury in the event of a collision.

WARNING: Always sit upright against your seatback with your feet on the floor.

WARNING: Do not place objects higher than the top of the seat backrest. Failure to follow this instruction could result in personal injury or death in the event of a sudden stop or crash.

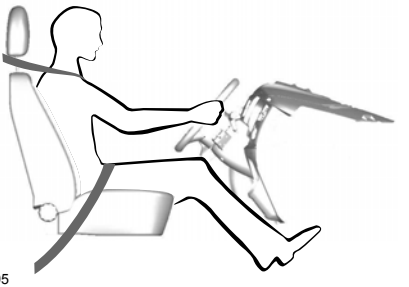

E68595

When you use them properly, the seat, head restraint, seatbelt and airbags will provide optimum protection in the event of a crash.

We recommend that you follow these guidelines:

- Sit in an upright position with the base of your spine as far back as possible.
- Do not recline the seat backrest so that your torso is more than 30º from the upright position.
- Adjust the head restraint so that the top of it is level with the top of your head and as far forward as possible. Make sure that you remain comfortable.
- Keep sufficient distance between yourself and the steering wheel. We recommend a minimum of 25 cm (10 in) between your breastbone and the airbag cover.
- Hold the steering wheel with your arms slightly bent.
- Bend your legs slightly so that you can press the pedals fully.
- Position the shoulder strap of the seatbelt over the center of your shoulder and position the lap strap tightly across your hips.

Make sure that your driving position is comfortable and that you can maintain full control of your vehicle.

HEAD RESTRAINTS

WARNING: Fully adjust the head restraint before you sit in or operate your vehicle. This will help minimize the risk of neck injury in the event of a collision. Do not adjust the head restraint when your vehicle is moving.

Transit (TTS) Vehicles Built From: 27-01-2020 Vehicles Built Up To: 20-09-2020, CG3796en enGBR, Edition date: 201911, First-Printing

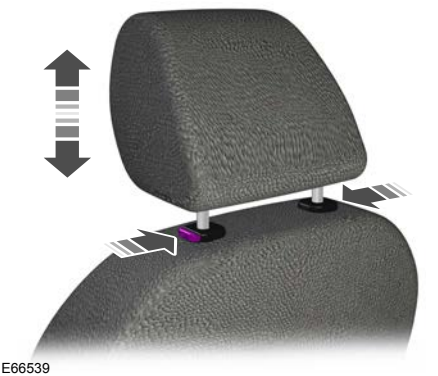

E66539

Adjusting the Head Restraint

WARNING: Raise the rear head restraint when the rear seat is occupied by a passenger or a child restraint.

Adjust the head restraint so that the top of it is level with the top of your head.

Removing the Head Restraint

Press the locking buttons and remove the head restraint.

MANUAL SEATS

WARNING: Do not adjust the driver seat when your vehicle is moving.

WARNING: Make sure the driver seat fully locks into place by rocking it backward and forward.

Moving the Seat Backward and Forward



E130249

Note: *The driver seat has removable stop bolts on the track to enable access to the vehicle battery. See* ***Changing the 12V Battery*** *(page 257).*

Adjusting the Lumbar Support

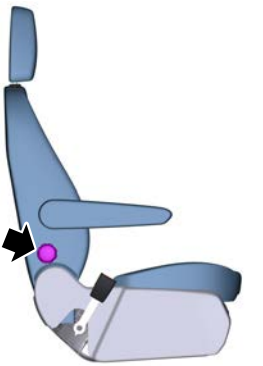

E146386

Transit (TTS) Vehicles Built From: 27-01-2020 Vehicles Built Up To: 20-09-2020, CG3796en enGBR, Edition date: 201911, First-Printing

Adjusting the Height of the Driver Seat

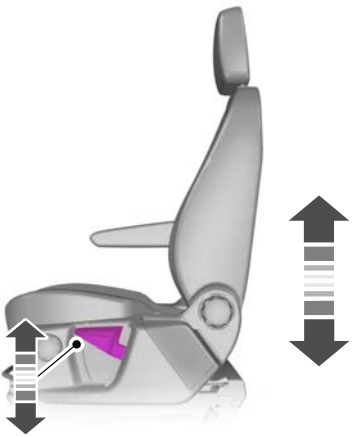

E146384

Seat Cushion Adjustment

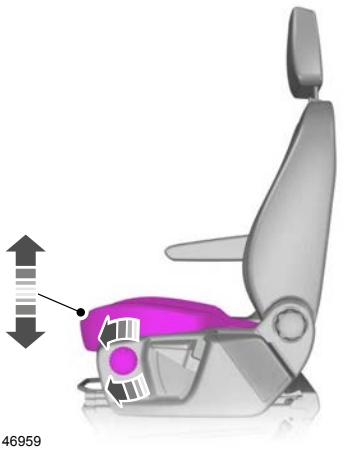

E146959

Recline Adjustment

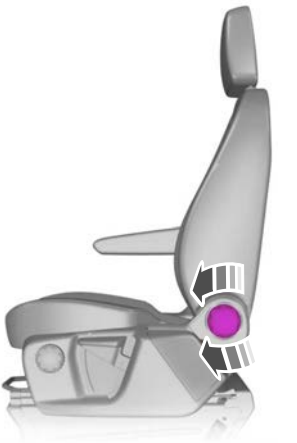

E146385

Adjusting the Armrest

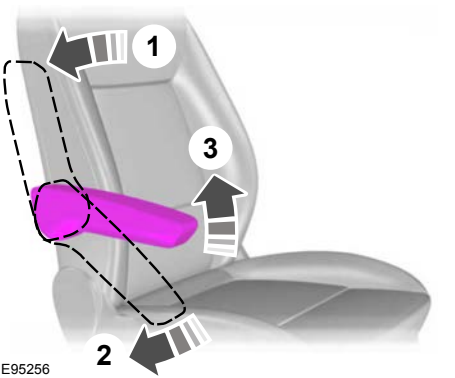

E95256

Swivel Seat

WARNING: Make sure the seat locks into place and is facing forward when your vehicle is moving.

Transit (TTS) Vehicles Built From: 27-01-2020 Vehicles Built Up To: 20-09-2020, CG3796en enGBR, Edition date: 201911, First-Printing

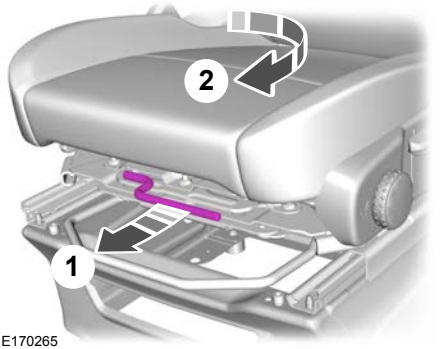

E170265

The seat can swivel through 180 degrees in an inboard direction. You may need to adjust the seat to allow sufficient clearance for it to swivel in a single motion.

Note: *We recommend the seat is unoccupied.*

POWER SEATS

WARNING: Do not adjust the driver seat when your vehicle is moving.

WARNING: Do not place cargo or any objects behind the seat backrest before returning it to the original position.

WARNING: The driver seat has removable stop bolts on the track to enable access to the vehicle battery. See **Changing the 12V Battery** (page 257).

Transit (TTS) Vehicles Built From: 27-01-2020 Vehicles Built Up To: 20-09-2020, CG3796en enGBR, Edition date: 201911, First-Printing

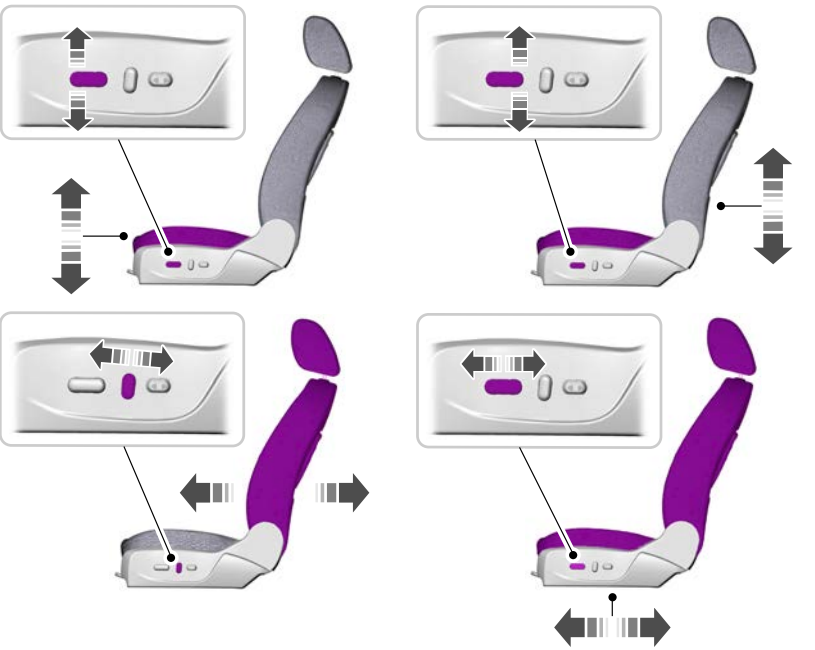

E138647

Power Lumbar



E138648

REAR SEATS

WARNING: Do not use the bench seats as a bed when your vehicle is moving.

Note: *Rear seat arrangements vary depending on the vehicle.*

Recline Adjustment

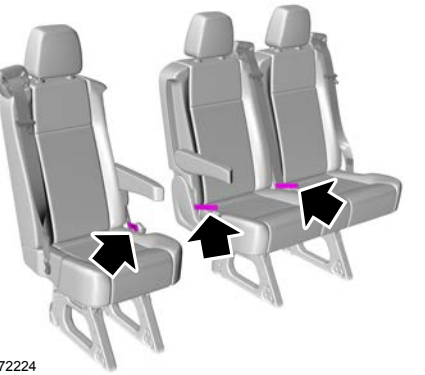

E172224

With the seat occupied, pull the lever or strap, or press the button to recline or raise the seatback.

Removing the Seats - M2 Bus

WARNING: Seats can weigh up to 60 kg (132 lb). Do not attempt to lift or carry a seat on your own.

Transit (TTS) Vehicles Built From: 27-01-2020 Vehicles Built Up To: 20-09-2020, CG3796en enGBR, Edition date: 201911, First-Printing

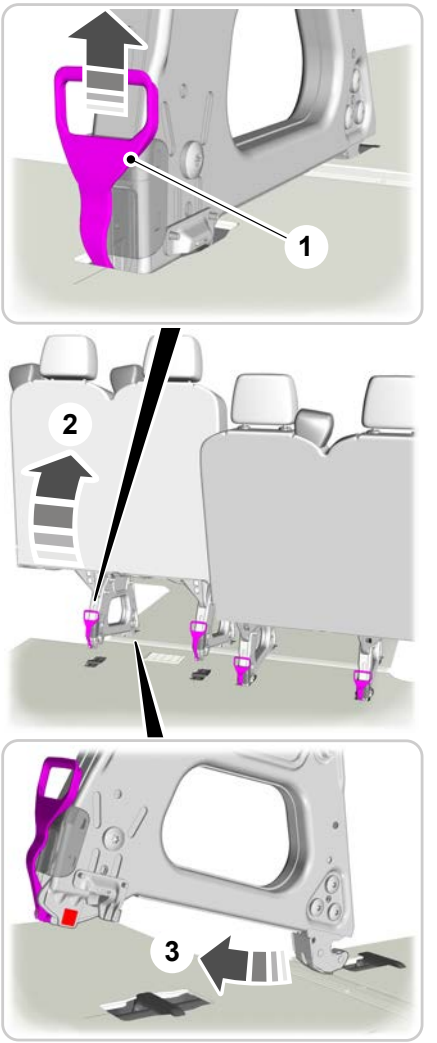

E173870

1. Pull the release handles up.
2. Tilt the seat forward to release the seat frame rear catches.
3. Pull the seat backward to release the seat frame front catches.
4. Remove the seat.

Note: *You can only remove the final row dual seats if the seat is equipped with release handles.*

Note: *The seat back does not fold forward.*

Removing the Seats - Double Cab In Van and Kombi Van

WARNING: Seats can weigh up to 60 kg (132 lb). Do not attempt to lift or carry a seat on your own.

Note: *Two persons must carry out this procedure.*

Transit (TTS) Vehicles Built From: 27-01-2020 Vehicles Built Up To: 20-09-2020, CG3796en enGBR, Edition date: 201911, First-Printing

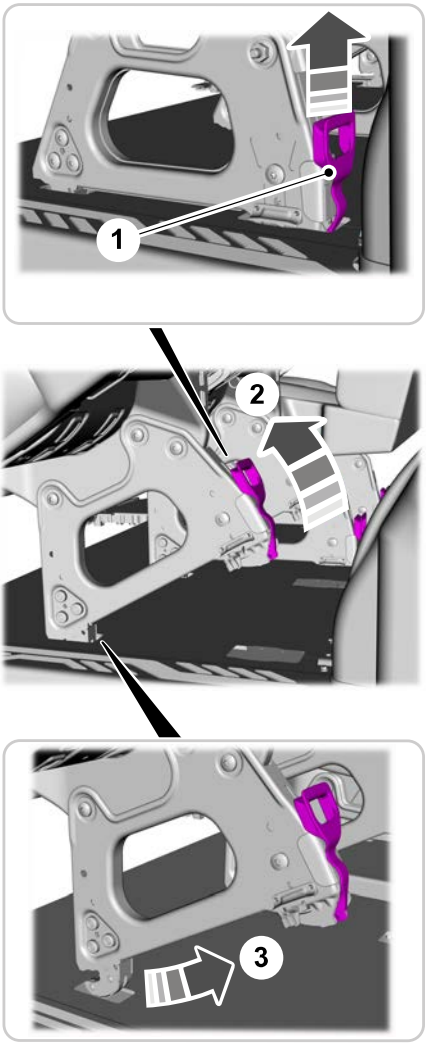

E208919

1. To remove the first seat, pull the strap located closest to the door.
2. Reach between the seats and pull the second strap.
3. Tilt the seat forward to release the seat frame floor catches.
4. Remove the seat.
5. To remove the second seat, pull the strap located between the side of the vehicle and the seat.
6. Pull the strap exposed by the removal of the first seat.
7. Tilt the seat forward to release the seat frame floor catches.
8. Remove the seat.

Installing the Seats

WARNING: Make sure that the floor catches are free from foreign material before installing the seats.

WARNING: Make sure that you securely fasten the seat catches when installing.

1. Align the seat frame front catches.
2. Push the seat forward to engage the seat frame front catches.
3. Align the seat frame rear catches.

Note: *Allow the seat to drop under its own weight for the last 15–20 cm (6–8 in).*

Transit (TTS) Vehicles Built From: 27-01-2020 Vehicles Built Up To: 20-09-2020, CG3796en enGBR, Edition date: 201911, First-Printing

HEATED SEATS

WARNING: Use caution when using the heated seat if you are unable to feel pain to your skin because of advanced age, chronic illness, diabetes, spinal cord injury, medication, alcohol use, exhaustion or other physical conditions. The heated seat could cause burns even at low temperatures, especially if used for long periods of time. Failure to follow this instruction could result in personal injury.

WARNING: Do not place anything on the seat that blocks the heat, for example a seat cover or a cushion. This could cause the seat to overheat. Failure to follow this instruction could result in personal injury.

WARNING: Do not poke sharp objects into the seat cushion or seat backrest. This could damage the heated seat element and cause it to overheat. Failure to follow this instruction could result in personal injury.

Do not switch the heated seat on if the seat is wet.

The heated seat button is on the climate control assembly.



Repeatedly press the button to adjust the temperature.

Transit (TTS) Vehicles Built From: 27-01-2020 Vehicles Built Up To: 20-09-2020, CG3796en enGBR, Edition date: 201911, First-Printing

WARNING: Do not plug optional electrical accessories into the cigar lighter socket. Incorrect use of the cigar lighter can cause damage not covered by the vehicle warranty, and can result in fire or serious injury.

WARNING: Do not use a power point for operating a cigar lighter. Incorrect use of the power points can cause damage not covered by the vehicle warranty, and can result in fire or serious injury.

Do not hang any accessory from the accessory plug.

Do not use the power point over the vehicle capacity of 12 volt DC 180 watts or a fuse may blow.

Keep the power point caps closed when not in use.

Note: *The power points turn off after 30 minutes when the ignition is switched off. The power points could turn off earlier if the vehicle battery charge level is low.*

Run the vehicle for full capacity use of the power point.

To prevent the battery from running out of charge:

- Do not use the power point longer than necessary when the vehicle is not running.
- Do not leave devices plugged in overnight or when you park your vehicle for extended periods.

Power points may be in the following locations:

- Inside the instrument panel storage compartment.
- On the front of the center console.
- Inside the cargo area.

230 Volt - 150 Watt Capacity AC Power Outlet

WARNING: Do not keep electrical devices plugged in the power point whenever the device is not in use. Do not use any extension cord with the 230 volt AC power point, since it will defeat the safety protection design. Doing so may cause the power point to overload due to powering multiple devices that can reach beyond the 150 watt load limit and could result in fire or serious injury.

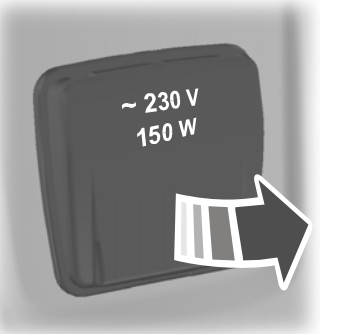

E98199

The power point is on the parking brake console.

When the indicator light on the power point is:

- On: The power point is working, the ignition is on and a device is plugged in.
- Off: The power point is off, the ignition is off or no device is plugged in.
- Flashing: The power point is in fault mode.

Transit (TTS) Vehicles Built From: 27-01-2020 Vehicles Built Up To: 20-09-2020, CG3796en enGBR, Edition date: 201911, First-Printing

The power outlet temporarily turns off power when in fault mode if the device exceeds the 150 watt limit. Unplug your device and switch the ignition off. Switch the ignition back on, but do not plug your device back in. Let the system cool off and switch the ignition off to reset the fault mode. Switch the ignition back on and make sure the indicator light remains on.

Do not use the power point for certain electric devices, including:

- Cathode-ray, tube-type televisions.
- Motor loads, such as vacuum cleaners, electric saws and other electric power tools or compressor-driven refrigerators.
- Measuring devices, which process precise data, such as medical equipment or measuring equipment.
- Other appliances requiring an extremely stable power supply such as microcomputer-controlled electric blankets or touch-sensor lamps.

230 Volt - 400 Watt Capacity AC Power Outlet

WARNING: Do not keep electrical devices plugged in the power point whenever the device is not in use. Do not use any extension cord with the 230 volt AC power point, since it will defeat the safety protection design. Doing so may cause the power point to overload due to powering multiple devices that can reach beyond the 400 watt load limit and could result in fire or serious injury.

Note: *This feature has a maximum output of 400 watts when the vehicle is in park (P).*

Note: *While in drive (D), the maximum outlet output is 300 watts.*



E299832

The power point is on the parking brake console.

When the indicator light on the power point is:

- On: The power point is working, the ignition is on and a device is plugged in.
- Off: The power point is off, the ignition is off or no device is plugged in.
- Flashing: The power point is in fault mode.

The power outlet temporarily turns off power when in fault mode if the device exceeds the 400 watt limit. Unplug your device and switch the ignition off. Switch the ignition back on, but do not plug your device back in. Let the system cool off and switch the ignition off to reset the fault mode. Switch the ignition back on and make sure the indicator light remains on.

Do not use the power point for certain electric devices, including:

- Cathode-ray, tube-type televisions.
- Motor loads, such as vacuum cleaners, electric saws and other electric power tools or compressor-driven refrigerators.

Transit (TTS) Vehicles Built From: 27-01-2020 Vehicles Built Up To: 20-09-2020, CG3796en enGBR, Edition date: 201911, First-Printing

- Measuring devices, which process precise data, such as medical equipment or measuring equipment.
- Other appliances requiring an extremely stable power supply such as microcomputer-controlled electric blankets or touch-sensor lamps.

CIGAR LIGHTER

WARNING: Do not plug optional electrical accessories into the cigar lighter socket. Incorrect use of the cigar lighter can cause damage not covered by the vehicle warranty, and can result in fire or serious injury.

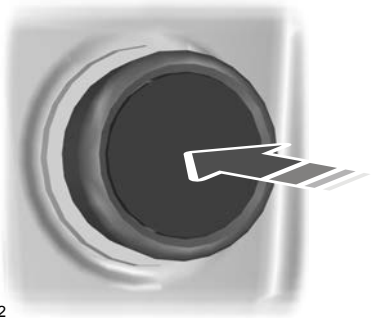

E103382

Press the element in to use the cigar lighter. It pops out after a short period of time.

Do not hold the cigar lighter element pressed in.

Note: *If the power supply does not work after you switch the ignition off, switch the ignition on.*

Note: *If you use the socket when the engine is not running, the battery may run out of charge.*

Note: *When you switch the ignition on, you can use the socket to power 12 volt appliances with a maximum current rating of 15 amps.*

Transit (TTS) Vehicles Built From: 27-01-2020 Vehicles Built Up To: 20-09-2020, CG3796en enGBR, Edition date: 201911, First-Printing

CUP HOLDERS

WARNING: Do not place hot drinks in the cup holders when your vehicle is moving.

WARNING: Make sure that cups placed in the holders do not obstruct your vision while driving.

OVERHEAD CONSOLE

WARNING: Do not place heavy objects in the overhead console. Failure to follow this instruction could result in personal injury or death in the event of a sudden stop or crash.



E189357

ASHTRAY



E171158

The ashtray can be placed in either outboard cup holder.

BOTTLE HOLDERS

WARNING: Do not place glass objects in the bottle holder.

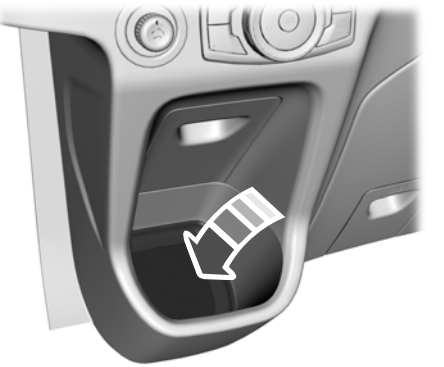

E171160

Transit (TTS) Vehicles Built From: 27-01-2020 Vehicles Built Up To: 20-09-2020, CG3796en enGBR, Edition date: 201911, First-Printing

UNDER SEAT STORAGE - VEHICLES WITH: PASSENGER DOUBLE SEAT, VEHICLES WITHOUT: REAR CLIMATE CONTROL, EXCLUDING: MILD HYBRID ELECTRIC VEHICLE (MHEV)

Front Passenger Seat

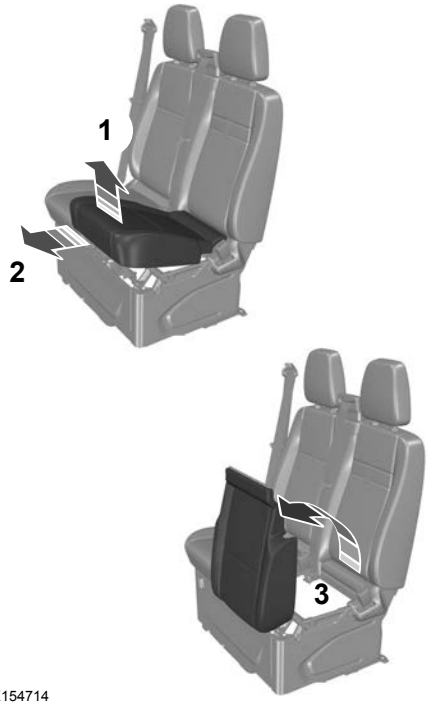

E154714

1. Lift the front of the passenger seat cushion.
2. Pull the seat cushion forward.
3. Tilt the seat cushion forward.

Note: *Both the inboard and outboard seats have a storage compartment.*

UNDER SEAT STORAGE - MILD HYBRID ELECTRIC VEHICLE (MHEV), VEHICLES WITH: PASSENGER DOUBLE SEAT/ REAR CLIMATE CONTROL

Front Passenger Seat

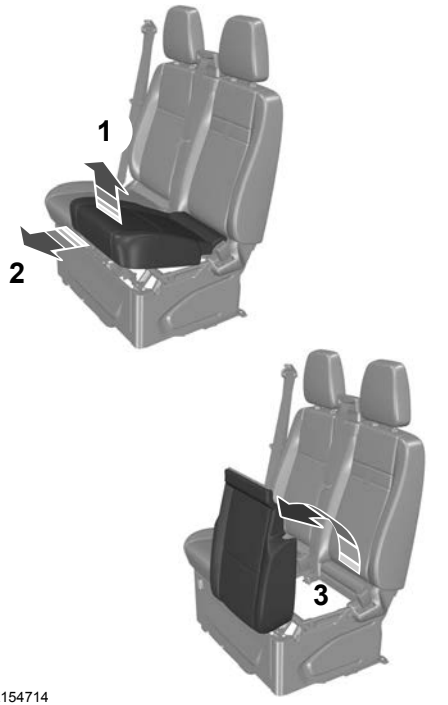

E154714

1. Lift the front of the passenger seat cushion.
2. Pull the seat cushion forward.
3. Tilt the seat cushion forward.

Transit (TTS) Vehicles Built From: 27-01-2020 Vehicles Built Up To: 20-09-2020, CG3796en enGBR, Edition date: 201911, First-Printing

Note: *Only the inboard seat has a storage compartment.*

FRONT DOOR STORAGE COMPARTMENT

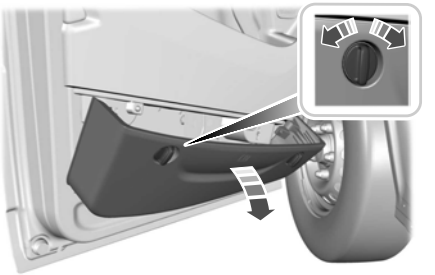

E169150

Turn the retaining clips counterclockwise to open the storage compartment.

DEVICE HOLDER

WARNING: Driving while distracted can result in loss of vehicle control, crash and injury. We strongly recommend that you use extreme caution when using any device that may take your focus off the road. Your primary responsibility is the safe operation of your vehicle. We recommend against the use of any hand-held device while driving and encourage the use of voice-operated systems when possible. Make sure you are aware of all applicable local laws that may affect the use of electronic devices while driving.



1. Fully lift the clamp.

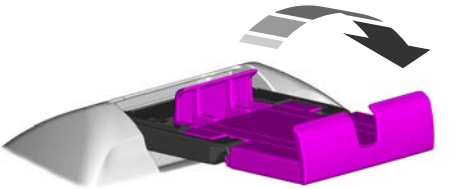

2. Fully rotate the clamp.

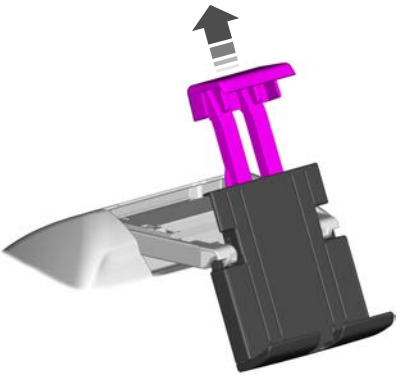

3. Lift the clamp.
4. Place your device on the base.
5. Release the clamp.

Transit (TTS) Vehicles Built From: 27-01-2020 Vehicles Built Up To: 20-09-2020, CG3796en enGBR, Edition date: 201911, First-Printing

Note: *Do not leave your device in the device holder when leaving your vehicle.*

OVERHEAD STORAGE

WARNING: Do not place heavy objects on the shelf. Failure to follow this instruction could result in personal injury or death in the event of a sudden stop or crash.



E169073

The maximum evenly distributed shelf load is 20 kg (44 lb).

REAR OVERHEAD STORAGE

WARNING: Do not place heavy objects on the shelf. Failure to follow this instruction could result in personal injury or death in the event of a sudden stop or crash.

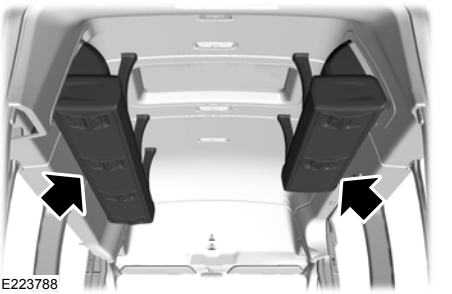

E223788

The maximum evenly distributed shelf load is 18 kg (40 lb).

Transit (TTS) Vehicles Built From: 27-01-2020 Vehicles Built Up To: 20-09-2020, CG3796en enGBR, Edition date: 201911, First-Printing

GENERAL INFORMATION

WARNING: Extended idling at high engine speeds can produce very high temperatures in the engine and exhaust system, creating the risk of fire or other damage.

WARNING: Do not park, idle or drive your vehicle on dry grass or other dry ground cover. The emission system heats up the engine compartment and exhaust system, creating the risk of fire.

WARNING: Do not start the engine in a closed garage or in other enclosed areas. Exhaust fumes can be toxic. Always open the garage door before you start the engine.

WARNING: Exhaust leaks may result in entry of harmful and potentially lethal fumes into the passenger compartment. If you smell exhaust fumes inside your vehicle, have your vehicle inspected immediately. Do not drive if you smell exhaust fumes.

If you disconnect the battery, your vehicle may exhibit some unusual driving characteristics for approximately 8 km (5 mi) after you reconnect it. This is because the engine management system must realign itself with the engine. You can disregard any unusual driving characteristics during this period.

The powertrain control system meets all Canadian interference-causing equipment standard requirements regulating the impulse electrical field or radio noise.

When you start the engine, avoid pressing the accelerator pedal before and during operation. Only use the accelerator pedal when you have difficulty starting the engine.

IGNITION SWITCH

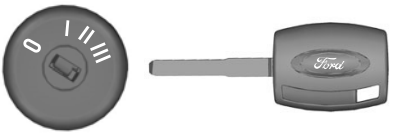

E72128

Note: *Make sure the key is clean before inserting it into any lock cylinder.*

0(off) - The ignition is off.

Note: *When you switch the ignition off and leave your vehicle, do not leave your key in the ignition. This could cause your vehicle battery to lose charge.*

I (accessory) - Allows the electrical accessories such as the radio to operate while the engine is not running.

Note: *Do not leave the ignition key in position **I** or **II** (without the engine running) for too long to avoid vehicle battery losing charge.*

II (on) - All electrical circuits operational. Warning lamps and indicators are illuminated.

III (start) - cranks the engine. Release the key as soon as the engine starts.

STARTING A DIESEL ENGINE - AUTOMATIC TRANSMISSION

WARNING: Do not use starting fluid, for example ether, in the air intake system. Such fluid could cause immediate explosive damage to the engine and possible personal injury.

Transit (TTS) Vehicles Built From: 27-01-2020 Vehicles Built Up To: 20-09-2020, CG3796en enGBR, Edition date: 201911, First-Printing

Before starting your vehicle, check the following:

- Make sure the headlamps and electrical accessories are off.
- Make sure the parking brake is on.
- Make sure the transmission is in park (P).

Starting the Engine

1. Turn the key to position ***II***.
2. Wait until the glow plug indicator turns off.
3. Fully press the brake pedal.

Note: *Do not touch the accelerator pedal.*

4. Turn the key to position ***III***.

Note: *Releasing the brake pedal when the engine is starting stops the engine cranking and the ignition returns to on.*

Note: *When the temperature is below -15ºC (5ºF), you may need to crank the engine for up to 10 seconds.*

Note: *You can only attempt to start the engine for a limited amount of time before the starting system temporarily disables. If you exceed the starting time limit, a message may appear and you cannot attempt to start the engine for at least 15 minutes.*

Failure to Start

If the engine does not start, do the following:

1. Fully press the brake pedal.
2. Apply the parking brake.
3. Shift into park (P).
4. Turn the key to position ***III*** until the engine starts.

Stopping the Engine When Your Vehicle is Stationary

1. Shift into park (P).
2. Turn the key to position ***0***.
3. Apply the parking brake.

Stopping the Engine When Your Vehicle is Moving

WARNING: Switching off the engine when your vehicle is still moving results in a significant decrease in braking assistance. Higher effort is required to apply the brakes and to stop your vehicle. A significant decrease in steering assistance could also occur. The steering does not lock, but higher effort could be required to steer your vehicle. When you switch the ignition off, some electrical circuits, for example airbags, also turn off. If you unintentionally switch the ignition off, shift into neutral (N) and restart the engine.

1. Shift into neutral and use the brakes to bring your vehicle to a safe stop.
2. Shift into park (P).
3. Turn the key to position ***0***.
4. Apply the parking brake.

Guarding Against Exhaust Fumes

WARNING: Exhaust leaks may result in entry of harmful and potentially lethal fumes into the passenger compartment. If you smell exhaust fumes inside your vehicle, have your vehicle inspected immediately. Do not drive if you smell exhaust fumes.

Transit (TTS) Vehicles Built From: 27-01-2020 Vehicles Built Up To: 20-09-2020, CG3796en enGBR, Edition date: 201911, First-Printing

Important Ventilating Information

If you stop your vehicle and then leave the engine idling for long periods, we recommend that you do one of the following:

- Open the windows at least 3 cm (1 in).
- Set your climate control to outside air.

Glow Plug Indicator



If it illuminates, wait until it turns off before starting.

Engine Warning Lamps



Malfunction Indicator Lamp

Check Engine

If it illuminates when the engine is running this indicates a malfunction. The On Board Diagnostics system has detected a malfunction of the vehicle emission control system.

If it flashes, engine misfire may be occurring. Increased exhaust gas temperatures could damage the diesel particulate filter or other vehicle components. Avoid heavy acceleration and deceleration and have your vehicle immediately serviced.



Powertrain Warning Lamp

If it illuminates when the engine is running this indicates a malfunction. If it flashes when you are driving, immediately reduce the vehicle speed. Avoid heavy acceleration and deceleration and have your vehicle immediately serviced.

If both lamps illuminate when the engine is running, stop your vehicle as soon as it is safe to do so. Continuing to drive your vehicle may cause reduced power or the engine to stop. Switch the ignition off and attempt to restart the engine. Have your vehicle immediately checked.

STARTING A DIESEL ENGINE - MANUAL TRANSMISSION

Before starting your vehicle, check the following:

- Make sure the headlamps and electrical accessories are off.
- Make sure the parking brake is on.
- Make sure the transmission is in neutral.

Starting the Engine

1. Turn the key to position ***II***.
2. Wait until the glow plug indicator turns off.
3. Fully press the clutch pedal.

Note: *Do not touch the accelerator pedal.*

4. Turn the key to position ***III***.

Note: *Releasing the clutch pedal when the engine is starting stops the engine cranking and the ignition returns to on.*

Note: *When the temperature is below -15°C (5°F), you may need to crank the engine for up to 10 seconds.*

Note: *You can only attempt to start the engine for a limited amount of time before the starting system temporarily disables. If you exceed the starting time limit, a message may appear and you cannot attempt to start the engine for at least 15 minutes.*

Transit (TTS) Vehicles Built From: 27-01-2020 Vehicles Built Up To: 20-09-2020, CG3796en enGBR, Edition date: 201911, First-Printing

Failure to Start

If the engine does not start, do the following:

1. Fully press the brake pedal.
2. Apply the parking brake.
3. Shift into neutral.
4. Turn the key to position ***III*** until the engine starts.

Stopping the Engine When Your Vehicle is Stationary

1. Shift into neutral.
2. Turn the key to position ***0***.
3. Apply the parking brake.

Stopping the Engine When Your Vehicle is Moving

WARNING: Switching off the engine when your vehicle is still moving results in a significant decrease in braking assistance. Higher effort is required to apply the brakes and to stop your vehicle. A significant decrease in steering assistance could also occur. The steering does not lock, but higher effort could be required to steer your vehicle. When you switch the ignition off, some electrical circuits, for example airbags, also turn off. If you unintentionally switch the ignition off, shift into neutral (N) and restart the engine.

1. Shift into neutral and use the brakes to bring your vehicle to a safe stop.
2. Turn the key to position ***0***.
3. Apply the parking brake.

Guarding Against Exhaust Fumes

WARNING: Exhaust leaks may result in entry of harmful and potentially lethal fumes into the passenger compartment. If you smell exhaust fumes inside your vehicle, have your vehicle inspected immediately. Do not drive if you smell exhaust fumes.

Important Ventilating Information

If you stop your vehicle and then leave the engine idling for long periods, we recommend that you do one of the following:

- Open the windows at least 3 cm (1 in).
- Set your climate control to outside air.

Glow Plug Indicator



If it illuminates, wait until it turns off before starting.

Engine Warning Lamps



Malfunction Indicator Lamp

Check Engine

If it illuminates when the engine is running this indicates a malfunction. The On Board Diagnostics system has detected a malfunction of the vehicle emission control system.

If it flashes, engine misfire may be occurring. Increased exhaust gas temperatures could damage the diesel particulate filter or other vehicle components. Avoid heavy acceleration and deceleration and have your vehicle immediately serviced.



Powertrain Warning Lamp

Transit (TTS) Vehicles Built From: 27-01-2020 Vehicles Built Up To: 20-09-2020, CG3796en enGBR, Edition date: 201911, First-Printing

If it illuminates when the engine is running this indicates a malfunction. If it flashes when you are driving, immediately reduce the vehicle speed. Avoid heavy acceleration and deceleration and have your vehicle immediately serviced.

If both lamps illuminate when the engine is running, stop your vehicle as soon as it is safe to do so. Continuing to drive your vehicle may cause reduced power or the engine to stop. Switch the ignition off and attempt to restart the engine. Have your vehicle immediately checked.

SWITCHING OFF THE ENGINE

Vehicles With a Turbocharger

WARNING: Do not switch the engine off when it is running at high speed. If you do, the turbocharger will continue running after the engine oil pressure has dropped to zero. This will lead to premature turbocharger bearing wear.

Release the accelerator pedal. Wait until the engine has reached idle speed and then switch it off.

Transit (TTS) Vehicles Built From: 27-01-2020 Vehicles Built Up To: 20-09-2020, CG3796en enGBR, Edition date: 201911, First-Printing

HYBRID VEHICLE OPERATION - MILD HYBRID ELECTRIC VEHICLE (MHEV)

Your vehicle has a 48 volt mild hybrid system. The system is designed to help reduce fuel consumption and CO_2 emissions by using regenerative charging and stopping the engine when your vehicle is coasting at a speed of 12 km/h (7 mph).

Note: *You can set the speed at which the system stops the engine through the information display. See* ***Setting the Engine Stop Speed*** *(page 128).*

Note: *Regenerative charging results in a greater degree of engine braking. This is normal.*

Transit (TTS) Vehicles Built From: 27-01-2020 Vehicles Built Up To: 20-09-2020, CG3796en enGBR, Edition date: 201911, First-Printing

WHAT IS AUTO-START-STOP

The system is designed to help reduce fuel consumption and CO_2 emissions by stopping the engine when it is idling, for example at traffic lights.

AUTO-START-STOP PRECAUTIONS

WARNING: Apply the parking brake, shift into neutral, switch the ignition off and remove the key before you leave your vehicle. Failure to follow this instruction could result in personal injury or death.

WARNING: Apply the parking brake, shift into neutral, switch the ignition off and remove the key before you open the hood or have any service or repair work completed. If you do not switch the ignition off, the engine could restart at any time. Failure to follow this instruction could result in personal injury or death.

SWITCHING AUTO-START-STOP ON AND OFF

The system turns on when you switch the ignition on.



Press the switch to switch the system off.

Note: ***OFF*** *illuminates in the switch.*

Press the switch again to switch the system back on.

Note: *The system is designed to turn off if it detects a malfunction. If the system malfunctions, have your vehicle checked as soon as possible.*

STOPPING THE ENGINE

1. Stop your vehicle.
2. Shift into neutral.
3. Release the clutch pedal and the accelerator pedal.

Note: *To obtain maximum benefit from the system, shift into neutral and release the clutch pedal whenever you stop your vehicle for more than three seconds.*

Note: *Power assist steering turns off when the engine stops.*

RESTARTING THE ENGINE

Press the clutch pedal.

A message appears in the information display if the system requires you to take action.

Message	Condition	Action
Auto StartStop Press a pedal to start engine	The system needs to restart the engine but requires your confirmation.	Press the accelerator pedal, brake pedal or clutch pedal to restart the engine.
Auto StartStop Select neutral to start engine	The system needs to restart the engine but cannot because the transmission is in gear.	Shift into neutral to restart the engine.

Transit (TTS) Vehicles Built From: 27-01-2020 Vehicles Built Up To: 20-09-2020, CG3796en enGBR, Edition date: 201911, First-Printing

AUTO-START-STOP INDICATORS

WARNING: The system may require the engine to automatically restart when the auto-start-stop indicator illuminates green or flashes amber. Failure to follow this instruction could result in personal injury.



The Auto-Start-Stop indicator illuminates green when the engine stops. It flashes amber and a message appears when you need to take action.



The Auto-Start-Stop indicator illuminates gray with a strikethrough when the system is not available.

Note: *You can display the reason why the system is not available in the information display.*

AUTO-START-STOP AUDIBLE WARNING

The Auto-Start-Stop audible warning sounds if you open the driver door when the system has stopped the engine.

AUTO-START-STOP – TROUBLESHOOTING

Auto-Start-Stop – Information Messages

Message	Condition	Action
Auto StartStop Manual restart required	The system is not functioning.	Shift into neutral and restart the engine yourself.

Transit (TTS) Vehicles Built From: 27-01-2020 Vehicles Built Up To: 20-09-2020, CG3796en enGBR, Edition date: 201911, First-Printing

Auto-Start-Stop – Frequently Asked Questions

Why does the engine not always stop when I expect it to?

The system is designed to work in a way that complements other vehicle systems, allowing them to operate at optimum performance.

The system does not stop the engine if:

- The driver door is open.
- Your vehicle is at high altitude.
- The heated windshield is on.
- The engine is warming up.
- The outside temperature is too low or too high.
- The battery charge is low.
- The battery temperature is outside the optimal operating range.
- The engine is required to run to maintain interior climate and reduce fogging.

Why does the engine sometimes restart when I do not expect it to?

The system is designed to work in a way that complements other vehicle systems, allowing them to operate at optimum performance.

The system restarts the engine if:

- You switch the heated windshield on.
- You switch maximum defrost on.
- Your vehicle starts to roll downhill in neutral.
- The engine is required to run to maintain adequate brake system assistance.
- The engine is required to run to maintain interior climate and reduce fogging.

Can I permanently switch the system off?

No. The system plays an important role in reducing the fuel consumption and the CO_2 emissions.

Will the frequent engine starts cause parts to wear out?

Your vehicle has an enhanced battery and starter motor that are designed for the increased number of engine starts.

Transit (TTS) Vehicles Built From: 27-01-2020 Vehicles Built Up To: 20-09-2020, CG3796en enGBR, Edition date: 201911, First-Printing

WHAT IS AUTO-START-STOP

The system is designed to help reduce fuel consumption and CO_2 emissions by stopping the engine when it is idling, for example at traffic lights or when your vehicle is coasting at a speed less than the engine stop speed that you have set. See **Setting the Engine Stop Speed** (page 128). The system is designed to stop the engine when the transmission is in gear or in neutral.

AUTO-START-STOP PRECAUTIONS

WARNING: Apply the parking brake, shift into neutral, switch the ignition off and remove the key before you leave your vehicle. Failure to follow this instruction could result in personal injury or death.

WARNING: Apply the parking brake, shift into neutral, switch the ignition off and remove the key before you open the hood or have any service or repair work completed. If you do not switch the ignition off, the engine could restart at any time. Failure to follow this instruction could result in personal injury or death.

AUTO-START-STOP SETTINGS

Setting the Engine Stop Speed

1. Using the information display controls on the steering wheel, select ***Settings***.
2. Select ***Vehicle settings***.
3. Select ***Rolling StartStop***.
4. Select a setting and press the ***OK*** button.

SWITCHING AUTO-START-STOP ON AND OFF

The system turns on when you switch the ignition on.



Press the switch to switch the system off.

Note: ***OFF*** *illuminates in the switch.*

Press the switch again to switch the system back on.

Note: *The system is designed to turn off if it detects a malfunction. If the system malfunctions, have your vehicle checked as soon as possible.*

STOPPING THE ENGINE

Stopping the Engine in Gear

1. Press the brake pedal and slow your vehicle down to 12 km/h (7 mph) or less.

Note: *You can set the speed at which the system stops the engine through the information display.*

2. Fully press the clutch pedal.

Note: *Power assist steering remains on when the engine stops.*

Stopping the Engine in Neutral

1. Press the brake pedal and slow your vehicle down to 12 km/h (7 mph) or less.

Note: *You can set the speed at which the system stops the engine through the information display.*

2. Press the clutch pedal and shift into neutral.
3. Release the clutch pedal.

Note: *Power assist steering remains on when the engine stops.*

Transit (TTS) Vehicles Built From: 27-01-2020 Vehicles Built Up To: 20-09-2020, CG3796en enGBR, Edition date: 201911, First-Printing

RESTARTING THE ENGINE

Restarting the Engine in Gear

Release the brake pedal.

Restarting the Engine in Neutral

1. Fully press the clutch pedal.
2. Select a gear.

AUTO-START-STOP INDICATORS

WARNING: The system may require the engine to automatically restart when the auto-start-stop indicator illuminates green or flashes amber. Failure to follow this instruction could result in personal injury.



The Auto-Start-Stop indicator illuminates green when the engine stops. It flashes amber and a message appears when you need to take action.



The Auto-Start-Stop indicator illuminates gray with a strikethrough when the system is not available.

Note: *You can display the reason why the system is not available in the information display.*

AUTO-START-STOP AUDIBLE WARNING

The Auto-Start-Stop audible warning sounds if you open the driver door when the system has stopped the engine.

AUTO-START-STOP – TROUBLESHOOTING

Auto-Start-Stop – Information Messages

Message	Condition	Action
Auto StartStop Manual restart required	The system is not functioning.	Shift into neutral and restart the engine yourself.
Auto StartStop Select neutral to start engine	The system cannot restart the engine.	Shift into neutral.
Auto StartStop Press clutch to start engine	The system cannot restart the engine.	Fully press the clutch pedal.

Transit (TTS) Vehicles Built From: 27-01-2020 Vehicles Built Up To: 20-09-2020, CG3796en enGBR, Edition date: 201911, First-Printing

Auto-Start-Stop – Frequently Asked Questions

Why does the engine not always stop when I expect it to?

The system is designed to work in a way that complements other vehicle systems, allowing them to operate at optimum performance.

The system does not stop the engine if:

- The driver door is open.
- The driver seatbelt is unfastened.
- The engine is warming up.
- The outside temperature is too low or too high.
- The battery charge is low.
- The battery temperature is outside the optimal operating range.
- The engine is required to run to maintain interior climate and reduce fogging.

Why does the engine sometimes restart when I do not expect it to?

The system is designed to work in a way that complements other vehicle systems, allowing them to operate at optimum performance.

The system restarts the engine if:

- You switch ***MAX A/C*** on.
- You switch maximum defrost on.
- Your vehicle starts to roll downhill in neutral.
- The engine is required to run to maintain adequate brake system assistance.
- The engine is required to run to maintain interior climate and reduce fogging.

Can I permanently switch the system off?

No. The system plays an important role in reducing the fuel consumption and the CO_2 emissions.

Will the frequent engine starts cause parts to wear out?

Your vehicle has an enhanced battery and starter generator that are designed for the increased number of engine starts.

Transit (TTS) Vehicles Built From: 27-01-2020 Vehicles Built Up To: 20-09-2020, CG3796en enGBR, Edition date: 201911, First-Printing

WHAT IS AUTO-START-STOP

The system is designed to help reduce fuel consumption and CO_2 emissions by stopping the engine when it is idling, for example at traffic lights.

AUTO-START-STOP PRECAUTIONS

WARNING: Apply the parking brake, shift into park (P), switch the ignition off and remove the key before you leave your vehicle. Failure to follow this instruction could result in personal injury or death.

WARNING: Apply the parking brake, shift into park (P), switch the ignition off and remove the key before you open the hood or have any service or repair work completed. If you do not switch the ignition off, the engine could restart at any time. Failure to follow this instruction could result in personal injury or death.

SWITCHING AUTO-START-STOP ON AND OFF

The system turns on when you switch the ignition on.



Press the switch to switch the system off.

Note: ***OFF*** *illuminates in the switch.*

Press the switch again to switch the system back on.

Note: *The system is designed to turn off if it detects a malfunction. If the system malfunctions, have your vehicle checked as soon as possible.*

STOPPING THE ENGINE

Stop your vehicle, keep your foot on the brake pedal and the transmission in drive (D).

Note: *The engine stops when you shift into park (P) whether you have your foot on the brake pedal or not.*

Note: *Power assist steering turns off when the engine stops.*

RESTARTING THE ENGINE

Release the brake pedal or press the accelerator pedal.

A message appears in the information display if the system requires you to take action.

Message	Condition	Action
Auto StartStop Press brake to start engine	The system needs to restart the engine but requires your confirmation.	Press the brake pedal to restart the engine.
Auto StartStop Press a pedal to start engine	The system needs to restart the engine but requires your confirmation.	Press the brake pedal or the accelerator pedal to restart the engine.

Transit (TTS) Vehicles Built From: 27-01-2020 Vehicles Built Up To: 20-09-2020, CG3796en enGBR, Edition date: 201911, First-Printing

AUTO-START-STOP INDICATORS

WARNING: The system may require the engine to automatically restart when the auto-start-stop indicator illuminates green or flashes amber. Failure to follow this instruction could result in personal injury.



The Auto-Start-Stop indicator illuminates green when the engine stops. It flashes amber and a message appears when you need to take action.



The Auto-Start-Stop indicator illuminates gray with a strikethrough when the system is not available.

Note: *You can display the reason why the system is not available in the information display.*

AUTO-START-STOP – TROUBLESHOOTING

Auto-Start-Stop – Information Messages

Message	Condition	Action
Auto StartStop Shift to P Restart engine	The system is not functioning.	Shift into park (P) and restart the engine yourself.
Auto StartStop Manual restart required	The system is not functioning.	Restart the engine yourself.

Transit (TTS) Vehicles Built From: 27-01-2020 Vehicles Built Up To: 20-09-2020, CG3796en enGBR, Edition date: 201911, First-Printing

Auto-Start-Stop – Frequently Asked Questions

Why does the engine not always stop when I expect it to?

The system is designed to work in a way that complements other vehicle systems, allowing them to operate at optimum performance.

The system does not stop the engine if:

- The driver door is open.
- The driver seatbelt is unfastened.
- Your vehicle is at high altitude.
- The heated windshield is on.
- The transmission is in manual (M).
- Your vehicle is on a steep grade.
- The engine is warming up.
- The outside temperature is too low or too high.
- The battery charge is low.
- The battery temperature is outside the optimal operating range.
- The engine is required to run to maintain interior climate and reduce fogging.

Why does the engine sometimes restart when I do not expect it to?

The system is designed to work in a way that complements other vehicle systems, allowing them to operate at optimum performance.

The system restarts the engine if:

- You switch the heated windshield on.
- You switch maximum defrost on.
- Your vehicle starts to roll downhill in neutral.
- The engine is required to run to maintain adequate brake system assistance.
- The engine is required to run to maintain interior climate and reduce fogging.

Can I permanently switch the system off?

No. The system plays an important role in reducing the fuel consumption and the CO_2 emissions.

Will the frequent engine starts cause parts to wear out?

Your vehicle has an enhanced battery and starter motor that are designed for the increased number of engine starts.

Transit (TTS) Vehicles Built From: 27-01-2020 Vehicles Built Up To: 20-09-2020, CG3796en enGBR, Edition date: 201911, First-Printing

SAFETY PRECAUTIONS

WARNING: Do not overfill the fuel tank. The pressure in an overfilled tank may cause leakage and lead to fuel spray and fire.

WARNING: The fuel system may be under pressure. If you hear a hissing sound near the fuel filler inlet, do not refuel until the sound stops. Otherwise, fuel may spray out, which could cause serious personal injury.

WARNING: Fuels can cause serious injury or death if misused or mishandled.

WARNING: Fuel may contain benzene, which is a cancer-causing agent.

WARNING: When refueling always shut the engine off and never allow sparks or open flames near the fuel tank filler valve. Never smoke or use a cell phone while refueling. Fuel vapor is extremely hazardous under certain conditions. Avoid inhaling excess fumes.

Follow these guidelines when refueling:

- Extinguish all smoking materials and any open flames before refueling your vehicle.
- Always switch the engine off before refueling.
- Automotive fuels can be harmful or fatal if swallowed. Fuel is highly toxic and if swallowed can cause death or permanent injury. If fuel is swallowed immediately call a physician, even if no symptoms are immediately apparent. The toxic effects of fuel may not be apparent for hours.
- Avoid inhaling fuel vapors. Inhaling fuel vapor can lead to eye and respiratory tract irritation. In severe cases, excessive or prolonged breathing of fuel vapor can cause serious illness and permanent injury.
- Avoid getting fuel in your eyes. If you splash fuel in your eyes, immediately remove contact lenses (if worn), flush with water for 15 minutes and seek medical attention. Failure to seek proper medical attention could lead to permanent injury.
- Fuels can be harmful if absorbed through the skin. If you splash fuel on your skin, clothing or both, promptly remove contaminated clothing and thoroughly wash your skin with soap and water. Repeated or prolonged skin contact causes skin irritation.
- Be particularly careful if you are taking Antabuse or other forms of Disulfiram for the treatment of alcoholism. Breathing fuel vapors could cause an adverse reaction, serious personal injury or sickness. Immediately call a physician if you experience any adverse reactions.

FUEL QUALITY - HYDROTREATED VEGETABLE OIL

WARNING: Do not mix hydrotreated vegetable oil with gasoline, gasohol or alcohol. This could cause an explosion. Failure to follow this instruction could result in personal injury or death.

Use hydrotreated vegetable oil that meets the specification defined by EN 15940 or the relevant national specification.

Transit (TTS) Vehicles Built From: 27-01-2020 Vehicles Built Up To: 20-09-2020, CG3796en enGBR, Edition date: 201911, First-Printing

Note: *Do not use normal vegetable oil as this may cause engine damage not covered by the vehicle Warranty.*

Note: *We do not recommend the use of additional additives to prevent fuel waxing.*

FUEL QUALITY - DIESEL

WARNING: Do not mix diesel with gasoline, gasohol or alcohol. This could cause an explosion.

Use diesel that meets the specification defined by EN 590 or the relevant national specification.



E268503

Your vehicle is suitable for use with biodiesel blends up to 7% (B7).

Note: *We recommend that you only use high quality fuel. We do not recommend the use of aftermarket fuel additives or other engine treatments.*

Note: *We do not recommend the use of additional additives to prevent fuel waxing.*

Long-Term Storage

Most diesel fuels contain biodiesel. We recommend that you fill the fuel tank with fuel that does not contain biodiesel if you intend to store your vehicle for more than two months.

FUEL FILLER FUNNEL LOCATION

The fuel filler funnel is in the under seat storage compartment or in the glove compartment.

RUNNING OUT OF FUEL

Running out of fuel can cause damage not covered by the vehicle Warranty.

If your vehicle runs out of fuel:

- Add a minimum of 5 L (1.1 gal) of fuel to restart the engine.
- You may need to switch the ignition from off to on several times after refueling to allow the fuel system to pump the fuel from the tank to the engine. When restarting, cranking time takes a few seconds longer than normal.

Note: *If your vehicle is on a steep slope, more fuel may be required.*

Filling a Portable Fuel Container

WARNING: Flow of fuel through a fuel pump nozzle can produce static electricity. This can cause a fire if you are filling an ungrounded fuel container.

Use the following guidelines to avoid electrostatic charge build-up, which can produce a spark, when filling an ungrounded fuel container:

- Only use an approved fuel container to transfer fuel to your vehicle. Place the container on the ground when filling it.
- Do not fill a fuel container when it is inside your vehicle (including the cargo area).

Transit (TTS) Vehicles Built From: 27-01-2020 Vehicles Built Up To: 20-09-2020, CG3796en enGBR, Edition date: 201911, First-Printing

- Keep the fuel pump nozzle in contact with the fuel container when filling it.
- Do not use a device that holds the fuel pump nozzle lever in the fill position.

Adding Fuel From a Portable Fuel Container

WARNING: Do not insert the nozzle of a fuel container or an aftermarket funnel into the fuel filler neck. This may damage the fuel system filler neck or its seal and cause fuel to run onto the ground.

WARNING: Do not try to pry open or push open the capless fuel system with foreign objects. This could damage the fuel system and its seal and cause injury to you or others.

WARNING: Do not dispose of fuel in the household refuse or the public sewage system. Use an authorized waste disposal facility.

When refueling the vehicle fuel tank from a fuel container, use the fuel filler funnel included with your vehicle. See **Fuel Filler Funnel Location** (page 135).

Note: *Do not use aftermarket funnels as they may not work with the capless fuel system and can damage it.*

When refueling the vehicle fuel tank from a fuel container, do the following:

1. Fully open the fuel filler door.
2. Fully insert the fuel filler funnel into the fuel filler inlet.


E157452

3. Add fuel to your vehicle from the fuel container.
4. Remove the fuel filler funnel.
5. Fully close the fuel filler door.
6. Clean the fuel filler funnel and place it back in your vehicle or correctly dispose of it.

Note: *Extra funnels can be purchased from an authorized dealer if you choose to dispose of the funnel.*

REFUELING

WARNING: Do not overfill the fuel tank. The pressure in an overfilled tank may cause leakage and lead to fuel spray and fire.

WARNING: Do not pry open the fuel tank filler valve. This could damage the fuel system. Failure to follow this instruction could result in fire, personal injury or death.

WARNING: Do not remove the fuel pump nozzle from its fully inserted position when refueling.

Transit (TTS) Vehicles Built From: 27-01-2020 Vehicles Built Up To: 20-09-2020, CG3796en enGBR, Edition date: 201911, First-Printing

WARNING: When refueling always shut the engine off and never allow sparks or open flames near the fuel tank filler valve. Never smoke or use a cell phone while refueling. Fuel vapor is extremely hazardous under certain conditions. Avoid inhaling excess fumes.

WARNING: Wait at least five seconds before removing the fuel pump nozzle to allow any residual fuel to drain into the fuel tank.

WARNING: Stop refueling when the fuel pump nozzle automatically shuts off for the first time. Failure to follow this will fill the expansion space in the fuel tank and could lead to fuel overflowing.

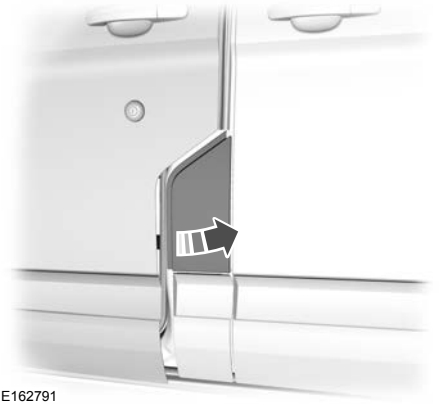

E162791

1. Open the left-hand front door.
2. Fully open the fuel filler door.

Note: *Your vehicle does not have a fuel tank filler cap.*

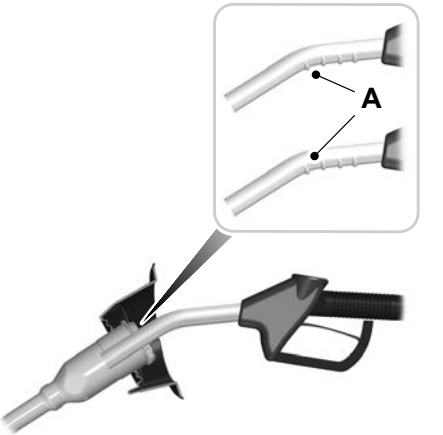

E139202

3. Insert the fuel pump nozzle up to the first notch on the nozzle A. Keep it resting on the cover of the fuel tank filler pipe opening.

Note: *The fuel filler nozzle inhibitor only opens when you insert the correct fuel pump nozzle.*

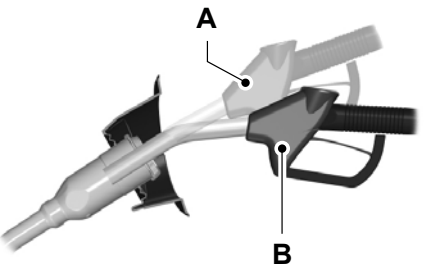

E139203

4. Hold the fuel pump nozzle in position B when refueling. Holding the fuel pump nozzle in position A could affect the flow of fuel and shut off the fuel pump nozzle before the fuel tank is full.

Transit (TTS) Vehicles Built From: 27-01-2020 Vehicles Built Up To: 20-09-2020, CG3796en enGBR, Edition date: 201911, First-Printing

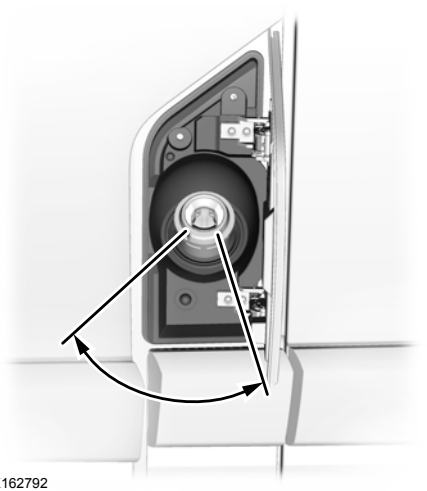

E162792

5. Operate the fuel pump nozzle within the area shown.



E119081

6. Slightly raise the fuel pump nozzle and then slowly remove it.
7. Fully close the fuel filler door.

Note: *Do not attempt to start the engine if you have filled the fuel tank with incorrect fuel. Incorrect fuel use can cause damage not covered by the vehicle Warranty. Have your vehicle immediately checked.*

System Warnings (If Equipped)

If the fuel filler nozzle inhibitor does not fully close a warning message appears in the information display.

1. Stop your vehicle as soon as it is safe to do so and switch the engine off.
2. Shift into park (P) or neutral (N).
3. Apply the parking brake.
4. Open the left-hand front door.
5. Fully open the fuel filler door.
6. Check the fuel filler inlet and the area around it for any items or debris that may be obstructing its movement.
7. Fully insert a fuel pump nozzle or the fuel filler funnel provided with your vehicle into the fuel filler inlet. See **Fuel Filler Funnel Location** (page 135). This action should dislodge any debris that may be preventing the fuel filler inlet from fully closing.
8. Remove the fuel pump nozzle or fuel filler funnel from the fuel filler inlet.
9. Fully close the fuel filler door.

Note: *If this action corrects the problem the message may not immediately reset. If the message remains and the service engine soon warning lamp illuminates, have your vehicle checked as soon as possible.*

Low Fuel Level Warning Lamp



If it illuminates when you are driving, refuel as soon as possible.

Low Fuel Level Audible Warning

A warning tone sounds and a message appears in the information display when the distance to empty reaches 80 km (50 mi). A warning tone sounds and a message appears in the information display again at the following distance to empty parameters:

- 40 km (20 mi)
- 20 km (10 mi)
- 0 km (0 mi)

Transit (TTS) Vehicles Built From: 27-01-2020 Vehicles Built Up To: 20-09-2020, CG3796en enGBR, Edition date: 201911, First-Printing

Note: *The low fuel reminder appears at different fuel gauge positions depending on fuel economy conditions. This variation is normal.*

FUEL CONSUMPTION

We derive CO2 and fuel consumption figures in laboratory tests according to Regulation (EC) 715/2007 or CR (EC) 692/2008 and subsequent amendments.

They are intended as a comparison between makes and models of vehicles. They are not intended to represent the real world fuel consumption you may get from your vehicle.

Real world fuel consumption is governed by many factors, for example driving style, high speed driving, stop-start driving, air conditioning usage, add-on accessories, payload and towing.

Advertised Capacity

The advertised capacity is the maximum amount of fuel that you can add to the fuel tank when the fuel gauge indicates empty. See **Capacities and Specifications** (page 307).

In addition, the fuel tank contains an empty reserve. The empty reserve is an unspecified amount of fuel that remains in the fuel tank when the fuel gauge indicates empty.

Note: *The amount of fuel in the empty reserve varies and should not be relied upon to increase driving range.*

Fuel Economy

Your vehicle calculates fuel economy figures through the trip computer average fuel function. See **Trip Computer** (page 91).

The first 1,500 km (1,000 mi) of driving is the break-in period of the engine. A more accurate measurement is obtained after 3,000 km (2,000 mi).

Impacting Fuel Economy

- Incorrect tire inflation pressures. See **Tire Pressures** (page 290).
- Fully loading your vehicle.
- Carrying unnecessary weight.
- Adding certain accessories to your vehicle such as bug deflectors, rollbars or light bars, running boards and ski racks.
- Using fuel blended with alcohol. See **Fuel Quality** (page 135).
- Fuel economy may decrease with lower temperatures.
- Fuel economy may decrease when driving short distances.
- You may get better fuel economy when driving on flat terrain than when driving on hilly terrain.

Transit (TTS) Vehicles Built From: 27-01-2020 Vehicles Built Up To: 20-09-2020, CG3796en enGBR, Edition date: 201911, First-Printing

SELECTIVE CATALYTIC REDUCTANT SYSTEM

Your vehicle has a selective catalytic reductant system. This reduces exhaust emission levels by injecting AdBlue® into the exhaust system. The engine does not start if you tamper with or disable the selective catalytic reductant system.

For the system to correctly operate, you must maintain the fluid level.

Note: *When you switch the engine off the selective catalytic reductant system pump runs for a short period of time. This is normal.*

AdBlue® Guidelines

- Only use AdBlue® certified to ISO-22241.
- Do not put in the vehicle fuel tank. This can cause engine damage not covered by the vehicle Warranty.
- Do not overfill the AdBlue® tank.
- Do not dilute with water or any other liquid.
- Do not re-use an empty fluid container.
- Do not store in direct sunlight.
- Store at temperatures between -5°C (23°F) and 20°C (68°F).
- Do not store fluid containers in your vehicle.
- The fluid is non-flammable, non-toxic, colorless and water-soluble.
- Immediately remove any residue on painted surfaces when filling with AdBlue®.

Filling the AdBlue® Tank



E204215

The AdBlue® tank filler pipe is next to the fuel tank filler pipe and has a blue cap. Fill the tank using a fluid pump at an AdBlue® filling station or an AdBlue® container.

Filling in Cold Climates

AdBlue® may freeze when the temperature is below -11°C (12°F). Your vehicle has a preheating system which allows the fluid to operate below -11°C (12°F). If you overfill the AdBlue® tank and the fluid freezes, it may cause damage not covered by the vehicle Warranty.

Transit (TTS) Vehicles Built From: 27-01-2020 Vehicles Built Up To: 20-09-2020, CG3796en enGBR, Edition date: 201911, First-Printing

Filling the AdBlue® Tank Using a Fuel Station Pump

WARNING: Do not allow diesel exhaust fluid (AdBlue) to come into contact with eyes, skin or clothing. Should the fluid come into contact with eyes, flush them with plenty of water and seek medical attention. Clean affected skin with soap and water. If swallowed, drink plenty of water and seek medical attention immediately.

WARNING: Refill the diesel exhaust fluid (AdBlue) tank in a well-ventilated area. When removing the tank cap or a container cap, ammonia vapor may escape. Ammonia vapor is an irritant to the eyes, skin and mucous membranes. Inhaling ammonia vapor can cause burning to the eyes, throat and nose resulting in watering eyes or severe coughing.

Filling the AdBlue® tank using a fuel station pump is similar to refueling your vehicle.

1. Fully open the fuel filler door.

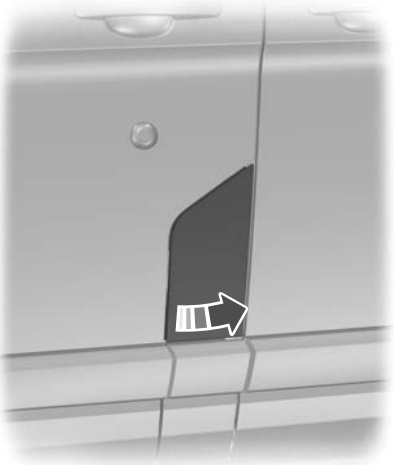

E144358

2. Remove the AdBlue® tank filler cap.
3. Fully insert the AdBlue® pump nozzle.

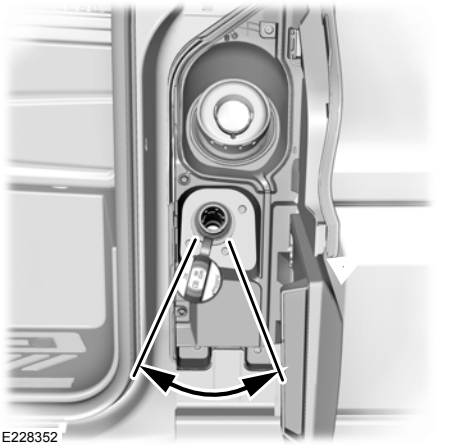

E228352

4. Operate the AdBlue® pump nozzle within the area shown.

Transit (TTS) Vehicles Built From: 27-01-2020 Vehicles Built Up To: 20-09-2020, CG3796en enGBR, Edition date: 201911, First-Printing

Note: *The pump nozzle shuts off when the tank is full.*

5. Slightly raise the AdBlue® pump nozzle and then slowly remove it.
6. Replace the AdBlue® tank filler cap. Turn it clockwise until you feel a strong resistance and it clicks.

Do not attempt to start the engine if you have filled the AdBlue® tank with incorrect fluid. Incorrect fluid use could cause damage not covered by the vehicle Warranty. Have your vehicle checked as soon as possible.

Filling the AdBlue® Tank Using a Container

WARNING: Do not allow diesel exhaust fluid (AdBlue) to come into contact with eyes, skin or clothing. Should the fluid come into contact with eyes, flush them with plenty of water and seek medical attention. Clean affected skin with soap and water. If swallowed, drink plenty of water and seek medical attention immediately.

WARNING: Refill the diesel exhaust fluid (AdBlue) tank in a well-ventilated area. When removing the tank cap or a container cap, ammonia vapor may escape. Ammonia vapor is an irritant to the eyes, skin and mucous membranes. Inhaling ammonia vapor can cause burning to the eyes, throat and nose resulting in watering eyes or severe coughing.

Use containers that have a seal on the spout.

Always follow the manufacturer's instructions.

1. Remove the fluid container cap.
2. Place the spout on to the container and tighten it until you feel a strong resistance.
3. Remove the AdBlue® tank filler cap.
4. Insert the spout into the AdBlue® tank filler pipe until the seal on the spout fully seats.
5. Pour the fluid into the tank.

Note: *The fluid stops flowing when the tank is full.*

6. Return the container to the vertical position slightly below the AdBlue® tank filler pipe.
7. Allow any fluid remaining in the spout to drain back into the container.
8. Remove the spout from the AdBlue® tank filler pipe.
9. Remove the spout from the AdBlue® container and replace the cap.
10. Replace the AdBlue® tank filler cap. Turn it clockwise until you feel a strong resistance and it clicks.

Do not attempt to start the engine if you have filled the AdBlue® tank with incorrect fluid. Incorrect fluid use could cause damage not covered by the vehicle Warranty. Have your vehicle checked as soon as possible.

Checking the AdBlue® Level

1. Using the information display controls on the steering wheel, select ***Settings***.
2. Select ***Vehicle maintenance***.
3. Select ***DEF gauge***.

Checking the AdBlue® Level Status

1. Using the information display controls on the steering wheel, select ***Settings***.
2. Select ***Vehicle maintenance***.
3. Select ***DEF level***.

Transit (TTS) Vehicles Built From: 27-01-2020 Vehicles Built Up To: 20-09-2020, CG3796en enGBR, Edition date: 201911, First-Printing

AdBlue® Consumption

AdBlue® consumption is directly related to fuel consumption and is governed by many factors, for example driving style, high speed driving, stop-start driving, air conditioning usage, add-on accessories, payload and towing. The AdBlue® consumption may vary between 1% and 5% of the fuel consumption.

AdBlue® consumption is specified for a vehicle variant and not for a single car.

Selective Catalytic Reductant System Warning Lamp



The warning lamp illuminates if the system detects the fluid level is low or if there is a system malfunction.

If the warning lamp illuminates, the information display messages give you an indication whether the concern is fluid related or if there is a selective catalytic reductant system malfunction. If the warning lamp illuminates when your vehicle is moving, and the fluid is at a sufficient level, this indicates a system malfunction. Have your vehicle checked as soon as possible.

Selective Catalytic Reductant System Information Messages

AdBlue® Level

Message	Action
AdBlue® low Range : XXXX km Refill soon AdBlue® low Range : XXXX mls Refill soon	Indicates the approximate distance remaining before the AdBlue® tank becomes empty. Refill the AdBlue® tank as soon as possible.
AdBlue® low No engine start in XXXX km AdBlue® low No engine start in XXXX mls	Indicates the approximate distance remaining before the AdBlue® tank becomes empty. The engine would not restart if you switch the ignition off. Refill the AdBlue® tank as soon as possible.
AdBlue® level empty. Refill to start engine	The AdBlue® tank is empty. The engine would not restart if you switch the ignition off. Refill the AdBlue® tank. The minimum AdBlue® refill quantity required to restart the engine is available in the information display. See **Information Displays** (page 89).

Note: *When filling the AdBlue® tank from empty, there may be a short period before the increased AdBlue® level is registered.*

Transit (TTS) Vehicles Built From: 27-01-2020 Vehicles Built Up To: 20-09-2020, CG3796en enGBR, Edition date: 201911, First-Printing

AdBlue® Malfunction

Message	Action
AdBlue® system malfunction Service required	The system has malfunctioned. Have your vehicle checked as soon as possible.
AdBlue® system No engine start in XXXX km AdBlue® system No engine start in XXXX mls	Indicates the approximate distance before a detected system fault would restrict the engine from starting. The engine would not restart if you switch the ignition off. Have your vehicle checked as soon as possible.
AdBlue® system Service required to start engine	The system has malfunctioned. Have your vehicle checked as soon as possible.

DIESEL PARTICULATE FILTER

WARNING: Do not park or idle your vehicle over dry leaves, dry grass or other combustible materials. The regeneration process creates very high exhaust gas temperatures and the exhaust will radiate a considerable amount of heat during and after regeneration and after you have switched the engine off. This is a potential fire hazard.

WARNING: The normal operating temperature of the exhaust system is very high. Never work around or attempt to repair any part of the exhaust system until it has cooled. Use special care when working around the diesel oxidation catalytic converter or the diesel particulate filter. The diesel oxidation catalytic converter and the diesel particulate filter heat up to very high temperatures after only a short period of engine operation and remain hot after you switch the engine off.

WARNING: Exhaust leaks may result in entry of harmful and potentially lethal fumes into the passenger compartment. If you smell exhaust fumes inside your vehicle, have your vehicle inspected immediately. Do not drive if you smell exhaust fumes.

Your vehicle has various emission control components and a diesel particulate filter that enables it to comply with applicable exhaust emission standards. It filters harmful diesel particulates, for example soot from the exhaust gas.

To avoid damaging the diesel particulate filter:

- Do not crank the engine for more than 10 seconds at a time.
- Do not push-start or tow-start your vehicle. Use booster cables.
- Do not switch the ignition off when your vehicle is moving.
- Do not ignore warning lamps or information messages regarding exhaust system cleaning and regeneration.

Note: *This could result in damage not covered by the vehicle Warranty.*

Transit (TTS) Vehicles Built From: 27-01-2020 Vehicles Built Up To: 20-09-2020, CG3796en enGBR, Edition date: 201911, First-Printing

On-Board Diagnostics System

Your vehicle has an on-board diagnostics system that monitors the emission control system. If any of the following warning lamps illuminate, this indicates that the on-board diagnostics system has detected an emission control system malfunction.


Engine coolant temperature warning lamp.

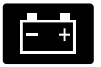
Ignition warning lamp.


Malfunction indicator lamp.


Water in fuel warning lamp.

If you continue to drive your vehicle when the warning lamp is illuminated, the engine could stop without warning. This could result in damage not covered by the vehicle Warranty. Have your vehicle checked as soon as possible.

Diesel Particulate Filter Automatic Regeneration

WARNING: Do not park or idle your vehicle over dry leaves, dry grass or other combustible materials. The regeneration process creates very high exhaust gas temperatures and the exhaust will radiate a considerable amount of heat during and after regeneration and after you have switched the engine off. This is a potential fire hazard.

WARNING: The normal operating temperature of the exhaust system is very high. Never work around or attempt to repair any part of the exhaust system until it has cooled. Use special care when working around the diesel oxidation catalytic converter or the diesel particulate filter. The diesel oxidation catalytic converter and the diesel particulate filter heat up to very high temperatures after only a short period of engine operation and remain hot after you switch the engine off.

The diesel particulate filter on your vehicle requires periodic regeneration to maintain correct operation. The emission control system automatically carries out this process. As soot gathers in the system it begins to restrict the filter. The soot that gathers inside the filter is cleaned in two different ways, passive regeneration and active regeneration. Both methods occur automatically and require no actions from the driver. During automatic regeneration, the system cleans the diesel particulate filter by oxidizing the soot. Cleaning happens during normal engine operating conditions at varying levels depending on driving conditions.

If the diesel particulate filter is near or at saturation, an information message appears in the information display. Drive your vehicle in a manner to allow effective diesel particulate filter cleaning.

Failure to carry out regeneration when required could result in a clogged diesel particulate filter. If the diesel particulate filter fills beyond the regeneration threshold, the system disables the ability to carry out regeneration. This could result in damage not covered by the vehicle Warranty.

Transit (TTS) Vehicles Built From: 27-01-2020 Vehicles Built Up To: 20-09-2020, CG3796en enGBR, Edition date: 201911, First-Printing

Where vehicle use meets any of the following conditions:

- Driving short distances.
- Prolonged engine idling.
- Frequently switching the engine on and off.
- High levels of acceleration and deceleration.

We recommend you assist the regeneration process by:

- Avoiding prolonged engine idling.
- Drive your vehicle in a manner to allow effective cleaning. Drive at a steady vehicle speed of 48 km/h (30 mph) or above for approximately 20 minutes.



If the warning lamp illuminates the diesel particulate filter could have become overloaded. Have your vehicle checked as soon as possible.

Automatic regeneration raises the exhaust temperature to eliminate the soot particles. During cleaning soot particles are converted to harmless gasses. Once cleaned the diesel particulate filter continues to trap harmful diesel particles.

If you are driving your vehicle in a manner that allows effective cleaning, a message may appear in the information display to indicate automatic regeneration is in progress.

If you are not driving your vehicle in a manner that allows effective cleaning, a message may appear in the information display to instruct you to drive in a manner that allows automatic regeneration.

The automatic regeneration process is most effective when you drive at a steady vehicle speed of 48 km/h (30 mph) or above for approximately 20 minutes. The frequency and duration of the regeneration process varies by how you drive your vehicle, the outside air temperature and altitude. Frequency varies between 160 km (100 mi) and 500 km (310 mi) and each regeneration process lasts between 10 and 20 minutes.

Note: *Changes in the engine or exhaust sound may be heard during the regeneration process.*

Note: *During regeneration at low speed or engine idle, you may smell a hot metallic odor and could notice a clicking metallic sound. This is due to the high temperatures reached during the regeneration process. This is normal.*

Diesel Particulate Filter Manual Regeneration (If Equipped)

WARNING: Do not park or idle your vehicle over dry leaves, dry grass or other combustible materials. The regeneration process creates very high exhaust gas temperatures and the exhaust will radiate a considerable amount of heat during and after regeneration and after you have switched the engine off. This is a potential fire hazard.

WARNING: The normal operating temperature of the exhaust system is very high. Never work around or attempt to repair any part of the exhaust system until it has cooled. Use special care when working around the diesel oxidation catalytic converter or the diesel

Transit (TTS) Vehicles Built From: 27-01-2020 Vehicles Built Up To: 20-09-2020, CG3796en enGBR, Edition date: 201911, First-Printing

particulate filter. The diesel oxidation catalytic converter and the diesel particulate filter heat up to very high temperatures after only a short period of engine operation and remain hot after you switch the engine off.

If the diesel particulate filter is near or at saturation, an information message appears in the information display advising you to initiate diesel particulate filter manual regeneration.

Before you start manual regeneration, do the following:

- Park your vehicle outside of any enclosed structure.
- Make sure the transmission is in park (P) or neutral (N).
- Make sure the parking brake is on.
- Park your vehicle a minimum of 3 m (10 ft) from any obstructions and materials that can easily combust or melt, for example, paper, leaves, fuels, plastics and other dry organic material.
- Make sure there is a minimum of 12 L (2.6 gal) of fuel in the fuel tank.
- Check the engine oil level.
- Check the engine coolant level.

Manual Regeneration

Where vehicle use has significant engine idle operation, frequent vehicle speed less than 40 km/h (25 mph), or driving short distances where the engine does not fully warm up, manual regeneration allows you to start diesel particulate filter cleaning when the engine is idling.

Use the manual regeneration feature when:

- You are not able to drive in a manner that allows effective automatic cleaning. The automatic regeneration process is most effective when you drive at a steady vehicle speed of 48 km/h (30 mph) or above for approximately 20 minutes. .
- You choose to manually start the regeneration process when the engine is idling.

Note: *Changes in the engine or exhaust sound may be heard during the regeneration process.*

Note: *During regeneration at low speed or engine idle, you may smell a hot metallic odor and could notice a clicking metallic sound. This is due to the high temperatures reached during the regeneration process. This is normal.*

Starting Manual Regeneration

You can only start manual regeneration with the engine running at normal operating temperature using the information display.

Note: *During the use of manual regeneration, you may observe a light amount of white smoke. This is normal.*

Note: *If you press any pedal during manual regeneration the engine may turn off. To protect the exhaust system you may not be able to restart the engine for 10 minutes.*

1. Using the information display controls on the steering wheel, select ***Settings***.
2. Select ***Vehicle maintenance***.
3. Select ***Exhaust filter***.
4. Press and hold the ***OK*** button until a confirmation message appears in the information display.

Transit (TTS) Vehicles Built From: 27-01-2020 Vehicles Built Up To: 20-09-2020, CG3796en enGBR, Edition date: 201911, First-Printing



If a warning illuminates you may not be able to start manual regeneration.

When you start manual regeneration the engine speed rises to approximately 2000–2500 rpm and the cooling fan speed increases. A change in engine noise due to the cooling fan and engine speed increase may be heard during the regeneration process.

Depending on the amount of soot collected by the diesel particulate filter, the regeneration process varies depending on the outside air temperature and altitude. Manual regeneration may last up to 40 minutes.

When manual regeneration is complete the cooling fan and engine speed return to normal idling. The exhaust system remains very hot for several minutes after regeneration is complete. Do not reposition the vehicle over dry leaves, dry grass or other combustible materials until the exhaust system has had sufficient time to cool.

Interrupting or Cancelling Manual Regeneration

You can interrupt or cancel manual regeneration by switching the engine off. It may be possible to interrupt or cancel manual regeneration by pressing any pedal.

Note: *To protect the exhaust system you may not be able to restart the engine for 10 minutes.*

Depending on the amount of time allowed for manual regeneration to operate, soot may not have had sufficient time to be eliminated. The exhaust system may still be very hot for several minutes after regeneration.

If you switch the engine off during manual regeneration, turbo charger flutter occurs. This is a consequence of switching a diesel engine off during turbo charger boost operation, which is normal.

Diesel Particulate Filter Information Messages

Message	Action
Exhaust filter at limit Drive to clean now	• Drive at a varied range of conditions, including highway conditions for 20 minutes or until the message disappears. • Avoid prolonged engine idling. • Select a suitable gear to maintain engine speed between 1500 and 4000 RPM.
Exhaust filter over limit Service now	• Drive at a moderate speed. • Avoid heavy acceleration and deceleration. • Have your vehicle checked as soon as possible.

Transit (TTS) Vehicles Built From: 27-01-2020 Vehicles Built Up To: 20-09-2020, CG3796en enGBR, Edition date: 201911, First-Printing

MANUAL TRANSMISSION

Do not rest your hand on the gearshift lever or use the gearshift lever to hang and support objects. This could cause damage to the transmission not covered by the vehicle Warranty.

Do not rest your foot on the clutch pedal or use the clutch pedal to keep your vehicle stationary when waiting on a hill. This could cause damage to the clutch not covered by the vehicle Warranty.

Failure to fully press the clutch pedal could cause increased shift efforts, prematurely wear transmission components or damage to the transmission.

If any gear is not fully engaged, fully press the clutch pedal and shift into neutral. Release the clutch pedal for a moment, fully press the clutch pedal again and shift into gear.

Shifting Into Reverse

Do not shift into reverse when your vehicle is moving. This could cause damage to the transmission not covered by the vehicle Warranty.

1. Fully press the brake pedal.
2. Fully press the clutch pedal and shift into neutral.

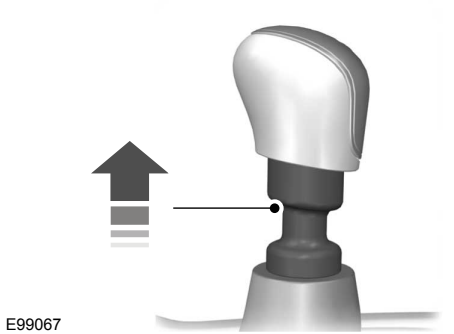

E99067

3. Raise the collar and shift into reverse.

Shift Indicator



It illuminates to advise you that shifting to a higher or lower gear may give better performance, fuel economy or lower emissions.

AUTOMATIC TRANSMISSION - 6-SPEED AUTOMATIC TRANSMISSION

WARNING: Do not apply the brake pedal and accelerator pedal simultaneously. Applying both pedals simultaneously for more than a few seconds will limit engine performance, which may result in difficulty maintaining speed in traffic and could lead to serious injury.

WARNING: When your vehicle is stationary, keep the brake pedal fully pressed when shifting gears. Failure to follow this instruction could result in personal injury, death or property damage.

WARNING: Apply the parking brake, shift into park (P), switch the ignition off and remove the key before you leave your vehicle. Failure to follow this instruction could result in personal injury or death.

Selector Lever Positions

The instrument cluster displays the current position.

Transit (TTS) Vehicles Built From: 27-01-2020 Vehicles Built Up To: 20-09-2020, CG3796en enGBR, Edition date: 201911, First-Printing

Park (P)

In park (P), power is not transmitted to the driven wheels and the transmission is locked. You can start the engine with the transmission in this position.

Shift into park (P) only when your vehicle is stationary.

Reverse (R)

Shift into reverse (R) only when your vehicle is stationary and the engine is at idle speed.

Neutral (N)

WARNING: In neutral (N) your vehicle has the ability to roll freely. If you intend to leave your vehicle, make sure you apply the parking brake.

In neutral (N), power is not transmitted to the driven wheels but the transmission is not locked. You can start the engine with the transmission in this position.

Drive (D)

Drive (D) is the normal position for driving.

Manual (M)

In manual (M), you can upshift or downshift using the buttons on the selector lever.

SelectShift™

About SelectShift™

Use this feature to upshift or downshift using the buttons on the selector lever.

Using SelectShift™

Shift into manual (M) to switch the feature on.

- Press the **+** button to upshift.
- Press the **–** button to downshift.

Shift into another gear to switch the feature off.

Brake Shift Interlock

About Brake Shift Interlock

Brake shift interlock prevents you from shifting out of park (P) when you have switched the ignition on and not pressed the brake pedal.

Shifting Out of Park (P)

WARNING: Do not drive your vehicle until you verify that the stoplamps are working.

WARNING: If the parking brake is fully released, but the brake warning lamp remains illuminated, the brakes may not be working properly. Have your vehicle checked as soon as possible.

Use the brake shift interlock lever to move the selector lever out of park (P) if you cannot start the engine.

In the event of an electrical malfunction, it is possible that a fuse has blown or the stoplamps are not working. See **Fuse Specification Chart** (page 234).

If the vehicle battery has no charge, jump start your vehicle. See **Jump Starting the Vehicle** (page 228).

WARNING: When doing this procedure, you need to take the transmission out of park (P) which means your vehicle can roll freely. To avoid unwanted vehicle movement, always fully apply the parking brake prior to doing this procedure. Use wheels chocks if appropriate.

Transit (TTS) Vehicles Built From: 27-01-2020 Vehicles Built Up To: 20-09-2020, CG3796en enGBR, Edition date: 201911, First-Printing

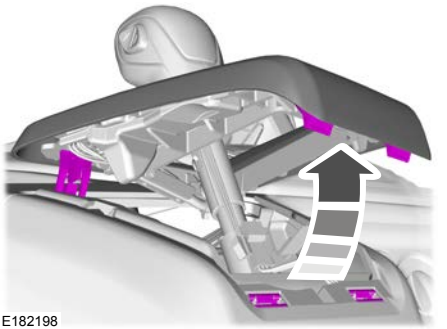
E182198

1. Using a flat-bladed screwdriver, remove the panel.

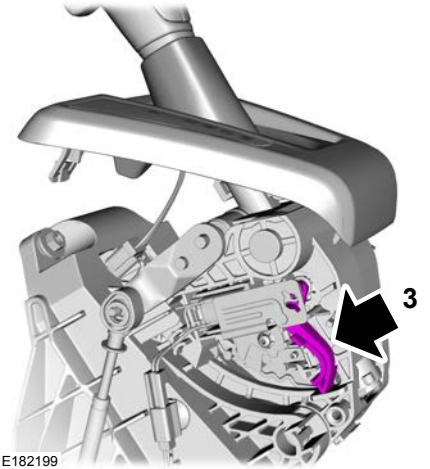

E182199

2. Locate the brake shift interlock lever.

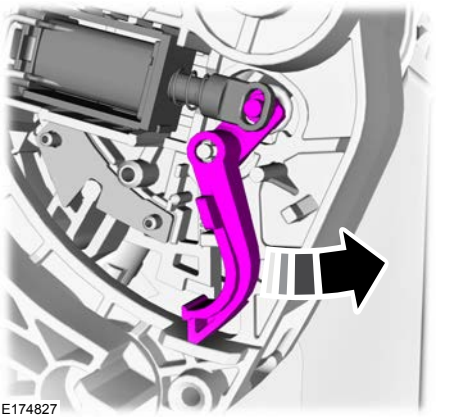
E174827

3. Push the brake shift interlock lever toward the rear of your vehicle and hold it there.
4. Move the selector lever from park (P) to neutral (N).
5. Install the panel.
6. Press the brake pedal, start the engine and release the parking brake.

Transmission Not in Park (P) Audible Warning

Sounds when you open the driver door and you have not moved the selector lever to park (P).

Transit (TTS) Vehicles Built From: 27-01-2020 Vehicles Built Up To: 20-09-2020, CG3796en enGBR, Edition date: 201911, First-Printing

Automatic Transmission Information Messages

Message	Description
Transmission malfunction Service now Transmission Service required	The system has detected a fault that requires service. Have your vehicle checked as soon as possible.
Transmission overtemperature Stop safely Transmission overheating Stop safely Transmission too hot Press brake	The transmission is overheating and needs to cool. Stop your vehicle as soon as it is safe to do so, leave the engine running and allow the transmission to cool. Wait until the message disappears.
Transmission limited function See manual	The transmission has limited functionality. The system has detected a fault that requires service. Have your vehicle checked as soon as possible.
Transmission warming up Please wait	Displays at low outside temperatures, if it takes a few seconds for the transmission to engage a gear. Fully press the brake pedal until the message disappears.
Transmission not in Park	Displays as a reminder to shift into park (P).

AUTOMATIC TRANSMISSION - 10-SPEED AUTOMATIC TRANSMISSION

WARNING: Do not apply the brake pedal and accelerator pedal simultaneously. Applying both pedals simultaneously for more than a few seconds will limit engine performance, which may result in difficulty maintaining speed in traffic and could lead to serious injury.

WARNING: When your vehicle is stationary, keep the brake pedal fully pressed when shifting gears. Failure to follow this instruction could result in personal injury, death or property damage.

WARNING: Apply the parking brake, shift into park (P), switch the ignition off and remove the key before you leave your vehicle. Failure to follow this instruction could result in personal injury or death.

Selector Lever Positions

The instrument cluster displays the current position.

Transit (TTS) Vehicles Built From: 27-01-2020 Vehicles Built Up To: 20-09-2020, CG3796en enGBR, Edition date: 201911, First-Printing

Park (P)

In park (P), power is not transmitted to the driven wheels and the transmission is locked. You can start the engine with the transmission in this position.

Shift into park (P) only when your vehicle is stationary.

Reverse (R)

Shift into reverse (R) only when your vehicle is stationary and the engine is at idle speed.

Neutral (N)

WARNING: In neutral (N) your vehicle has the ability to roll freely. If you intend to leave your vehicle, make sure you apply the parking brake.

In neutral (N), power is not transmitted to the driven wheels but the transmission is not locked. You can start the engine with the transmission in this position.

Drive (D)

Drive (D) is the normal position for driving.

Manual (M)

In manual (M), you can upshift or downshift using the buttons on the selector lever.

SelectShift™

Use this feature to upshift or downshift using the buttons on the selector lever.

Shift into manual (M) to switch the feature on.

- Press the + button to upshift.
- Press the – button to downshift.

Shift into another gear to switch the feature off.

Progressive Range Selection

Use this feature to lock out gears using the buttons on the selector lever. This may provide you with an improved driving experience, for example, on slippery roads or steep slopes.

With the transmission in drive (D), press the – button to switch the feature on.

Note: *The instrument cluster displays the available and selected gears.*

Press the – button again to lock out gears beginning with the highest gear. For example, press the – button twice to lock out 10th and 9th gears.

Note: *The instrument cluster only displays the available gears and the transmission automatically shifts between the available gears.*

Press the + button to unlock gears to allow the transmission to shift to higher gears.

Note: *The transmission automatically shifts within the gear range you select.*

Brake Shift Interlock

WARNING: Do not drive your vehicle until you verify that the stoplamps are working.

WARNING: When doing this procedure, you need to take the transmission out of park (P) which means your vehicle can roll freely. To avoid unwanted vehicle movement, always fully apply the parking brake prior to doing this procedure. Use wheels chocks if appropriate.

WARNING: If the parking brake is fully released, but the brake warning lamp remains illuminated, the brakes may not be working properly. Have your vehicle checked as soon as possible.

Transit (TTS) Vehicles Built From: 27-01-2020 Vehicles Built Up To: 20-09-2020, CG3796en enGBR, Edition date: 201911, First-Printing

Brake shift interlock prevents you from shifting out of park (P) when you have switched the ignition on and not pressed the brake pedal.

Use the brake shift interlock lever to move the selector lever out of park (P) if you cannot start the engine.

In the event of an electrical malfunction, it is possible that a fuse has blown or the stoplamps are not working. See **Fuse Specification Chart** (page 234).

If the vehicle battery has no charge, jump start your vehicle. See **Jump Starting the Vehicle** (page 228).

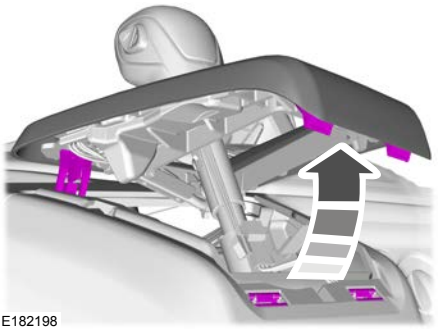

E182198

1. Using a flat-bladed screwdriver, remove the panel.

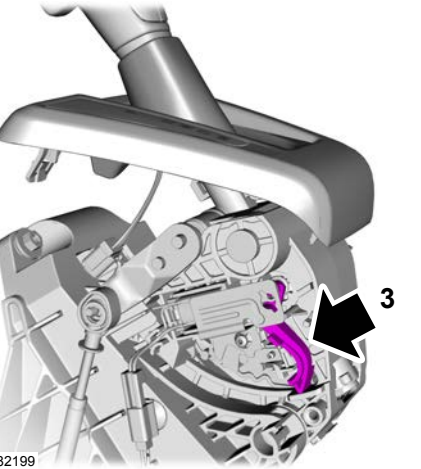

E182199

2. Locate the brake shift interlock lever.

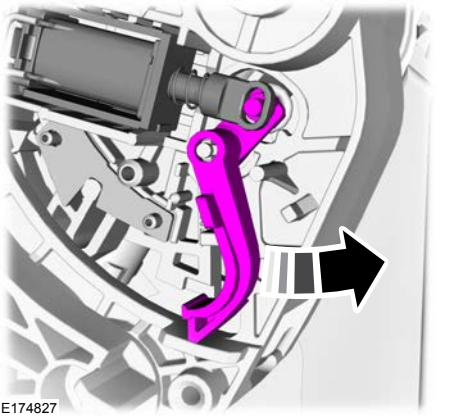

E174827

3. Push the brake shift interlock lever toward the rear of your vehicle and hold it there.
4. Move the selector lever from park (P) to neutral (N).
5. Install the panel.

Transit (TTS) Vehicles Built From: 27-01-2020 Vehicles Built Up To: 20-09-2020, CG3796en enGBR, Edition date: 201911, First-Printing

6. Press the brake pedal, start the engine and release the parking brake.

Transmission Not in Park (P) Audible Warning

Sounds when you open the driver door and you have not moved the selector lever to park (P).

Automatic Transmission Information Messages

Message	Description
Transmission Service required	The system has detected a fault that requires service. Have your vehicle checked as soon as possible.
Transmission not in Park	Displays as a reminder to shift into park (P).
Press brake to unlock selector lever	Press the brake pedal to unlock the transmission.

Transit (TTS) Vehicles Built From: 27-01-2020 Vehicles Built Up To: 20-09-2020, CG3796en enGBR, Edition date: 201911, First-Printing

USING ALL-WHEEL DRIVE

All-Wheel Drive Automatic Mode

This mode is suitable for most conditions.

Note: *This is the default mode each time you switch the ignition on.*

All-Wheel Drive Lock Mode

Only use this mode in certain conditions, for example deep sand or snow.

Switching All-Wheel Drive Lock Mode On and Off

The button is on the instrument panel.



Repeatedly press the button to scroll through the available drive modes. Release the button to confirm your selected drive mode.

Mud/Ruts



Select this mode to switch the all-wheel drive lock mode on.

Note: *The stability control warning lamp illuminates. The anti-lock braking system and traction control continue to fully operate.*

Normal



Select this mode to switch the all-wheel drive lock mode off and to return to the all-wheel drive automatic mode.

All-Wheel Drive Information Messages

Message	Description
AWD malfunction Service required	The system has malfunctioned. Have your vehicle checked as soon as possible.

Transit (TTS) Vehicles Built From: 27-01-2020 Vehicles Built Up To: 20-09-2020, CG3796en enGBR, Edition date: 201911, First-Printing

GENERAL INFORMATION

Note: *Occasional brake noise is normal. If a metal-to-metal, continuous grinding or continuous squeal sound is present, the brake linings may be worn-out. If your vehicle has continuous vibration or shudder in the steering wheel while braking, have your vehicle checked by an authorized dealer.*

Note: *Brake dust may accumulate on the wheels, even under normal driving conditions. Some dust is inevitable as the brakes wear. See* ***Cleaning the Wheels*** *(page 272).*

Note: *Depending on applicable laws and regulations in the country for which your vehicle was originally built, the brake lamps may flash during heavy braking. Following this the hazard warning flashers may also flash when your vehicle comes to a stop.*

Wet brakes result in reduced braking efficiency. Gently press the brake pedal a few times when driving from a car wash or standing water to dry the brakes.

Brake Over Accelerator

In the event the accelerator pedal becomes stuck or entrapped, apply steady and firm pressure to the brake pedal to slow the vehicle and reduce engine power. If you experience this condition, apply the brakes and bring your vehicle to a safe stop. Shift the transmission to park (P) (automatic transmission) or to a low gear (manual transmission), switch the engine off and apply the parking brake. Inspect the accelerator pedal and the area around it for any items or debris that may be obstructing its movement. If none are found and the condition persists, have your vehicle towed to the dealer for service.

Brake Assist

Brake assist detects when you brake heavily by measuring the rate at which you press the brake pedal. It provides maximum braking efficiency as long as you press the pedal. Brake assist can reduce stopping distances in critical situations.

Anti-lock Brake System

This system helps you maintain steering control and vehicle stability during emergency stops by keeping the brakes from locking.

HINTS ON DRIVING WITH ANTI-LOCK BRAKES

The anti-lock braking system does not eliminate the risks when:

- You drive too closely to the vehicle in front of you.
- Your vehicle is hydroplaning.
- You take corners too fast.
- The road surface is poor.

Note: *If the system activates, the brake pedal may pulse and may travel further. Maintain pressure on the brake pedal. You may also hear a noise from the system. This is normal.*

HILL START ASSIST

WARNING: The system does not replace the parking brake. When you leave your vehicle, always apply the parking brake.

Transit (TTS) Vehicles Built From: 27-01-2020 Vehicles Built Up To: 20-09-2020, CG3796en enGBR, Edition date: 201911, First-Printing

WARNING: You must remain in your vehicle when the system turns on. At all times, you are responsible for controlling your vehicle, supervising the system and intervening, if required. Failure to take care may result in the loss of control of your vehicle, serious personal injury or death.

WARNING: The system turns off if there is a malfunction or if you excessively rev the engine.

The system makes it easier for you to pull away when your vehicle is on a slope without using the parking brake.

When the system activates, your vehicle remains stationary for a few seconds after you release the brake pedal. This gives you time to move your foot from the brake pedal to the accelerator pedal. The brakes release when the engine has developed sufficient torque to prevent your vehicle from rolling down the slope.

Using Hill Start Assist

1. Bring your vehicle to a complete standstill. Keep the brake pedal pressed.
2. Select a gear.

Note: *The system activates if the sensors detect that your vehicle is on a slope.*

3. Pull away in the normal manner.

Note: *When you remove your foot from the brake pedal, your vehicle remains on the slope without rolling away for a few seconds. This hold time increases if you are in the process of driving off.*

Switching Hill Start Assist On or Off

Vehicles with Manual Transmission

To switch hill start assist on or off, use the information display controls on the steering wheel to select the following:

Menu Item	Action
Driver assist.	Press the menu button.
Hill Start Assist	Press the ***OK*** button.

The system remembers the last setting when you start your vehicle.

Note: *There is no indicator to indicate whether the system is on or off.*

Vehicles with Automatic Transmission

The system turns on when you switch the ignition on and you cannot switch the system off.

Transit (TTS) Vehicles Built From: 27-01-2020 Vehicles Built Up To: 20-09-2020, CG3796en enGBR, Edition date: 201911, First-Printing

Hill Start Assist Information Messages

Message	Action
Hill start assist not available	Displays when the system is not available. Have your vehicle checked as soon as possible.

Transit (TTS) Vehicles Built From: 27-01-2020 Vehicles Built Up To: 20-09-2020, CG3796en enGBR, Edition date: 201911, First-Printing

APPLYING THE PARKING BRAKE

WARNING: Always fully apply the parking brake and make sure you shift into park (P). Failure to follow this instruction could result in personal injury or death.

1. Firmly press the brake pedal.
2. Pull the parking lever upward to its fullest extent.

Note: *Do not press the release button while pulling the parking brake lever upward.*

Note: *If you park your vehicle on a hill and facing uphill, shift into park (P) and turn the steering wheel away from the curb.*

Note: *If you park your vehicle on a hill and facing downhill, shift into park (P) and turn the steering wheel toward the curb.*

RELEASING THE PARKING BRAKE

1. Firmly press the brake pedal.
2. Slightly pull the parking brake lever upward.
3. Press the release button and push the parking brake lever downward.

PARKING BRAKE AUDIBLE WARNING

Sounds when the parking brake is on and your vehicle is moving.

If the warning tone continues after you have released the parking brake, this indicates a malfunction. Have your vehicle checked as soon as possible.

PARKING BRAKE – TROUBLESHOOTING

Parking Brake – Warning Lamps

WARNING: If you drive extended distances with the parking brake applied, you could cause damage to the brake system.



It illuminates when you engage the parking brake and the ignition is on.

If it illuminates when your vehicle is moving, make sure the parking brake is disengaged. If the parking brake is disengaged, this indicates low brake fluid level or a brake system fault. Have your vehicle checked as soon as possible.

Parking Brake – Information Messages

Message	Description
Park brake applied	You have not released the parking brake and your vehicle reaches 5 km/h (3 mph). If the message continues to appear after you have released the parking brake, have your vehicle checked as soon as possible.

Transit (TTS) Vehicles Built From: 27-01-2020 Vehicles Built Up To: 20-09-2020, CG3796en enGBR, Edition date: 201911, First-Printing

APPLYING THE PARKING BRAKE

WARNING: Always fully apply the parking brake and make sure you shift into park (P). Failure to follow this instruction could result in personal injury or death.

1. Firmly press the brake pedal.
2. Pull the parking lever upward to its fullest extent.

Note: *Do not press the release button while pulling the parking brake lever upward.*

Note: *When applied, the parking brake lever will return to the completely down position and a warning lamp will illuminate.*

Note: *If you park your vehicle on a hill and facing uphill, shift into park (P) and turn the steering wheel away from the curb.*

Note: *If you park your vehicle on a hill and facing downhill, shift into park (P) and turn the steering wheel toward the curb.*

RELEASING THE PARKING BRAKE

1. Firmly press the brake pedal.
2. Pull the parking brake lever upward to its fullest extent.
3. Press the release button and push the parking brake lever downward.

PARKING BRAKE AUDIBLE WARNING

Sounds when the parking brake is on and your vehicle is moving.

If the warning tone continues after you have released the parking brake, this indicates a malfunction. Have your vehicle checked as soon as possible.

PARKING BRAKE – TROUBLESHOOTING

Parking Brake – Warning Lamps

WARNING: If you drive extended distances with the parking brake applied, you could cause damage to the brake system.



It illuminates when you engage the parking brake and the ignition is on.

If it illuminates when your vehicle is moving, make sure the parking brake is disengaged. If the parking brake is disengaged, this indicates low brake fluid level or a brake system fault. Have your vehicle checked as soon as possible.

Parking Brake – Information Messages

Message	Description
Park brake applied	You have not released the parking brake and your vehicle reaches 5 km/h (3 mph). If the message continues to appear after you have released the parking brake, have your vehicle checked as soon as possible.

Transit (TTS) Vehicles Built From: 27-01-2020 Vehicles Built Up To: 20-09-2020, CG3796en enGBR, Edition date: 201911, First-Printing

APPLYING THE PARKING BRAKE

WARNING: Always fully apply the parking brake. Failure to follow this instruction could result in personal injury or death.

1. Firmly press the brake pedal.
2. Pull the parking lever upward to its fullest extent.

Note: *Do not press the release button while pulling the parking brake lever upward.*

Note: *If you park your vehicle on a hill and facing uphill, select first gear and turn the steering wheel away from the curb.*

Note: *If you park your vehicle on a hill and facing downhill, select reverse gear and turn the steering wheel toward the curb.*

RELEASING THE PARKING BRAKE

1. Firmly press the brake pedal.
2. Slightly pull the parking brake lever upward.
3. Press the release button and push the parking brake lever downward.

PARKING BRAKE AUDIBLE WARNING

Sounds when the parking brake is on and your vehicle is moving.

If the warning tone continues after you have released the parking brake, this indicates a malfunction. Have your vehicle checked as soon as possible.

PARKING BRAKE – TROUBLESHOOTING

Parking Brake – Warning Lamps

WARNING: If you drive extended distances with the parking brake applied, you could cause damage to the brake system.



It illuminates when you engage the parking brake and the ignition is on.

If it illuminates when your vehicle is moving, make sure the parking brake is disengaged. If the parking brake is disengaged, this indicates low brake fluid level or a brake system fault. Have your vehicle checked as soon as possible.

Parking Brake – Information Messages

Message	Description
Park brake applied	You have not released the parking brake and your vehicle reaches 5 km/h (3 mph). If the message continues to appear after you have released the parking brake, have your vehicle checked as soon as possible.

Transit (TTS) Vehicles Built From: 27-01-2020 Vehicles Built Up To: 20-09-2020, CG3796en enGBR, Edition date: 201911, First-Printing

APPLYING THE PARKING BRAKE

WARNING: Always fully apply the parking brake. Failure to follow this instruction could result in personal injury or death.

1. Firmly press the brake pedal.
2. Pull the parking lever upward to its fullest extent.

Note: *Do not press the release button while pulling the parking brake lever upward.*

Note: *When applied, the parking brake lever will return to the completely down position and a warning lamp will illuminate.*

Note: *If you park your vehicle on a hill and facing uphill select first gear and turn the steering wheel away from the curb.*

Note: *If you park your vehicle on a hill and facing downhill select reverse gear and turn the steering wheel toward the curb.*

RELEASING THE PARKING BRAKE

1. Firmly press the brake pedal.
2. Pull the parking brake lever upward to its fullest extent.
3. Press the release button and push the parking brake lever downward.

PARKING BRAKE AUDIBLE WARNING

Sounds when the parking brake is on and your vehicle is moving.

If the warning tone continues after you have released the parking brake, this indicates a malfunction. Have your vehicle checked as soon as possible.

PARKING BRAKE – TROUBLESHOOTING

Parking Brake – Warning Lamps

WARNING: If you drive extended distances with the parking brake applied, you could cause damage to the brake system.



It illuminates when you engage the parking brake and the ignition is on.

If it illuminates when your vehicle is moving, make sure the parking brake is disengaged. If the parking brake is disengaged, this indicates low brake fluid level or a brake system fault. Have your vehicle checked as soon as possible.

Parking Brake – Information Messages

Message	Description
Park brake applied	You have not released the parking brake and your vehicle reaches 5 km/h (3 mph). If the message continues to appear after you have released the parking brake, have your vehicle checked as soon as possible.

Transit (TTS) Vehicles Built From: 27-01-2020 Vehicles Built Up To: 20-09-2020, CG3796en enGBR, Edition date: 201911, First-Printing

PRINCIPLE OF OPERATION

The traction control system helps avoid drive wheel spin and loss of traction.

If your vehicle begins to slide, the system applies the brakes to individual wheels and, when needed, reduces engine power at the same time. If the wheels spin when accelerating on slippery or loose surfaces, the system reduces engine power in order to increase traction.

USING TRACTION CONTROL

WARNING: The stability and traction control light illuminates steadily if the system detects a failure. Make sure you did not manually disable the traction control system using the information display controls or the switch. If the stability control and traction control light is still illuminating steadily, have the system serviced by an authorized dealer immediately. Operating your vehicle with the traction control disabled could lead to an increased risk of loss of vehicle control, vehicle rollover, personal injury and death.

The system automatically turns on each time you switch the ignition on.

If your vehicle is stuck in mud or snow, switching traction control off may be beneficial as this allows the wheels to spin.

Note: *When you switch traction control off, stability control remains fully active.*

Switching the System Off or On

When you switch the system off or on, a message appears in the information display showing system status.



Press the traction control button on the instrument panel to switch the system off or on.

System Indicator Lights and Messages



The stability and traction control light:

- Temporarily illuminates on engine start-up.
- Flashes when a driving condition activates either of the systems.
- Illuminates if a problem occurs in either of the systems.



The stability and traction control off light temporarily illuminates on engine start-up and stays on when you switch the traction control system off.

Transit (TTS) Vehicles Built From: 27-01-2020 Vehicles Built Up To: 20-09-2020, CG3796en enGBR, Edition date: 201911, First-Printing

PRINCIPLE OF OPERATION

Electronic Stability Control

WARNING: The system is designed to aid the driver. It is not intended to replace your attention and judgment. You are still responsible to drive with due care and attention.

The system supports stability when your vehicle starts to slide away from your intended path. The system does this by braking individual wheels and reducing engine torque.

The system also provides an enhanced traction control function by reducing engine torque if the wheels spin when you accelerate. This helps to pull away on slippery roads or loose surfaces, and improves comfort by limiting wheel spin in hairpin bends.

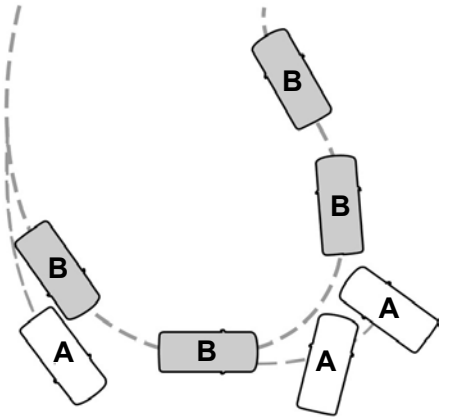

E72903

A Without ESC.
B With ESC.

Stability Control Warning Lamp



Flashes during operation.

USING STABILITY CONTROL

Note: *The system automatically turns on each time you switch the ignition on.*

You can switch the traction control system off and on. See **Using Stability Control** (page 165).

Transit (TTS) Vehicles Built From: 27-01-2020 Vehicles Built Up To: 20-09-2020, CG3796en enGBR, Edition date: 201911, First-Printing

PRINCIPLE OF OPERATION

WARNING: The system may not detect objects with surfaces that absorb reflection. Always drive with due care and attention. Failure to take care may result in a crash.

WARNING: To help avoid personal injury, always use caution when in reverse (R) and when using the sensing system.

WARNING: Traffic control systems, inclement weather, air brakes, external motors and fans may affect the correct operation of the sensing system.This may cause reduced performance or false alerts.

WARNING: The system may not detect small or moving objects, particularly those close to the ground.

Note: *Some accessories such as large trailer hitches, bike or surfboard racks can cause reduced performance or false alerts.*

Note: *Keep the sensors free from snow, ice and large accumulations of dirt. Blocked sensors may affect system accuracy. Do not clean the sensors with sharp objects.*

Note: *If your vehicle sustains damage leaving the sensors misaligned, this will cause inaccurate measurements or false alerts.*

Note: *The sensing system cannot be turned off when a MyKey is present. See* ***Principle of Operation*** *(page 43).*

We recommend that you take some time to get to know the system and its limitations by reading this section.

The sensing system warns the driver of obstacles within a certain range of your vehicle. The system automatically turns on each time you switch the ignition on.



You can turn the system on or off by pressing the parking aid button. If your vehicle does not have a parking aid button, the system can be switched off through the information display menu or from the pop-up message that appears once you shift the transmission into reverse (R). See **General Information** (page 89).

If a fault is present in the system, a warning message appears in the information display and does not allow you to switch the system on.

REAR PARKING AID

WARNING: The system may not detect objects with surfaces that absorb reflection. Always drive with due care and attention. Failure to take care may result in a crash.

WARNING: The system may not detect small or moving objects, particularly those close to the ground.

WARNING: To help avoid personal injury, always use caution when in reverse (R) and when using the sensing system.

WARNING: The parking aid system can only assist you to detect objects when your vehicle is moving at parking speeds. To help avoid personal injury you must take care when using the parking aid system.

If the system malfunctions, a message appears in the information display.

Transit (TTS) Vehicles Built From: 27-01-2020 Vehicles Built Up To: 20-09-2020, CG3796en enGBR, Edition date: 201911, First-Printing

Note: *Keep the sensors free from snow, ice and large accumulations of dirt.*

Note: *Do not cover up the sensors.*

Note: *Do not clean the sensors with sharp objects.*

Note: *If your vehicle sustains damage leaving the sensors misaligned, this may cause inaccurate measurements or false alerts.*

Note: *Some add-on accessories, for example large trailer hitches or bike or surfboard racks can cause reduced performance or false alerts.*

The sensors are active when the transmission is in reverse (R) and the vehicle speed is less than 5 km/h (3 mph). When the parking aid system sounds a tone, the audio system may reduce the set volume.

A warning tone sounds when an object approaches your vehicle. As your vehicle moves closer to an object, the rate of the tone increases. The warning tone continuously sounds when an object is 30 cm (12 in) or less from the center of the rear bumper.

Note: *There is a decreased coverage area at the outer corners.*



E130178

Sensor coverage area is up to 180 cm (70 in) from the rear bumper.

The system detects large objects when you shift into reverse (R) and any of the following occur:

- Your vehicle is moving backward at low speed.
- Your vehicle is stationary but an object is approaching the rear of your vehicle at low speed.
- Your vehicle is moving backward at low speed and an object is moving toward your vehicle, for example another vehicle at low speed.

If your vehicle remains stationary for two seconds the audible warning turns off. If your vehicle moves backward the tone sounds again.

Note: *If the detected object is 30 cm (12 in) or less from the rear bumper, the audible warning does not turn off.*

Object Distance Indicator (If Equipped)

When you shift into reverse (R), the system provides object distance indication through the information display.

- As the distance to the object decreases, the indicator blocks illuminate and move toward the vehicle icon.
- If there is no object detected, the distance indicator blocks are gray.

Transit (TTS) Vehicles Built From: 27-01-2020 Vehicles Built Up To: 20-09-2020, CG3796en enGBR, Edition date: 201911, First-Printing

Rear Parking Aid Information Messages

Message	Description
Park Pilot malfunction	The system has malfunctioned. Have your vehicle checked as soon as possible.
Check Park Pilot	The system has malfunctioned. Have your vehicle checked as soon as possible.
Check rear Park Pilot	The system has malfunctioned. Have your vehicle checked as soon as possible.
Rear Park Pilot not available Sensor blocked See manual	A sensor is blocked or the system has malfunctioned. Clean the bumper or remove any obstruction. If the message continues to appear, have your vehicle checked as soon as possible.

FRONT PARKING AID

WARNING: The system may not detect objects with surfaces that absorb reflection. Always drive with due care and attention. Failure to take care may result in a crash.

WARNING: The system may not detect small or moving objects, particularly those close to the ground.

WARNING: The parking aid system can only assist you to detect objects when your vehicle is moving at parking speeds. To help avoid personal injury you must take care when using the parking aid system.

The sensors are on the front bumper.

Note: *Keep the sensors free from snow, ice and large accumulations of dirt.*

Note: *Do not cover up the sensors.*

Note: *Do not clean the sensors with sharp objects.*

Note: *If your vehicle sustains damage leaving the sensors misaligned, this may cause inaccurate measurements or false alerts.*

The sensors are active when the transmission is in any position other than park (P). When the parking aid system sounds a tone, the audio system may reduce the set volume.

A warning tone sounds when an object approaches your vehicle. As your vehicle moves closer to an object, the rate of the tone increases. The warning tone continuously sounds when an object is 30 cm (12 in) or less from the front bumper.

The system turns off when the vehicle speed reaches 8 km/h (5 mph).

Transit (TTS) Vehicles Built From: 27-01-2020 Vehicles Built Up To: 20-09-2020, CG3796en enGBR, Edition date: 201911, First-Printing



E187330

Sensor coverage area is up to 70 cm (28 in) from the center of the bumper.

If the transmission is in reverse (R), the system detects objects when your vehicle is moving at low speed or an object is moving toward your vehicle, for example another vehicle at low speed. When you stop your vehicle, the audible warning turns off after two seconds.

If the transmission is in any forward gear, the system provides audible warnings when your vehicle is moving and an object is within the detection area. When you stop your vehicle, the audible warning turns off after two seconds and the visual warning turns off after four seconds.

Press the parking aid button to switch the system off.

If the system malfunctions, a message appears in the information display.

Object Distance Indicator (If Equipped)

The system provides object distance indication through the information display.

- As the distance to the object decreases, the indicator blocks illuminate and move toward the vehicle icon.
- If there is no object detected, the distance indicator blocks are gray.

When you shift into reverse (R), the system provides audio warnings and visual indication when your vehicle is moving and the detected object is moving toward your vehicle. When you stop your vehicle, the audio warnings stop after two seconds. Visual indication remains on when the transmission is in reverse (R).

When you shift into any forward gear, the system provides audio warnings and visual indication when your vehicle is moving at a speed of approximately 8 km/h (5 mph) or below and the system detects an object within the detection zone. When you stop your vehicle, the audio warnings stop after two seconds and visual indication stops after four seconds.

Note: *If the detected object is 30 cm (12 in) or less from your vehicle, visual indication remains on.*

When you shift into neutral (N), the system only provides visual indication if your vehicle is moving at a speed of approximately 8 km/h (5 mph) or below, for example, your vehicle is moving on a slope, and the system detects an object moving toward your vehicle. When you stop your vehicle, visual indication stops after four seconds.

Transit (TTS) Vehicles Built From: 27-01-2020 Vehicles Built Up To: 20-09-2020, CG3796en enGBR, Edition date: 201911, First-Printing

Front Parking Aid Information Messages

Message	Description
Park Pilot malfunction	The system has malfunctioned. Have your vehicle checked as soon as possible.
Check Park Pilot	The system has malfunctioned. Have your vehicle checked as soon as possible.
Check front Park Pilot	The system has malfunctioned. Have your vehicle checked as soon as possible.
Front Park Pilot not available Sensor blocked See manual	A sensor is blocked or the system has malfunctioned. Clean the bumper or remove any obstruction. If the message continues to appear, have your vehicle checked as soon as possible.

SIDE SENSING SYSTEM

WARNING: The system may not detect objects with surfaces that absorb reflection. Always drive with due care and attention. Failure to take care may result in a crash.

WARNING: The system may not detect small or moving objects, particularly those close to the ground.

WARNING: To help avoid personal injury, always use caution when in reverse (R) and when using the sensing system.

WARNING: The parking aid system can only assist you to detect objects when your vehicle is moving at parking speeds. To help avoid personal injury you must take care when using the parking aid system.

Note: *Keep the sensors free from snow, ice and large accumulations of dirt.*

Note: *Do not cover up the sensors.*

Note: *Do not clean the sensors with sharp objects.*

Note: *If your vehicle sustains damage leaving the sensors misaligned, this may cause inaccurate measurements or false alerts.*

Note: *If you switch traction control off, the side sensing system also turns off.*

Note: *Some accessories, for example large trailer hitches or bike or surfboard racks can cause reduced performance or false alerts.*

Note: *The system does not detect an object that is moving toward the side of your vehicle, for example another vehicle moving at low speed, if it does not pass a front or rear sensor.*

The system uses the front and rear outermost parking aid sensors to detect objects that are near to the sides of your vehicle. The system displays them on a virtual map in the information display as your vehicle moves past them.

The sensors are on the front and rear bumpers.

Transit (TTS) Vehicles Built From: 27-01-2020 Vehicles Built Up To: 20-09-2020, CG3796en enGBR, Edition date: 201911, First-Printing

The system may not function if:

- You switch the ignition on, off and back on within a few seconds.
- Your vehicle remains stationary for over two minutes.
- The anti-lock brake system activates.
- The traction control system activates.

To reinitialize the system, you may have to drive your vehicle approximately 3 m (10 ft).



E190458

The sensor coverage area is up to 60 cm (24 in) from the side of your vehicle.

When the system detects an object within the coverage area and the driving path of your vehicle, an audible warning sounds. As the object moves closer to your vehicle, the rate of the tone increases.

Object Distance Indicator (If Equipped)



E190459

The system provides object distance indication through the information display.

- As the distance to the object decreases, the indicator blocks illuminate and move toward the vehicle icon.
- If there is no object detected, the distance indicator blocks are gray.

When you shift into reverse (R), the system provides audible warnings and visual indication when detected objects are within 60 cm (24 in) and are inside the driving path of your vehicle. When you stop your vehicle, the audible warnings turn off after two seconds.

Transit (TTS) Vehicles Built From: 27-01-2020 Vehicles Built Up To: 20-09-2020, CG3796en enGBR, Edition date: 201911, First-Printing

When you shift into any forward gear, the system provides audible warnings and visual indication when your vehicle is moving at a speed of approximately 8 km/h (5 mph) or below and the system detects an object within the detection zone. When you stop your vehicle, the audible warnings turn off after two seconds and visual indication turns off after four seconds.

When you shift into neutral (N), the system only provides visual indication if your vehicle is moving at a speed of approximately 8 km/h (5 mph) or below. For example, your vehicle is moving on a slope, and the system detects an object moving toward your vehicle. When you stop your vehicle, visual indication turns off after four seconds.

If the system is not available, the side distance indicator blocks do not display.

ACTIVE PARK ASSIST

The system assists parking into and out of parking spaces. Sensors are used to detect parking spaces. The system then steers as required to maneuver into or out of a parking space. You control the accelerator, brakes and changing gears.

Using Active Park Assist

WARNING: You must remain in your vehicle when the system turns on. At all times, you are responsible for controlling your vehicle, supervising the system and intervening, if required. Failure to take care may result in the loss of control of your vehicle, serious personal injury or death.

WARNING: The sensors may not detect objects in heavy rain or other conditions that cause interference.

WARNING: You are responsible for controlling your vehicle at all times. The system is designed to be an aid and does not relieve you of your responsibility to drive with due care and attention. Failure to follow this instruction could result in the loss of control of your vehicle, personal injury or death.



The active park assist button is next to the gearshift lever.

Driving into a Parking Space

1. Press the active park assist button.

Note: *The system searches for parallel parking spaces on the passenger side. Press the active park assist button again to make the system search for perpendicular spaces.*

2. Use the direction indicator lever to search for a parking space on the driver or passenger side of your vehicle.
3. Drive your vehicle approximately 1 m (3 ft) away from and parallel to the other parked vehicles when searching for a parking space.

Note: *A tone sounds and a message appears in the information display when active park assist finds a suitable parking space.*

4. Bring your vehicle to a complete standstill.
5. Release the steering wheel and shift into reverse (R).
6. Drive backward and your vehicle steers itself into the parking space.
7. Follow the instructions on the information display.

Note: *When parking is complete, a tone sounds and an information message appears.*

Transit (TTS) Vehicles Built From: 27-01-2020 Vehicles Built Up To: 20-09-2020, CG3796en enGBR, Edition date: 201911, First-Printing

Leaving a Parking Space

The system assists leaving only parallel parking spaces.

1. Press the active park assist button.
2. Use the direction indicator lever to choose the direction to leave.
3. Release the steering wheel and shift into reverse (R).
4. Follow the instructions on the information display.

Note: *After the system drives your vehicle to a position where you can exit the parking space in a forward movement, a message appears instructing you to take full control of your vehicle.*

Canceling Active Park Assist

To cancel parking assistance at any time, press the active park assist button or turn the steering wheel.

Note: *It also cancels when your vehicle exceeds 9 km/h (6 mph).*

Brake System Intervention

When active park assist is controlling the steering, it may under certain conditions apply the brakes to slow or stop your vehicle.

Note: *This could cause the parking assistance to cancel.*

Active Park Assist Troubleshooting

Symptom	Possible Cause
The system does not search for a parking space.	You may have switched traction control off.
	The transmission is in reverse (R). Your vehicle must be moving forward to be able to detect a parking space.
The system does not offer a parking space.	The sensors may be blocked. For example, snow, ice or large accumulations of dirt. Blocked sensors can affect how the system functions.
	The sensors in the front or rear bumper could be damaged.
	There is not enough room in the parking space for your vehicle to safely park.
	There is not enough space for the parking maneuver on the opposite side of the parking space.
	The parking space is more than 1.5 m (5 ft) or less than 0.5 m (2 ft) away.
	The vehicle speed is greater than 35 km/h (22 mph) for parallel parking or greater than 30 km/h (19 mph) for perpendicular parking.

Transit (TTS) Vehicles Built From: 27-01-2020 Vehicles Built Up To: 20-09-2020, CG3796en enGBR, Edition date: 201911, First-Printing

Symptom	Possible Cause
	You recently disconnected or replaced the battery. After you reconnect the battery you must drive your vehicle on a straight road for a short period of time.
The system does not correctly position your vehicle in a parking space.	An irregular curb along the parking space prevents the system from correctly aligning your vehicle.
	Vehicles or objects bordering the space may not be correctly parked.
	Your vehicle stopped too far past the parking space.
	The tires may not be correctly installed or maintained. For example, not inflated correctly, improper size, or of different sizes.
	A repair or alteration changes the detection capabilities.
	A parked vehicle has a high attachment. For example, a salt sprayer, snowplow or moving truck bed.
	The parking space length or position of parked objects changes after your vehicle passes the space.
	You are using a spare tire or a tire that is significantly worn more than the other tires.
	The temperature around your vehicle quickly changes. For example, driving from a heated garage into cold outside temperature, or after leaving a car wash.

REAR VIEW CAMERA

WARNING: The rear view camera system is a reverse aid supplement device that still requires the driver to use it in conjunction with the interior and exterior mirrors for maximum coverage.

WARNING: Objects that are close to either corner of the bumper or under the bumper, might not be seen on the screen due to the limited coverage of the camera system.

WARNING: Reverse your vehicle slowly. Failure to follow this instruction could result in the loss of control of your vehicle, personal injury or death.

WARNING: Use caution when the rear cargo door is ajar. If the rear cargo door is ajar, the camera will be out of position and the video image may be incorrect. All guidelines disappear when the rear cargo door is ajar. Failure to follow this instruction could result in personal injury.

Transit (TTS) Vehicles Built From: 27-01-2020 Vehicles Built Up To: 20-09-2020, CG3796en enGBR, Edition date: 201911, First-Printing

WARNING: Use caution when turning camera features on or off when the transmission is not in park (P). Make sure your vehicle is not moving.

WARNING: To help avoid personal injury always use caution when in reverse (R) and when using the rear view camera.

The rear view camera provides an image of the area behind your vehicle. During operation, lines appear in the display that represents the path of your vehicle and proximity to objects behind it.



E296493

The camera is integrated to the central high mounted stop lamp.

Using the Rear View Camera

The rear view camera system displays what is behind your vehicle when you shift the transmission into reverse (R).

Note: *The reverse sensing system is not effective at speeds above 5 km/h (3 mph) and may not detect certain angular or moving objects.*

Note: *If the transmission is in reverse (R) and the rear cargo door is open, no rear view camera features will display.*

Note: *When towing, the camera only sees what you are towing. This might not provide adequate coverage as it usually provides in normal operation and some objects might not be seen. In some vehicles, the guidelines may disappear when you connect the trailer tow connector.*

The system may not correctly operate in any of the following conditions:

- Nighttime or dark areas if the reverse lamps are not operating.
- If the camera is obstructed. Clean the lens with a soft, lint-free cloth and non-abrasive cleaner.
- The camera is misaligned due to damage to the rear of your vehicle.

Rear View Camera Guidelines

WARNING: Objects above the camera may not be visible. Check the area behind your vehicle when necessary.

Transit (TTS) Vehicles Built From: 27-01-2020 Vehicles Built Up To: 20-09-2020, CG3796en enGBR, Edition date: 201911, First-Printing

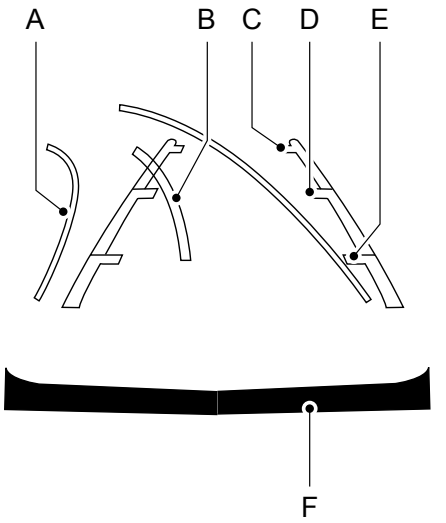

E142436

A	Active guidelines.
B	Centerline.
C	Fixed guideline: Green zone.
D	Fixed guideline: Yellow zone.
E	Fixed guideline: Red zone.
F	Rear bumper.

If the vehicle battery is disconnected, the guidelines are not fully functional directly after the battery is reconnected. The guidelines become fully functional after you drive your vehicle as straight as possible for five minutes at a minimum speed of 50 km/h (31 mph).

The system uses three types of guidelines to help you see what is behind your vehicle:

A. Active guidelines show the intended path of your vehicle when reversing.
B. The centerline helps align the center of your vehicle with a trailer.
C. Fixed guidelines show the actual path of your vehicle when reversing in a straight line. This can be helpful when backing into a parking space or aligning your vehicle with another object.

Active guidelines are only available with fixed guidelines. To use active guidelines, turn the steering wheel to point the guidelines toward an intended path. If you change the steering wheel position when driving in reverse (R), your vehicle might deviate from the original intended path.

The fixed and active guidelines fade in and out depending on the steering wheel position. When the steering wheel position is straight the active guidelines are not visible. Objects in the red zone are closest to your vehicle and objects in the green zone are further from your vehicle.

Note: *Guidelines are only available when the transmission is in reverse (R).*

System Settings

You can adjust the camera settings using the vehicle settings menu. See **Settings** (page 350).

Manual Zoom

WARNING: When manual zoom is on, the full area behind your vehicle may not show. Be aware of your surroundings when using the manual zoom feature.

Manual zoom is only available when you shift the transmission into reverse (R).

Transit (TTS) Vehicles Built From: 27-01-2020 Vehicles Built Up To: 20-09-2020, CG3796en enGBR, Edition date: 201911, First-Printing

Selectable settings for this feature are Zoom in (+) and Zoom Out (-). Press the symbol in the camera screen to change the view. The default setting is Zoom OFF. The rear bumper remains in the image as a reference point.

Note: *Only the centerline shows when you switch on manual zoom.*

Rear View Camera Delay

You can switch this feature on or off using the vehicle settings menu. See **Settings** (page 350). The default setting is off.

When shifting the transmission out of reverse (R) and into any gear other than park (P), the camera image remains in the display until:

- Your vehicle speed sufficiently increases.
- You shift your vehicle into park (P).
- You engage the parking brake on vehicles with a manual transmission.

Enhanced Parking Aids or Park Pilot (If Equipped)

You can switch this feature on or off using the vehicle settings menu. See **Settings** (page 350).

When the reverse sensing system detects an object, it displays red, yellow and green indicators at the top of the image.

180 DEGREE CAMERA

WARNING: The rear view camera system is a reverse aid supplement device that still requires the driver to use it in conjunction with the interior and exterior mirrors for maximum coverage.

WARNING: Objects that are close to either corner of the bumper or under the bumper, might not be seen on the screen due to the limited coverage of the camera system.

WARNING: Use caution when turning camera features on or off when the transmission is not in park (P). Make sure your vehicle is not moving.

WARNING: You are responsible for controlling your vehicle at all times. The system is designed to be an aid and does not relieve you of your responsibility to drive with due care and attention. Failure to follow this instruction could result in the loss of control of your vehicle, personal injury or death.

Note: *Use caution using the 180 view when any of the doors are ajar. If a door is ajar, the camera will be out of position and the video image may be incorrect.*

Front View Camera

WARNING: The front camera system still requires the driver to use it in conjunction with looking out of your vehicle.

Note: *The system turns off the front video image when your vehicle is in motion at low speed, except when in reverse (R).*

Note: *The area displayed on the screen may vary according to your vehicle's orientation or road condition.*

Note: *The camera system may not operate correctly if mud, water or debris obstructs the camera's view. You can clean the lens with a soft, lint-free cloth and non-abrasive cleaner or by using your front washer. See* ***Wipers and Washers*** *(page 66).*

Transit (TTS) Vehicles Built From: 27-01-2020 Vehicles Built Up To: 20-09-2020, CG3796en enGBR, Edition date: 201911, First-Printing

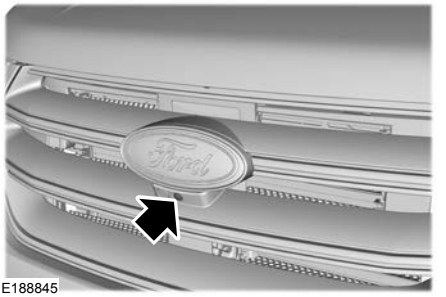

The front view camera is located in the grille. It provides a video image of the area in front of your vehicle. It adds assistance to the driver while driving forward at low speeds.

Using the 180 degree camera system

The 180 degree camera system consists of front and rear cameras. The system:

- Allows you to see what is directly in front or behind your vehicle.
- Provides cross traffic view in front and behind your vehicle.
- Provides visibility during parking maneuvers.

The camera system button is located near the display screen and turns on the front camera when your vehicle is not in reverse (R).

The front view camera will switch off if your vehicle speed exceeds 10 km/h (6 mph).

Switch the system back on by pressing the camera system button once below speed threshold.

Camera Views

Press the camera system button to activate the camera views and the camera view buttons.

When in park (P), neutral (N) or drive (D), only the front images display when you press the button.

When in reverse (R), only the rear images display.

Press the camera view button to toggle between the different camera views.

Normal View: Provides an image of what is directly in front or behind your vehicle.

Expanded View: Provides an extended view of what is in front or behind your vehicle.

Zooms in on the image.

Transit (TTS) Vehicles Built From: 27-01-2020 Vehicles Built Up To: 20-09-2020, CG3796en enGBR, Edition date: 201911, First-Printing

PRINCIPLE OF OPERATION

Cruise control lets you maintain a set speed without keeping your foot on the accelerator pedal. You can use cruise control when your vehicle speed is greater than 30 km/h (20 mph).

USING CRUISE CONTROL

WARNING: Do not use cruise control on winding roads, in heavy traffic or when the road surface is slippery. This could result in loss of vehicle control, serious injury or death.

WARNING: When you are going downhill, your vehicle speed could increase above the set speed. The system does not apply the brakes.

The cruise controls are on the steering wheel.

Switching Cruise Control On



Press the button.

Switching Cruise Control Off



Press the button when the system is in standby mode. The system also turns off when you switch the ignition off.

Note: *The set speed erases when you switch the system off.*

Setting the Cruise Speed

Drive to the required speed.





Press the toggle button upward or downward to set the current speed.

Take your foot off the accelerator pedal.

Note: *The set speed appears in the information display.*

Changing the Set Speed



Press the toggle button upward to increase the set speed.



Press the toggle button downward to decrease the set speed.

You can adjust the set speed in small or large increments. Press the toggle button upward or downward once to adjust the set speed in small increments. Press and hold the toggle button upward or downward to adjust the set speed in large increments.

Note: *If you accelerate by pressing the accelerator pedal, the set speed does not change. When you release the accelerator pedal, your vehicle returns to the speed that you previously set.*

Canceling the Set Speed



Press the button, or press the brake pedal to cancel the set speed.

Note: *The set speed is stored.*

Note: *The system cancels if the vehicle speed drops below 16 km/h (10 mph) under the set speed when driving uphill.*

Resuming the Set Speed



Press to resume the set speed.

Transit (TTS) Vehicles Built From: 27-01-2020 Vehicles Built Up To: 20-09-2020, CG3796en enGBR, Edition date: 201911, First-Printing

Cruise Control Indicator



The indicator appears when you switch the system on.

USING ADAPTIVE CRUISE CONTROL

WARNING: You are responsible for controlling your vehicle at all times. The system is designed to be an aid and does not relieve you of your responsibility to drive with due care and attention. Failure to follow this instruction could result in the loss of control of your vehicle, personal injury or death.

WARNING: Pay close attention to changing road conditions such as entering or leaving a highway, on roads with intersections or roundabouts, roads without visible lanes of travel, roads that are winding, slippery, unpaved, or steep slopes.

WARNING: The system may not detect stationary or slow moving vehicles below 10 km/h (6 mph).

WARNING: Do not use the system when towing a trailer that has aftermarket electronic trailer brake controls. Failure to follow this instruction could result in the loss of control of your vehicle, personal injury or death.

WARNING: The system is not a crash warning or avoidance system.

WARNING: The system does not detect pedestrians or objects in the road.

WARNING: The system does not detect oncoming vehicles in the same lane.

WARNING: Do not use the system in poor visibility, for example fog, heavy rain, spray or snow.

WARNING: Do not use tire sizes other than those recommended because this can affect the normal operation of the system. Failure to do so may result in a loss of vehicle control, which could result in serious injury.

The system adjusts the vehicle speed to maintain the set gap between you and the vehicle in front of you in the same lane. You can select four gap settings.

The system uses a radar that projects a beam directly in front of your vehicle.



E248321

The adaptive cruise controls are on the steering wheel.

Switching Adaptive Cruise Control On



Press to set the system in standby mode.

Transit (TTS) Vehicles Built From: 27-01-2020 Vehicles Built Up To: 20-09-2020, CG3796en enGBR, Edition date: 201911, First-Printing


E260516

The indicator, current gap setting and set speed appear in the information display.

Setting the Adaptive Cruise Speed

Drive to the required speed.

SET+ Press the toggle button upward to set the current speed.

Take your foot off the accelerator pedal.

The indicator, current gap setting and set speed appear in the information display.


E249552

A vehicle graphic appears in the information display if the system detects a vehicle in front of you.

Note: *When adaptive cruise control is active, the speedometer may vary slightly from the set speed displayed in the information display.*

Following a Vehicle

WARNING: When following a vehicle that is braking, your vehicle does not always decelerate quickly enough to avoid a crash without driver intervention. Apply the brakes when necessary. Failure to follow this instruction could result in personal injury or death.

WARNING: The system only warns of vehicles detected by the radar sensor. In some cases there may be no warning or a delayed warning. Apply the brakes when necessary. Failure to follow this instruction could result in personal injury or death.

When a vehicle ahead of you enters the same lane or a slower vehicle is ahead in the same lane, the vehicle speed adjusts to maintain a preset gap distance. A vehicle graphic appears in the information display.

Note: *When you are following a vehicle and you switch on a direction indicator, adaptive cruise control may provide a small temporary acceleration to help you pass.*

Your vehicle maintains a consistent gap from the vehicle ahead until:

- The vehicle in front of you accelerates to a speed above the set speed.
- The vehicle in front of you moves out of the lane you are in.
- You set a new gap distance.

The system applies the brakes to slow your vehicle to maintain a safe gap distance from the vehicle in front. The system only applies limited braking. You can override the system by applying the brakes.

If the system determines that its maximum braking level is not sufficient, an audible warning sounds when the system continues to brake. Take immediate action.

Transit (TTS) Vehicles Built From: 27-01-2020 Vehicles Built Up To: 20-09-2020, CG3796en enGBR, Edition date: 201911, First-Printing

Note: *The brakes may emit noise when applied by the system.*

Setting the Gap Distance



You can decrease or increase the distance between your vehicle and the vehicle in front by pressing the gap control.

Note: *It is your responsibility to select a gap appropriate to the driving conditions.*



The selected gap appears in the information display as shown by the bars in the image. You can select four gap settings.

Adaptive Cruise Control Distance Between Vehicle Settings

Set Speed km/h (mph)	Graphic Display - Bars Indicated Between Vehicles	Time Gap - Seconds	Distance Gap m (yd)	Dynamic Behavior
100 (62)	1	1	28 (31)	Sport.
100 (62)	2	1.4	39 (43)	Normal.
100 (62)	3	1.8	50 (55)	Normal.
100 (62)	4	2.2	61 (67)	Comfort.

When you switch the ignition on, the system selects the last chosen gap setting.

Overriding the System

WARNING: If you override the system by pressing the accelerator pedal, it does not automatically apply the brakes to maintain a gap from any vehicle ahead.

Use the accelerator pedal to intentionally exceed the set speed limit.

When you override the system, the vehicle graphic disappears from the information display.

Changing the Set Speed



Press the toggle button upward to increase the set speed.



Press the toggle button downward to decrease the set speed.

You can adjust the set speed in small or large increments. Press the toggle button upward or downward once to adjust the set speed in small increments. Press and hold the toggle button upward or downward to adjust the set speed in large increments.

Transit (TTS) Vehicles Built From: 27-01-2020 Vehicles Built Up To: 20-09-2020, CG3796en enGBR, Edition date: 201911, First-Printing

The system may apply the brakes to slow your vehicle to the new set speed. The set speed continuously displays in the information display when the system is active.

Canceling the Set Speed



Press the button, or tap the brake pedal.

The last set speed displays with a strikethrough and the last gap setting appears but does not erase.

Note: *The set speed also cancels if you press the clutch pedal for an extended period.*

Resuming the Set Speed



Press the button.

The vehicle speed returns to the previously set speed and gap setting. The set speed continuously shows in the information display when the system is active.

Note: *Only use resume if you are aware of the set speed and intend to return to it.*

Automatic Cancellation

The system does not operate if the vehicle speed is below 20 km/h (12 mph). A tone sounds and adaptive braking releases if the vehicle speed falls below 20 km/h (12 mph).

Automatic cancellation can also occur when:

- The tires lose traction.
- The engine speed is too low.
- You apply the parking brake.

Note: *If the engine speed drops too low, the information display advises you to shift to a lower gear.*

Hilly Condition Usage

Select a lower gear when the system is active and you are driving downhill on steep grades, for example in mountainous areas. The system needs additional engine braking in these situations to reduce the load on the brake system to prevent it from overheating.

Note: *A tone sounds and the system turns off if it applies brakes for an extended period of time. This allows the brakes to cool. The system operates after the brakes cool.*

Switching Adaptive Cruise Control Off



Press the button.

Note: *The set speed erases when you switch the system off.*

Detection Issues

WARNING: On rare occasions, detection issues can occur due to the road infrastructures, for example bridges, tunnels and safety barriers. In these cases, the system may brake late or unexpectedly. At all times, you are responsible for controlling your vehicle, supervising the system and intervening, if required.

WARNING: If the system malfunctions, have your vehicle checked as soon as possible.

The radar has a limited field of view. It does not detect all vehicles in all situations and could detect vehicles later that you expect. The lead vehicle graphic does not display if the system does not detect a vehicle in front of you.

Transit (TTS) Vehicles Built From: 27-01-2020 Vehicles Built Up To: 20-09-2020, CG3796en enGBR, Edition date: 201911, First-Printing

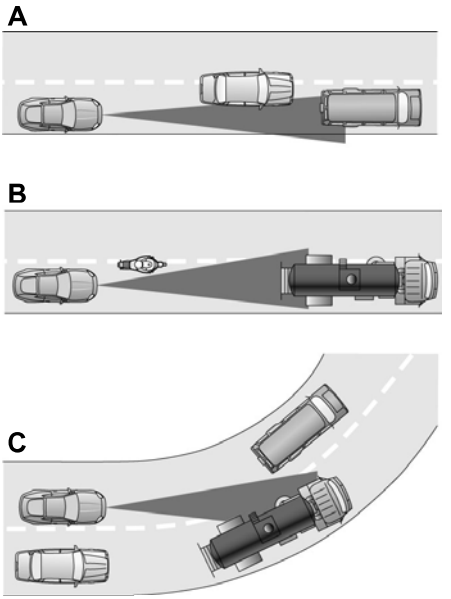

E71621

Detection issues can occur:

A When driving on a different line than the vehicle in front.

B With vehicles that edge into your lane. The system can only detect these vehicles once they fully move into your lane.

C There may be issues with the detection of vehicles in front when driving into and coming out of a bend or curve in the road.

In these cases, the system may brake late or unexpectedly. You should stay alert and take action when necessary.

If something hits the front of your vehicle or damage occurs, the radar-sensing zone may change. This could cause the system to malfunction. Have your vehicle checked as soon as possible.

System Not Available

The system may not turn on if there is:

- A blocked sensor.
- High brake temperature.
- A failure in the system or a related system.

Adaptive Cruise Control System Sensors

WARNING: The system may not operate properly if the sensor is blocked. Keep the windshield free from obstruction.



E243054

The camera is mounted behind the interior mirror.

Transit (TTS) Vehicles Built From: 27-01-2020 Vehicles Built Up To: 20-09-2020, CG3796en enGBR, Edition date: 201911, First-Printing

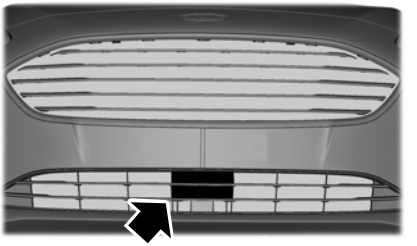

E244279

The radar is behind the front grille below the license plate.

A message displays if something obstructs the radar signals from the sensor. The system cannot detect a vehicle ahead and does not function when something blocks the sensor.

Note: *You cannot see the sensor, it is behind a fascia panel.*

Note: *Keep the front of your vehicle free of dirt, metal badges or objects. Vehicle front protectors, aftermarket lights, additional paint or plastic coatings could also degrade sensor performance.*

Cause	Action
The surface of the radar in the radiator grille is dirty or obstructed.	Clean the radiator grille in front of the radar or remove any obstruction.
The surface of the radar is clean but the message remains in the display.	Wait a short period of time. It may take several minutes for the radar to detect that it is free from obstruction.
Heavy rain or snow interfere with the radar signals.	Do not use the system in these conditions because it may not detect any vehicles ahead.
Swirling water, snow or ice on the surface of the road interfere with the radar signals.	Do not use the system in these conditions because it may not detect any vehicles ahead.
You are in a desert or remote area with no other vehicles and no roadside objects.	Wait a short period of time or switch to normal cruise control.

Due to the nature of radar technology, a blocked sensor message could display when the sensor is not blocked. This can happen, for example, when driving in sparse rural or desert environments. A false blocked condition self clears or clears after you switch the ignition off and on.

Switching to Normal Cruise Control

WARNING: Normal cruise control will not brake when your vehicle is approaching slower vehicles. Always be aware of which mode you have selected and apply the brakes when necessary.

Transit (TTS) Vehicles Built From: 27-01-2020 Vehicles Built Up To: 20-09-2020, CG3796en enGBR, Edition date: 201911, First-Printing

You can change from adaptive cruise control to cruise control using the information display.

To switch between adaptive cruise control and normal cruise control, use the information display controls on the steering wheel to select the following:

Menu Item	Action
Driver assist.	Press the menu button.
Cruise control	Press the ***OK*** button.
Mode	Press the ***OK*** button. Press the toggle button upward or downward to choose your required setting. Press the ***OK*** button.



The cruise control indicator replaces the adaptive cruise control indicator if you select normal cruise control. The gap setting does not display, the system does not automatically respond to lead vehicles and adaptive braking does not activate. The system remembers the last setting when you start your vehicle.

Adaptive Cruise Control Indicator



The indicator appears when you switch the system on.

The indicator appears in the information display when the system is in standby mode and when you set the adaptive cruise speed.

Adaptive Cruise Control Information Messages

Message	Action
Adaptive cruise control not available Sensor blocked See manual	The radar has reduced visibility.
Adaptive cruise control not available	The system is not available.
Adaptive cruise control malfunction	The system has malfunctioned. Have your vehicle checked as soon as possible.
Cruise control active Adaptive braking off	You have switched normal cruise control on. Adaptive braking turns off.

Transit (TTS) Vehicles Built From: 27-01-2020 Vehicles Built Up To: 20-09-2020, CG3796en enGBR, Edition date: 201911, First-Printing

Adaptive Cruise Control With Speed Sign Recognition (If Equipped)

WARNING: You are responsible for controlling your vehicle at all times. The system is designed to be an aid and does not relieve you of your responsibility to drive with due care and attention. Failure to follow this instruction could result in the loss of control of your vehicle, personal injury or death.

The system combines speed sign recognition with adaptive cruise control. The system allows you to set the vehicle speed to the speed limit detected by the speed sign recognition system. For example, if the speed sign recognition system detects a 80 km/h (50 mph) speed limit, the vehicle speed is set to 80 km/h (50 mph).

Note: *The system does not set the vehicle speed to speed limits shown with a supplementary traffic sign in the information display.*

Note: *You can override the set speed at any time.*

Note: *The adaptive cruise control gap setting normally operates.*

Switching Between the Cruise Control Modes

You can change between the cruise control modes using the information display.

To switch between the cruise control modes, use the information display controls on the steering wheel to select the following:

Menu Item	Action
Driver assist.	Press the menu button.
Cruise control	Press the ***OK*** button.
Mode	Press the ***OK*** button. Press the toggle button upward or downward to choose your required setting. Press the ***OK*** button.

Intelligent Mode



E265663

If you select this mode, a bracket appears around the set speed and the detected speed limit sign in the information display. The system is designed to set the vehicle speed to the speed limit detected by the speed sign recognition system before your vehicle passes the speed limit sign.

Under certain conditions, the system may not adjust the vehicle speed until after your vehicle passes the speed limit sign.

Transit (TTS) Vehicles Built From: 27-01-2020 Vehicles Built Up To: 20-09-2020, CG3796en enGBR, Edition date: 201911, First-Printing

Note: *The set speed adjusts when the system detects a different maximum speed limit.*

If the system does not detect a speed limit, the vehicle speed remains at the current set speed.

Automatic Cancellation

If the speed sign recognition system detects a speed limit below the minimum adaptive cruise control set speed, a tone sounds and the system returns to standby mode.

Adjusting the Set Speed Tolerance Settings

You can set a permanent speed tolerance that is above or below the detected speed limit through the tolerance menu in the information display.

To adjust the speed tolerance setting, use the information display controls on the steering wheel to select the following:

Menu Item	Action
Driver assist.	Press the menu button.
Cruise control	Press the ***OK*** button.
Tolerance	Press the ***OK*** button. Press the toggle button upward or downward to choose your required speed setting. Press the ***OK*** button.

Adaptive Mode

If you select this mode, adaptive cruise control operates with manual set speed input. The system does not set the vehicle speed to the speed limit detected by the speed sign recognition system.

Normal Mode

If you select this mode, normal cruise control operates. The gap setting does not display, the system does not automatically respond to lead vehicles and adaptive braking does not activate.

Adaptive Cruise Control With Speed Sign Recognition Information Messages

Message	Action
Adaptive cruise control Speed sign recognition not available	Navigation system based speed limit information is not available. If the message continues to appear, have your vehicle checked as soon as possible.

Transit (TTS) Vehicles Built From: 27-01-2020 Vehicles Built Up To: 20-09-2020, CG3796en enGBR, Edition date: 201911, First-Printing

SPEED LIMITER

Principle of Operation

WARNING: When you are going downhill, your vehicle speed could increase above the set speed. The system does not apply the brakes.

WARNING: The system is designed to aid the driver. It is not intended to replace your attention and judgment. You are still responsible to drive with due care and attention.

The system allows you to set a speed to which your vehicle becomes limited. The set speed sets the effective maximum speed of your vehicle. You can temporarily exceed the set speed if required, for example to overtake.

Using Speed Limiter

The controls are on the steering wheel.

Switching the System On and Off

LIM Press to set the system in standby mode. Press again to switch the system off.

Setting the Speed Limiter

SET+ SET- Press the toggle button upward or downward with the system in standby mode to set the speed limiter to the current vehicle speed. The set speed is stored and displayed in the information display.

You can adjust the set speed in small or large increments. Press the toggle button upward or downward once to adjust the set speed in small increments. Press and hold the toggle button upward or downward to adjust the set speed in large increments.

Canceling the Set Speed

CAN Press to cancel the set speed limiter. The system returns to standby mode.

Resuming the Set Speed

RES Press to resume the set speed limiter.

Intentionally Exceeding the Speed Limit

Firmly press the accelerator pedal to temporarily exceed the set speed limit. The system resumes when the vehicle speed drops below the set speed limit, or when you press the **RES** button.

System Warnings

If you intentionally exceed the set speed, a warning appears in the information display.

If you unintentionally exceed the set speed, for example when you are going downhill, a warning appears in the information display and a tone sounds.

INTELLIGENT SPEED LIMITER

Principle of Operation

WARNING: When you are going downhill, your vehicle speed could increase above the set speed. The system does not apply the brakes.

Transit (TTS) Vehicles Built From: 27-01-2020 Vehicles Built Up To: 20-09-2020, CG3796en enGBR, Edition date: 201911, First-Printing

WARNING: The system is designed to aid the driver. It is not intended to replace your attention and judgment. You are still responsible to drive with due care and attention.

The system allows you to limit the vehicle speed to the maximum speed limit detected by the traffic sign recognition system. For example, if the traffic sign recognition system detects a 80 km/h (50 mph) speed limit, the vehicle speed is limited to 80 km/h (50 mph). You can temporarily exceed the set speed if required, for example to overtake.

Note: *The system does not detect speed limits shown with a supplementary traffic sign.*

You can change between the speed limiter modes using the information display. See **General Information** (page 89).

You can set a permanent speed tolerance that is in addition to the detected speed limit through the tolerance menu in the information display. See **General Information** (page 89).

Using Intelligent Speed Limiter

The controls are on the steering wheel.

Switching the System On and Off

LIM Press to set the system in standby mode. The system prompts you to set a speed or show the detected speed limit as the set speed. Press again to switch the system off.

Note: *The system does not limit the vehicle speed in standby mode.*

Setting the Speed Limiter

SET+ SET- Press the toggle button upward or downward with the system in standby mode to set the speed limiter to the current vehicle speed. The set speed is stored and displayed in the information display.

Note: *The set speed limiter adjusts when the system detects a different maximum speed limit.*

Note: *If the system cannot detect a maximum speed limit, the system returns to standby mode.*

You can adjust the set speed in small or large increments. Press the toggle button upward or downward once to adjust the set speed in small increments. Press and hold the toggle button upward or downward to adjust the set speed in large increments.

Canceling the Set Speed

CAN Press to cancel the set speed limiter. The system returns to standby mode.

Resuming the Set Speed

RES Press to resume the set speed limiter. The system sets the speed limiter to the detected maximum speed limit at the time it resumes.

Intentionally Exceeding the Speed Limit

Firmly press the accelerator pedal to temporarily exceed the set speed limit. The system resumes when the vehicle speed drops below the set speed limit, or when you press the **RES** button.

Transit (TTS) Vehicles Built From: 27-01-2020 Vehicles Built Up To: 20-09-2020, CG3796en enGBR, Edition date: 201911, First-Printing

System Warnings

A warning appears in the information display if any of the following occur:

- The vehicle speed exceeds the current set speed.
- The system detects a maximum speed limit that is lower than the current vehicle speed.
- You intentionally exceed the set speed.
- You unintentionally exceed the set speed, for example when you are going downhill. A tone also sounds.

Note: *A tone sounds if you continue to exceed the set speed.*

Note: *If the traffic sign recognition system detects a speed limit outside the operational speed range, a tone sounds and the system returns to standby mode.*

DRIVER ALERT

WARNING: The system is designed to aid the driver. It is not intended to replace your attention and judgment. You are still responsible to drive with due care and attention.

WARNING: At all times, you are responsible for controlling your vehicle, supervising the system and intervening, if required. Failure to take care may result in the loss of control of your vehicle, serious personal injury or death.

WARNING: The system may not operate properly if the sensor is blocked. Keep the windshield free from obstruction.

WARNING: Take regular rest breaks if you feel tired. Do not wait for the system to warn you.

WARNING: Certain driving styles may result in the system warning you even if you are not feeling tired.

WARNING: In cold and severe weather conditions the system may not function. Rain, snow and spray can all limit sensor performance.

WARNING: The system will not operate if the sensor cannot track the road lane markings.

WARNING: If damage occurs in the immediate area surrounding the sensor, have your vehicle checked as soon as possible.

WARNING: The system may not correctly operate if your vehicle is fitted with a suspension kit not approved by us.

The system is designed to alert you if it calculates that you are becoming drowsy or if your driving deteriorates.

The system calculates your alertness level based upon your driving behavior in relation to the lane markings and other factors when the vehicle speed is greater than approximately 65 km/h (40 mph).

Driver Alert System Warnings

The warning system has two stages:

1. A temporary warning is issued to advise you to take a rest. This message only appears for a short time.
2. If you do not rest and the system continues to detect that your driving deteriorates, it issues a further warning. This remains in the information display until you cancel it.

Transit (TTS) Vehicles Built From: 27-01-2020 Vehicles Built Up To: 20-09-2020, CG3796en enGBR, Edition date: 201911, First-Printing

Note: *The system does not warn you if the vehicle speed falls below approximately 65 km/h (40 mph).*

Driver Alert System Display

To view the driver alert system status, use the information display controls on the steering wheel to select the following:

Menu Item	Action
Settings	Press the menu button.
Information	Press the ***OK*** button.
Driver alert	Press the ***OK*** button.

Your calculated alertness level is shown by six steps as a colored bar. The bar travels from right to left as your calculated alertness level decreases.

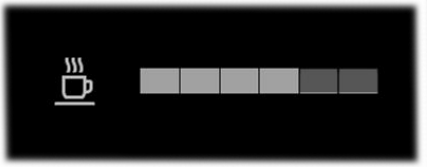

E249476

Your calculated alertness level is good.



E249477

Your calculated alertness level is low. You should stop your vehicle and take a rest as soon as it is safe to do so.

Your calculated alertness level shows in gray if:

- The sensor cannot track the road lane markings.
- The vehicle speed is less than approximately 65 km/h (40 mph).

Switching Driver Alert On or Off

To switch driver alert on or off, use the information display controls on the steering wheel to select the following:

Menu Item	Action
Driver assist.	Press the menu button.
Driver alert	Press the ***OK*** button.

Transit (TTS) Vehicles Built From: 27-01-2020 Vehicles Built Up To: 20-09-2020, CG3796en enGBR, Edition date: 201911, First-Printing

Note: *The system remains on or off depending on how it was last set.*

Resetting Driver Alert

You can reset the system by:

- Switching the ignition off and on when your vehicle is stationary.
- Opening and closing the driver door when your vehicle is stationary.

Driver Alert System Messages

Message	Action
Driver fatigue warning Rest suggested	Displays when we recommend that you take a break due to low alertness levels.
Driver fatigue warning Rest now	Displays when you must take a break due to low alertness levels.

LANE KEEPING SYSTEM

WARNING: You are responsible for controlling your vehicle at all times. The system is designed to be an aid and does not relieve you of your responsibility to drive with due care and attention. Failure to follow this instruction could result in the loss of control of your vehicle, personal injury or death.

WARNING: The system may not function if the sensor is blocked.

WARNING: The sensor may incorrectly track lane markings as other structures or objects. This can result in a false or missed warning.

WARNING: In cold and severe weather conditions the system may not function. Rain, snow and spray can all limit sensor performance.

WARNING: Large contrasts in outside lighting can limit sensor performance.

WARNING: The system will not operate if the sensor cannot track the road lane markings.

WARNING: If damage occurs in the immediate area surrounding the sensor, have your vehicle checked as soon as possible.

WARNING: The system may not correctly operate if your vehicle is fitted with a suspension kit not approved by us.

Transit (TTS) Vehicles Built From: 27-01-2020 Vehicles Built Up To: 20-09-2020, CG3796en enGBR, Edition date: 201911, First-Printing

The system is designed to alert you by providing temporary steering assistance or steering wheel vibration when it detects an unintended lane departure. The system detects and tracks the road lane markings using a camera mounted behind the interior mirror. The system only operates when the vehicle speed is greater than approximately 60 km/h (37 mph). You can view the system status in the information display.

Note: *The system works when the camera can detect at least one lane marking or the edge of the road.*

The system may not correctly operate in any of the following conditions:

- The system does not detect at least one lane marking or the edge of the road.
- You switch the direction indicator on.
- You apply direct steering, accelerate fast or brake hard.
- The vehicle speed is less than 60 km/h (37 mph).
- The anti-lock brake, stability control or traction control system activates.
- Narrow lane width.

The system may not correct lane positioning in any of the following conditions:

- High winds.
- Uneven road surfaces.
- Heavy or uneven loads.
- Incorrect tire pressure.

Switching Lane Keeping System On or Off



E132099

Press the button on the direction indicator stalk.

Note: *A warning indicator may remain illuminated in the information display when you switch the system off.*

Note: *The system may turn on when you start your vehicle.*

Lane Keeping System Settings

The system has different settings that you can view or adjust using the information display.

Note: *The system remembers the last setting when you start your vehicle. If the system detects a MyKey, the mode is set to alert.*

Alert Mode

Provides steering wheel vibration when the system detects an unintended lane departure.

Adjusting the Steering Wheel Vibration Intensity

1. Using the information display controls on the steering wheel, select ***Driver assist.***.
2. Select ***Lane keeping system***.
3. Select ***Intensity***.
4. Select a setting and press the ***OK*** button.

Transit (TTS) Vehicles Built From: 27-01-2020 Vehicles Built Up To: 20-09-2020, CG3796en enGBR, Edition date: 201911, First-Printing

Note: *This setting does not affect aid mode.*

Note: *The system remembers the last setting when you start your vehicle.*

Adjusting the Lane Keeping System Sensitivity

1. Using the information display controls on the steering wheel, select ***Driver assist.***.
2. Select ***Lane keeping system***.
3. Select ***Sensitivity***.
4. Select a setting and press the ***OK*** button.

Aid Mode

Provides temporary steering assistance toward the lane center when the system detects an unintended lane departure.

Note: *When aid mode is on and the system does not detect any steering activity for a short period of time, for example lightly holding the steering wheel, the system alerts you to put your hands on the steering wheel.*

Alert and Aid Mode

Provides temporary steering assistance toward the lane center when the system detects an unintended lane departure. If your vehicle continues drifting out of the lane, the steering wheel vibrates.

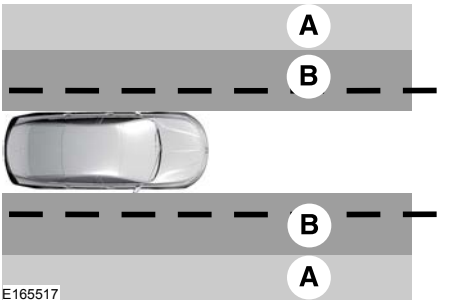

A Alert mode.

B Aid mode.

Note: *The diagram illustrates general zone coverage. It does not provide exact zone parameters.*

Switching the Lane Keeping System Mode

1. Using the information display controls on the steering wheel, select ***Driver assist.***.
2. Select ***Lane keeping system***.
3. Select ***Mode***.
4. Select a setting and press the ***OK*** button.

Lane Keeping System Display



When the system is on, a graphic of lane markings appears in the information display.

Transit (TTS) Vehicles Built From: 27-01-2020 Vehicles Built Up To: 20-09-2020, CG3796en enGBR, Edition date: 201911, First-Printing

Lane Keeping System Warning Lamps and Indicators

Lane Keeping Alert Indicators



It illuminates in the information display when you switch the system on and Aid Mode or Alert and Aid Mode are selected.



It illuminates in the information display when you switch the system on and Alert Mode is selected.

Lane Keeping Aid Warning Lamp



It could illuminate when you switch the system off. If it illuminates when you are driving, this indicates a malfunction. Have your vehicle checked as soon as possible.

Black and White Information Display

Indicator	System Status
Gray.	Unavailable.
White.	Available.
White and inverted.	Temporary steering assistance.
White and flashing.	Temporary steering assistance and steering wheel vibration.

Color Information Display

Indicator	System Status
Gray.	Unavailable.
Green.	Available.
Amber.	Temporary steering assistance.
Red.	Temporary steering assistance and steering wheel vibration.

Lane Keeping System Messages

Message	Action
Lane keeping system malfunction Service required	The system has detected a fault that requires service. Have your vehicle checked as soon as possible.

Transit (TTS) Vehicles Built From: 27-01-2020 Vehicles Built Up To: 20-09-2020, CG3796en enGBR, Edition date: 201911, First-Printing

BLIND SPOT INFORMATION SYSTEM

WARNING: Do not use the blind spot information system as a replacement for using the interior and exterior mirrors or looking over your shoulder before changing lanes. The blind spot information system is not a replacement for careful driving.

WARNING: The system may not operate properly during severe weather conditions, for example snow, ice, heavy rain and spray. Always drive with due care and attention. Failure to take care may result in a crash.

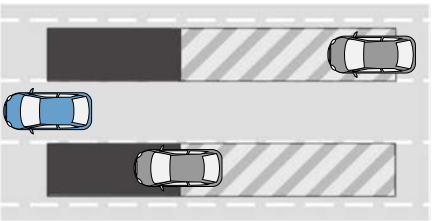

E255695

The system is designed to detect vehicles that may have entered the blind spot zone. The detection area is on both sides of your vehicle, extending rearward from the exterior mirrors to approximately 4 m (13 ft) beyond the rear bumper. The detection area extends to approximately 18 m (59 ft) beyond the rear bumper when the vehicle speed is greater than 48 km/h (30 mph) to alert you of faster approaching vehicles.

Note: *The system does not prevent contact with other vehicles. It is not designed to detect parked vehicles, pedestrians, animals or other infrastructures.*

Using the Blind Spot Information System

Vehicles with Automatic Transmission

The system turns on when all of the following occur:

- You start your vehicle.
- You shift into drive (D).
- The vehicle speed is greater than 10 km/h (6 mph).

Note: *The system does not operate in park (P) or reverse (R).*

Vehicles with Manual Transmission

The system turns on when all of the following occur:

- You start your vehicle.
- The vehicle speed is greater than 10 km/h (6 mph).

Note: *The system does not operate in reverse (R).*

Blind Spot Information System Sensors

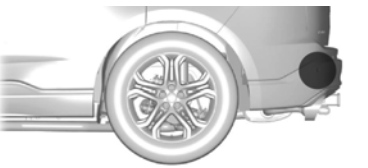

E205199

The sensors are behind the rear bumper on both sides of your vehicle.

Note: *Keep the sensors free from snow, ice and large accumulations of dirt.*

Transit (TTS) Vehicles Built From: 27-01-2020 Vehicles Built Up To: 20-09-2020, CG3796en enGBR, Edition date: 201911, First-Printing

Note: *Do not cover the sensors with bumper stickers, repair compound or other objects.*

Note: *Blocked sensors could affect system performance.*

If the sensors are blocked, a message may appear in the information display. The indicators remain illuminated in the exterior mirror but the system does not alert you.

Switching the Blind Spot Information System On and Off

1. Using the information display controls on the steering wheel, select ***Settings***.
2. Select ***Driver assistance***.
3. Select ***BLIS***.
4. Switch ***BLIS*** on or off.

When you switch the system off, a warning lamp illuminates in the instrument cluster and the alert indicators flash twice.

The system remembers the last setting when you start your vehicle.

Note: *The system may not correctly operate when towing a trailer. The system turns off when you attach a trailer, if your vehicle has an approved trailer tow module and tow bar. For vehicles with an aftermarket trailer tow module or tow bar, turn the system off when you attach a trailer.*

To permanently switch the system off, contact an authorized dealer.

Blind Spot Information System Indicator



When the system detects a vehicle, an alert indicator illuminates in the exterior mirror on the side the approaching vehicle is coming from. If you turn the direction indicator on for that side of your vehicle, the alert indicator flashes.

Note: *The system may not alert you if a vehicle quickly passes through the detection zone.*

Blind Spot Information System with Trailer Tow

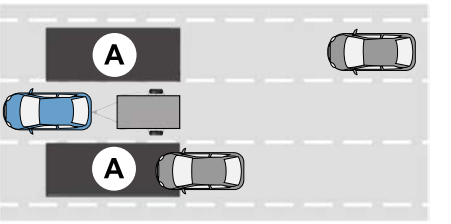

E293525

The blind spot information system with trailer tow is designed to detect vehicles that may have entered the blind spot zone. The detection area is on both sides of your vehicle and trailer, extending rearward from the exterior mirrors to the end of your trailer. When you attach a trailer and have set up a trailer, the blind spot information system with trailer tow becomes active when driving forward above 10 km/h (6 mph).

You can set up the trailer length, select a trailer or switch blind spot information system with trailer tow off.

Note: *The system remembers the last trailer setting when you start your vehicle.*

Transit (TTS) Vehicles Built From: 27-01-2020 Vehicles Built Up To: 20-09-2020, CG3796en enGBR, Edition date: 201911, First-Printing

Setting up the Trailer Length

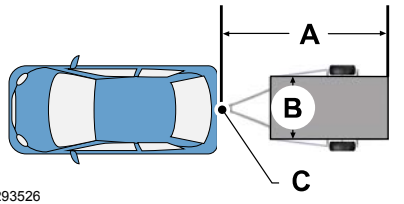

E293526

A Trailer length.
B Trailer width.
C Trailer hitch.

The system operates only if the trailer front width is less than 2.5 m (8.2 ft), and the total length from the trailer hitch to the rear of the trailer is less than 10 m (33 ft).

1. Using the information display controls on the steering wheel, select ***Settings***.
2. Select ***Driver assistance***.
3. Select ***BLIS***.
4. Select ***Trailer lengths***.
5. Select ***Trailer A***, ***Trailer B*** or ***Trailer C***.
6. Select the trailer length at the closest available value.

Note: *Proper measurement and measurement entry are required for the system to function as designed.*

7. Press the ***OK*** button.

Note: *If you attach load carriers such as bike racks or cargo racks with electrical lighting, enter a length of 1 m (3 ft). Cross Traffic Alert remains on.*

Selecting a Trailer

If you select a trailer in the information display prior to connecting a trailer, the system loads that configuration and an information message appears in the information display when you connect the trailer.

1. Using the information display controls on the steering wheel, select ***Settings***.
2. Select ***Driver assistance***.
3. Select ***BLIS***.
4. Select ***Trailer***.
5. Select ***Trailer A***, ***Trailer B*** or ***Trailer C***.
6. Press the ***OK*** button.

Switching the Blind Spot Information System with Trailer Tow Off

1. Using the information display controls on the steering wheel, select ***Settings***.
2. Select ***Driver assistance***.
3. Select ***BLIS***.
4. Select ***Trailer***.
5. Select ***None***.
6. Press the ***OK*** button.

When you switch the system off, a warning lamp illuminates and the alert indicators flash twice.

Note: *The system turns off and a message appears when a trailer is connected, but not set up or selected.*

Transit (TTS) Vehicles Built From: 27-01-2020 Vehicles Built Up To: 20-09-2020, CG3796en enGBR, Edition date: 201911, First-Printing

Blind Spot Information System Limitations

Some trailers may cause a slight change in system performance:

- Wide box trailers, especially those wider than the towing vehicle, may cause false alerts to occur when driving next to infrastructure or near parked cars. A false alert may also occur while making a 90-degree turn or driving through a roundabout.
- Wide trailers that have a total length greater than 6 m (20 ft) may cause delayed alerts when a vehicle is passing at high speed.
- Box trailers that have a width greater than 2.5 m (8.2 ft) may cause early alerts when you pass a vehicle.
- Clam shell or V-Nose box trailers with a width greater than 2.5 m (8.2 ft) may cause delayed alerts when a vehicle traveling the same speed as your vehicle merges lanes.

Blind Spot Information System Warning Lamp



It illuminates in the instrument cluster if you switch the system off.

If it illuminates when the system is on this indicates a malfunction. Have your vehicle checked as soon as possible.

Blind Spot Information System Information Messages

Message	Description
Trailer BLIS Add trailer Exit Press OK to select	Displays if the new trailer is attached but not selected. Select a trailer.
BLIS not available Sensor blocked See manual	Displays if the blind spot information system sensors are blocked.
BLIS and cross traffic alert deactivated Trailer attached	Displays if you attach a trailer to your vehicle.
BLIS malfunction	The system has detected a fault that requires service. Have your vehicle checked as soon as possible.

CROSS TRAFFIC ALERT

WARNING: Do not use the cross traffic alert system as a replacement for using the interior and exterior mirrors or looking over your shoulder before reversing out of a parking space. The cross traffic alert system is not a replacement for careful driving.

WARNING: The system may not operate properly during severe weather conditions, for example snow, ice, heavy rain and spray. Always drive with due care and attention. Failure to take care may result in a crash.

The system is designed to alert you of vehicles approaching from the sides behind your vehicle when you shift into reverse (R).

Transit (TTS) Vehicles Built From: 27-01-2020 Vehicles Built Up To: 20-09-2020, CG3796en enGBR, Edition date: 201911, First-Printing

Using Cross Traffic Alert

The system is designed to detect vehicles that approach at a speed between 6 km/h (4 mph) and 60 km/h (37 mph). Coverage decreases when the sensors are partially, mostly or fully obstructed. Slowly reversing helps increase the coverage area and effectiveness.

The system turns on when you start the engine and you shift into reverse (R). The system turns off when you shift out of reverse (R).

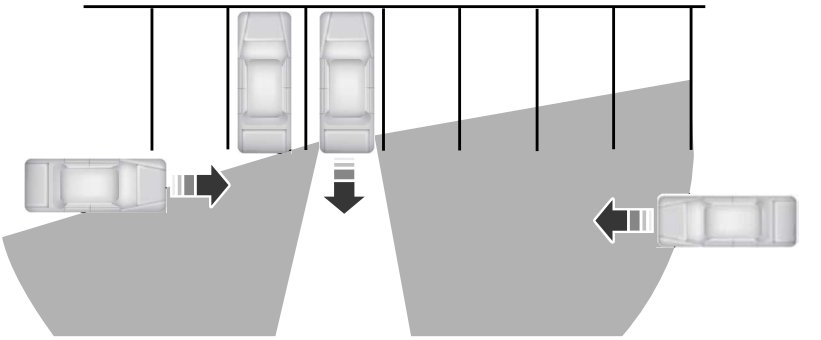

E142440

The sensor on the left-hand side is only partially obstructed and zone coverage on the right-hand side is maximized.

Transit (TTS) Vehicles Built From: 27-01-2020 Vehicles Built Up To: 20-09-2020, CG3796en enGBR, Edition date: 201911, First-Printing

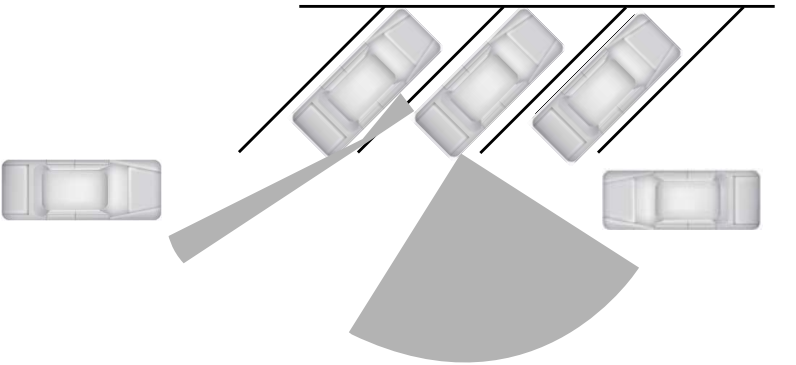

E142441

Zone coverage also decreases when parking at narrow angles. The sensor on the left-hand side is mostly obstructed and zone coverage on that side is severely reduced.

Cross Traffic Alert System Sensors

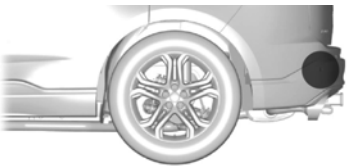

E205199

The sensors are behind the rear bumper on both sides of your vehicle.

Note: *Keep the sensors free from snow, ice and large accumulations of dirt.*

Note: *Do not cover the sensors with bumper stickers, repair compound or other objects.*

Note: *Blocked sensors could affect system performance.*

If the sensors are blocked, a message may appear in the information display when you shift into reverse (R).

Cross Traffic Alert System Limitations

The system may not correctly operate when any of the following occur:

- The sensors are blocked.
- Adjacently parked vehicles or objects are obstructing the sensors.
- Vehicles approach at speeds less than 6 km/h (4 mph) or greater than 60 km/h (37 mph).
- The vehicle speed is greater than 12 km/h (7 mph).
- You reverse out of an angled parking space.

Transit (TTS) Vehicles Built From: 27-01-2020 Vehicles Built Up To: 20-09-2020, CG3796en enGBR, Edition date: 201911, First-Printing

Cross Traffic Alert behavior when trailer is attached

Note: *The system may not correctly operate when towing a trailer. For vehicles with an approved trailer tow module and tow bar, the system turns off when you attach a trailer. For vehicles with an aftermarket trailer tow module or tow bar, we recommend that you switch the system off when you attach a trailer.*

Cross traffic alert remains on when you attach a trailer in vehicles equipped with a Blind Sport Information System with Trailer Tow under the following conditions:

- You connect a trailer.
- The trailer is a bike rack or cargo rack with a maximum length of 1 m (3 ft).
- You set the trailer length to 1 m (3 ft) in the information display.

See **Blind Spot Information System** (page 197).

Switching the System On and Off

To switch cross traffic alert on or off, use the Information display. See **General Information** (page 89).

Note: *The system turns on every time you switch the ignition on. To permanently switch the system off, contact an authorized dealer.*

Cross Traffic Alert Indicator



When the system detects an approaching vehicle a tone sounds, a warning lamp illuminates in the relevant exterior mirror and arrows appear in the information display to show which side the approaching vehicle is coming from.

Note: *If arrows do not display, a message appears in the information display.*

If the system malfunctions, a warning lamp illuminates in the instrument cluster and a message appears in the information display. Have your vehicle checked as soon as possible.

Note: *In exceptional conditions, the system could alert you, even when there is nothing in the detection zone, for example a vehicle passing further away from your vehicle.*

Cross Traffic Alert Information Messages

Message	Action
Cross traffic alert	Displays instead of indication arrows when the system detects a vehicle. Check for approaching traffic.
Cross traffic not available Sensor blocked See manual	Displays if the cross traffic alert system sensors are blocked. Clean the sensors. If the message continues to appear, have your vehicle checked as soon as possible.
Cross traffic malfunction	The system has malfunctioned. Have your vehicle checked as soon as possible.
Cross traffic alert deactivated Trailer attached	Displays if you attach a trailer to your vehicle.

Transit (TTS) Vehicles Built From: 27-01-2020 Vehicles Built Up To: 20-09-2020, CG3796en enGBR, Edition date: 201911, First-Printing

TRAFFIC SIGN RECOGNITION

Principle of Operation

WARNING: You are responsible for controlling your vehicle at all times. The system is designed to be an aid and does not relieve you of your responsibility to drive with due care and attention. Failure to follow this instruction could result in the loss of control of your vehicle, personal injury or death.

WARNING: The system may not operate properly if the sensor is blocked. Keep the windshield free from obstruction.

The system is designed to detect traffic signs to inform you of the current speed limit and overtaking regulations. Detected traffic signs appear in the information display. The sensor is behind the interior mirror.

Note: *Do not carry out windshield repairs in the immediate area surrounding the sensor.*

Note: *Traffic sign data provided by the navigation system contains information integrated to the data carrier release.*

The system detects recognizable traffic signs, for example:

- Speed limit signs.
- No overtaking signs.
- Speed limit cancellation signs.
- No overtaking cancellation signs.

Note: *The system may not detect all traffic signs and may incorrectly read signs.*

Note: *In cold and severe weather conditions the system may not function. Rain, snow, spray and large contrasts in lighting can all prevent the sensor from correctly functioning.*

Note: *If your vehicle has a suspension kit not approved by us, the system may not correctly function.*

Note: *Always fit Ford original parts when replacing headlamp bulbs. Other bulbs may reduce system performance.*

The system turns on when you switch the ignition on and you cannot switch the system off.

Using Traffic Sign Recognition

Setting the System Speed Warning

You can set the system speed warning to alert you when the vehicle speed exceeds the speed limit recognized by the system by a certain speed tolerance.

To switch the system speed warning on or off, or to adjust the speed warning settings, use the information display controls on the steering wheel to select the following:

Menu Item	Action
Driver assist.	Press the menu button.
Traffic sign recognition	Press the ***OK*** button.
Activate speed warning	Press the ***OK*** button.

Transit (TTS) Vehicles Built From: 27-01-2020 Vehicles Built Up To: 20-09-2020, CG3796en enGBR, Edition date: 201911, First-Printing

Menu Item	Action
Speed warning	Press the menu button.
Tolerance	Press the ***OK*** button. Press the toggle button upward or downward to choose your required speed setting. Press the ***OK*** button.
Overspeed chime	Press the ***OK*** button.

Traffic Sign Recognition System Display



E132994

The system can display two traffic signs in parallel.

You can view the status at any time using the information display.

The system displays recognizable traffic signs in four stages as follows:

1. All new traffic signs appear brighter than the others in the display.
2. After a predetermined time they display normally.
3. After a predetermined distance they are greyed out.
4. After another predetermined distance they are deleted.

If the system detects a supplementary traffic sign, it displays below the respective traffic sign. For example, when passing a reduced speed limit in wet road conditions sign.

Note: *If your vehicle has a navigation system, stored traffic sign data may influence the indicated speed limit value.*

Traffic Sign Recognition System Messages

Message	Action
Traffic sign recognition Reduced performance See manual	The traffic sign data provided by the navigation system is unavailable due to weak or no signal. Wait for a short period of time for the signal to improve. If the message continues to appear, have your vehicle checked as soon as possible.

Transit (TTS) Vehicles Built From: 27-01-2020 Vehicles Built Up To: 20-09-2020, CG3796en enGBR, Edition date: 201911, First-Printing

WRONG WAY ALERT

WARNING: The system is designed to aid the driver. It is not intended to replace your attention and judgment. You are still responsible to drive with due care and attention.

WARNING: At all times, you are responsible for controlling your vehicle, supervising the system and intervening, if required. Failure to take care may result in the loss of control of your vehicle, serious personal injury or death.

WARNING: The system may not operate properly if the sensor is blocked. Keep the windshield free from obstruction.

The system is designed to alert you if it detects that you are driving the wrong way on a freeway exit road. The system uses a sensor behind the interior mirror to detect no entry signs and uses information from the navigation system.

Note: *Do not carry out windshield repairs in the immediate area surrounding the sensor.*

Note: *Traffic sign data provided by the navigation system contains information integrated to the data carrier release.*

Note: *The system is designed to detect traffic signs meeting the Vienna convention.*

Note: *The system may not detect all traffic signs and may incorrectly read signs.*

Note: *If your vehicle has a suspension kit not approved by us, the system may not correctly function.*

Note: *Always fit Ford original parts when replacing headlamp bulbs. Other bulbs may reduce system performance.*

Note: *The system does not operate in some countries. We recommend that you check system availability before use.*

If the system detects that you are driving the wrong way on a freeway exit road, a message appears in the information display and a tone sounds. The audio system volume mutes and navigation system guidance pauses.

Note: *In cold and severe weather conditions the system may not function. Rain, snow, spray and large contrasts in lighting can all prevent the sensor from functioning correctly.*

Note: *The system may not correctly operate in areas under construction or new infrastructure.*

Note: *In exceptional conditions, the system could alert you even if you are not driving the wrong way on a freeway exit road.*

Switching Wrong Way Alert On or Off

To switch wrong way alert on or off, use the information display controls on the steering wheel to select the following:

Menu Item	Action
Driver assist.	Press the menu button.
Wrong way alert	Press the ***OK*** button.

Note: *The system remembers the last setting when you start your vehicle.*

Transit (TTS) Vehicles Built From: 27-01-2020 Vehicles Built Up To: 20-09-2020, CG3796en enGBR, Edition date: 201911, First-Printing

Wrong Way Alert Information Messages

Message	Action
Check driving direction	The system has detected that you are driving the wrong way on a freeway exit road. Press the ***OK*** button.

ECO

Eco Mode

How Does Eco Mode Work

The system is designed to monitor certain driving characteristics to help you drive more efficiently. See **Economical Driving** (page 224).

Note: *The efficiency levels do not result in a defined fuel consumption figure. See **Fuel Consumption** (page 139).*

Note: *The system only indicates the efficiency level for the current trip. The system resets each time you switch the ignition on.*

Instantaneous Efficiency Level

The display ring increases as the instantaneous efficiency level increases and illuminates when it reaches maximum efficiency. The level continuously updates to indicate the efficiency level for the current trip.

Viewing the Instantaneous Efficiency Level

1. Using the information display controls on the steering wheel, select ***MyView***.
2. Select ***Eco coach***.

Trip Summary

The calculated trip summary is shown as four colored bars. The bars travel from left to right as the calculated efficiency levels increase. The bars indicate the average efficiency level for acceleration, deceleration, speed and gear shifting during the total distance traveled by your vehicle for the current trip.

Note: *Vehicles with an automatic transmission do not have a bar for gear shifting.*

Viewing the Trip Summary

1. Using the information display controls on the steering wheel, select ***MyView***.
2. Select ***Eco coach***.

Efficient Drive Mode

What Is Efficient Drive Mode

Efficient drive mode is a predictive coach that provides near real-time traffic information to help you drive more efficiently by releasing the accelerator pedal.

Switching Efficient Drive Mode On and Off

1. Using the information display controls on the steering wheel, select ***Driver assist.***.
2. Select ***Eco coach***.
3. Switch ***Eco advice*** on and off.

Transit (TTS) Vehicles Built From: 27-01-2020 Vehicles Built Up To: 20-09-2020, CG3796en enGBR, Edition date: 201911, First-Printing

Displaying the Efficient Drive Mode

1. Using the information display controls on the steering wheel, select ***Driver assist.***.

The display ring can provide information about speed limit, freeway ramp, slope, curve, crosswalk, etc.

Efficient Drive Mode Indicator



It indicates that you have to slowly decelerate.

Trip Summary

The calculated trip summary is shown as five colored bars. The bars travel from left to right as the calculated efficiency levels increase. The bars indicate the average efficiency level for acceleration, deceleration, speed, gear shifting and compliance score during the total distance traveled by your vehicle for both last and current trips.

Note: *Vehicles with an automatic transmission do not have a bar for gear shifting.*

Viewing the trip summary

1. Using the information display controls on the steering wheel, select ***MyView***.
2. Select ***Eco coach***.
3. Switch the engine off.
4. Press the ***OK*** button.

PRE-COLLISION ASSIST

WARNING: You are responsible for controlling your vehicle at all times. The system is designed to be an aid and does not relieve you of your responsibility to drive with due care and attention. Failure to follow this instruction could result in the loss of control of your vehicle, personal injury or death.

WARNING: The system does not operate during hard acceleration or steering. Failure to take care may lead to a crash or personal injury.

WARNING: The system may fail or operate with reduced function during cold and severe weather conditions. Snow, ice, rain, spray and fog can adversely affect the system. Keep the front camera and radar free of snow and ice. Failure to take care may result in the loss of control of your vehicle, serious personal injury or death.

WARNING: The system may not operate properly if your vehicle has a non-Ford windshield. Do not carry out windshield repairs in the area around the sensor.

WARNING: Some situations and objects prevent hazard detection. For example low or direct sunlight, inclement weather, unconventional vehicle types, and pedestrians. Apply the brakes when necessary. Failure to follow this instruction could result in the loss of control of your vehicle, personal injury or death.

Transit (TTS) Vehicles Built From: 27-01-2020 Vehicles Built Up To: 20-09-2020, CG3796en enGBR, Edition date: 201911, First-Printing

WARNING: The Pre-Collision Assist system with brake support cannot help prevent all collisions. Do not rely on this system to replace your judgment and the need to maintain correct distance and speed.

The pre-collision assist system is active when your vehicle reaches a speed greater than approximately 10 km/h (6 mph). Pedestrian detection is active at speeds up to 80 km/h (50 mph).

Note: *The system is not designed to detect animals.*

Note: *The system is not designed to detect vehicles or cyclists that are traveling in a different direction.*

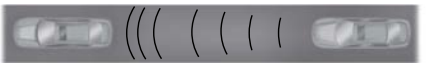
E156130

If your vehicle is rapidly approaching another stationary vehicle, a vehicle or cyclist traveling in the same direction as yours, or a pedestrian within your driving path, the system is designed to provide three levels of functionality.

Level of Functionality	Description
Alert	When activated, a warning lamp flashes and an audible warning sounds.
Brake support	The system is designed to help reduce the impact speed by preparing the brakes for rapid braking. The system does not automatically apply the brakes. If you press the brake pedal, the system could apply additional braking up to maximum braking force, even if you lightly press the brake pedal.
Active braking	The system is designed to apply the brakes if it detects a crash is imminent. This may help reduce impact or avoid the crash.

Switching Active Braking On and Off

1. Using the information display controls on the steering wheel, select ***Driver assist.***.
2. Select ***Pre-collision Assist***.
3. Switch ***Active braking*** on or off.

Distance Alert (If Equipped)

A warning lamp illuminates if the distance to the vehicle ahead is small.

Note: *The warning lamp does not illuminate if cruise control or adaptive cruise control is active.*

Adjusting the Sensitivity of Distance Alert

1. Using the information display controls on the steering wheel, select ***Driver assist.***.
2. Select ***Pre-collision Assist***.
3. Select ***Alert sensitivity***.
4. Select a setting and press the ***OK*** button.

Transit (TTS) Vehicles Built From: 27-01-2020 Vehicles Built Up To: 20-09-2020, CG3796en enGBR, Edition date: 201911, First-Printing

Distance Indication (If Equipped)

A graphical indication displays the time gap to vehicles ahead of you traveling in the same direction.

Note: *The graphic does not display if you switch on cruise control or adaptive cruise control.*

Vehicle Speed	System Sensitivity	Distance Indicator Color	Distance Gap	Time Gap
100 km/h (62 mph)	Normal.	Gray.	Greater than 25 m (82.0 ft) .	Greater than 0.9 seconds.
		Yellow.	17–25 m (55.8–82.0 ft)	0.6-0.9 seconds.
		Red.	Less than 17 m (55.8 ft).	Less than 0.6 seconds.

Switching Distance Indication On and Off

1. Using the information display controls on the steering wheel, select ***Driver assist.***.
2. Select ***Pre-collision Assist***.
3. Switch ***Distance indication*** on or off.

Pre-Collision Assist System Sensors

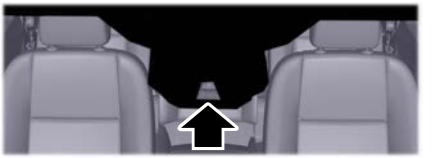

E243054

The camera is mounted behind the interior mirror.

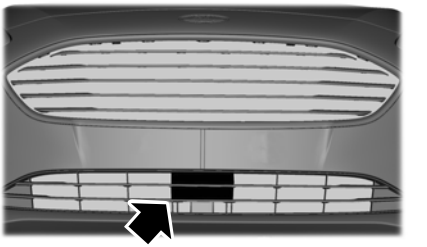

E244279

The radar sensor is behind the front grille below the license plate.

Note: *Keep the sensors free from snow, ice and large accumulations of dirt.*

Note: *Do not clean the sensors with sharp objects.*

Note: *If your vehicle sustains damage leaving the sensors misaligned, this may cause inaccurate measurements or false alerts.*

Blocked sensors could affect system accuracy. A message may appear in the information display.

Transit (TTS) Vehicles Built From: 27-01-2020 Vehicles Built Up To: 20-09-2020, CG3796en enGBR, Edition date: 201911, First-Printing

Pre-Collision Assist Warning Lamp



It illuminates if your vehicle rapidly approaches another vehicle, to warn you of the risk of a crash with the vehicle in front of you. It could illuminate red if the distance to the vehicle ahead is small.

It illuminates amber when you switch the system off or if the system is not available.

Pre-Collision Assist Information Messages

Message	Action
Pre-collision assist not available	The system has malfunctioned. Have your vehicle checked as soon as possible.
Pre-collision assist not available Sensor blocked	The sensors are dirty. Clean the sensors. If the message continues to appear, have your vehicle checked as soon as possible.

The following table lists possible causes and actions for when a blocked sensor message may display.

Cause	Action
The surface of the radar in the radiator grille is dirty or obstructed.	Clean the radiator grille in front of the radar or remove any obstruction.
The surface of the radar is clean but the message remains in the display.	Wait for a short period of time. It may take several minutes for the system to detect that there is no obstruction.
Heavy rain, spray, snow, or fog is interfering with the radar signals.	The system is temporarily disabled. The system should reactivate after a short period of time when the weather conditions improve.
The radar is misaligned.	Have your vehicle checked as soon as possible.
The windshield in front of the camera is dirty or obstructed.	Clean the outside of the windshield in front of the camera.
The windshield in front of the camera is clean but the message remains in the display.	Wait for a short period of time. It may take several minutes for the camera to detect that there is no obstruction.
Excessive heat around the camera.	Wait for a short period of time. The message should clear when the temperature around the camera decreases.

Transit (TTS) Vehicles Built From: 27-01-2020 Vehicles Built Up To: 20-09-2020, CG3796en enGBR, Edition date: 201911, First-Printing

FRONT VIEW CAMERA

WARNING: The front camera system still requires the driver to use it in conjunction with looking out of your vehicle.

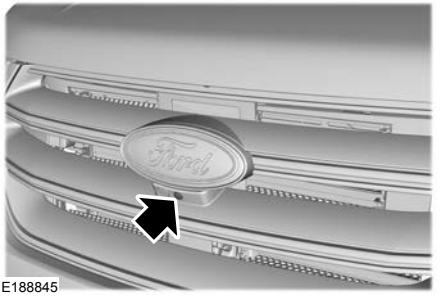

The front view camera is located in the grille.

Using the Front View Camera

The front view camera provides a video image of the area in front of your vehicle.

To use the front view camera system, place the transmission in any gear except reverse (R). An image of the front of your vehicle appears once you press the camera enable button and your vehicle speed is below 10 km/h (6 mph).

Note: *The area displayed on the screen may vary according to your vehicle's orientation or road condition.*

Note: *The front view camera will switch off if your vehicle speed exceeds 10 km/h (6 mph). You will have to switch the system back on by using the enable button once below the speed threshold.*

Note: *The camera system may not operate correctly if mud, water or debris obstructs the camera's view. You can clean the lens with a soft, lint-free cloth and non-abrasive cleaner or by using your front washer. See* ***Wipers and Washers*** *(page 66).*



The camera button is located on the audio unit.

Camera Views

Press the camera button to toggle between different views.

- Front Normal View: Provides an image of what is directly in front of your vehicle.
- Front Split View: Provides an extended view of what is in front of your vehicle. Access this view by pressing the camera button from the Front Normal View screen.

DRIVE CONTROL

Selectable Drive Modes

Your vehicle has various drive modes that you can select for different driving conditions. Depending on the drive mode that you select, the system adjusts various vehicle settings, for example steering, gear shifting, handling and powertrain response.

Selecting a Drive Mode

The button is on the instrument panel.



Repeatedly press the button to scroll through the available drive modes. Release the button to confirm your selected drive mode.

Normal



Vehicle settings suited for balanced driving.

Transit (TTS) Vehicles Built From: 27-01-2020 Vehicles Built Up To: 20-09-2020, CG3796en enGBR, Edition date: 201911, First-Printing

Note: *This is the default mode each time you switch the ignition on.*

Eco



Vehicle settings suited for economical driving.

Slippery



Vehicle settings suited for driving on slippery roads.

Tow/Haul



Vehicle settings suited for towing or hauling.

Mud/Ruts



Vehicle settings suited for driving through mud and ruts.

Selectable Drive Modes Information Messages

Message	Action
Drive mode not available	The system is not available. If it is still not available the next time you switch the ignition on, the system has detected a fault that requires service. Have your vehicle checked as soon as possible.

Transit (TTS) Vehicles Built From: 27-01-2020 Vehicles Built Up To: 20-09-2020, CG3796en enGBR, Edition date: 201911, First-Printing

GENERAL INFORMATION

WARNING: Use load securing straps to an approved standard, e.g. DIN.

WARNING: Make sure that you secure all loose items properly.

WARNING: Place luggage and other loads as low and as far forward as possible within the luggage or loadspace.

WARNING: Do not exceed the maximum front and rear axle loads for your vehicle.

WARNING: Do not exceed the maximum gross vehicle weight. See **Vehicle Identification Plate** (page 306).

WARNING: Do not place solid objects outside the loadspace area for example timber and sheet material.

Note: *The center of the payload should be located within the wheelbase of the vehicle.*

Note: *Avoid one sided load distribution.*

Note: *Uneven load distribution could result in unacceptable handling and braking characteristics.*

LUGGAGE COVERS

WARNING: Do not move your vehicle with people or animals in the loadspace.

WARNING: The maximum load per rope hook is 200 kg (440 lb). Do not exceed this load.

Note: *You must secure the loads carried in the loadspace.*

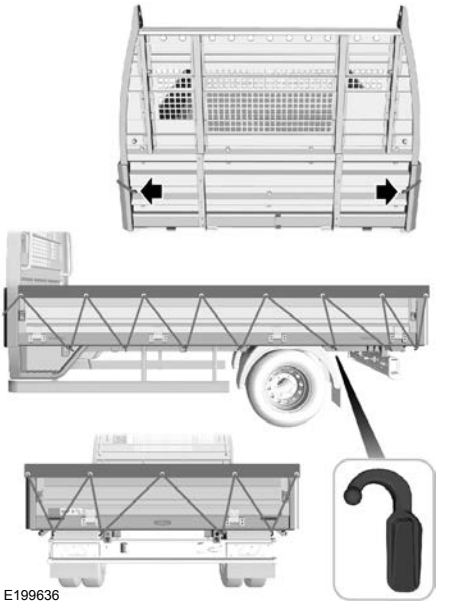
E199636

When transporting loads for example sand, gravel, soil, use a cover to prevent items falling out of your vehicle.

Transit (TTS) Vehicles Built From: 27-01-2020 Vehicles Built Up To: 20-09-2020, CG3796en enGBR, Edition date: 201911, First-Printing

ROOF RACKS AND LOAD CARRIERS - BUS

WARNING: When loading the roof racks, we recommend you evenly distribute the load, as well as maintain a low center of gravity. Loaded vehicles, with higher centers of gravity, may handle differently than unloaded vehicles. Take extra precautions, such as slower speeds and increased stopping distance, when driving a heavily loaded vehicle.

WARNING: Do not exceed the maximum front and rear axle loads for your vehicle.

WARNING: Read and follow the manufacturer's instructions when you are fitting a roof rack.

Maximum Roof Load

Variant	kg (lb)
Medium-Roof.	150 (331)
High-Roof.	100 (220)

Make sure that you securely fasten the load. Check that the straps are secure before driving and at each fuel stop.

We recommend that you use genuine Ford accessory crossbars specifically designed for your vehicle.

Never place loads directly on the roof panel.

ROOF RACKS AND LOAD CARRIERS - VAN

WARNING: When loading the roof racks, we recommend you evenly distribute the load, as well as maintain a low center of gravity. Loaded vehicles, with higher centers of gravity, may handle differently than unloaded vehicles. Take extra precautions, such as slower speeds and increased stopping distance, when driving a heavily loaded vehicle.

WARNING: Do not exceed the maximum front and rear axle loads for your vehicle.

WARNING: Read and follow the manufacturer's instructions when you are fitting a roof rack.

All Except 310M M1 Kombi With Passenger Double Seat, Second Row Seats & Third Row Seats.

Variant	Maximum Roof Load kg (lb)
Medium-Roof.	150 (331)
High-Roof.	100 (220)

310M M1 Kombi With Passenger Double Seat, Second Row Seats & Third Row Seats.

Variant	Maximum Roof Load kg (lb)
Medium-Roof.	100 (220)
High-Roof.	50 (110)

Make sure that you securely fasten the load. Check that the straps are secure before driving and at each fuel stop.

Transit (TTS) Vehicles Built From: 27-01-2020 Vehicles Built Up To: 20-09-2020, CG3796en enGBR, Edition date: 201911, First-Printing

We recommend that you use genuine Ford accessory crossbars specifically designed for your vehicle.

Never place loads directly on the roof panel.

LOAD RETAINING FIXTURES

Tie Down Points

WARNING: Use the tie down points only for restraining the loads within the loadspace. Using tie down points for any other purpose may lead to serious injury or vehicle damage. Do not use the tie down points for towing.

WARNING: A loaded vehicle alters the vehicle's center of gravity and aerodynamics. Take care when cornering, driving in crosswinds and at high speeds.

WARNING: Do not exceed the permissible gross weight. See **Vehicle Identification Plate** (page 306).

WARNING: Each tie down point has a maximum load rating. See table below. Exceeding this may lead to serious injury and vehicle damage.

WARNING: Always inspect the tie down points before use.

WARNING: Make sure that you secure all loose items properly.

Van

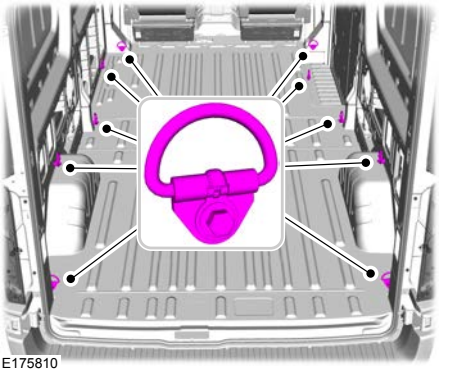

E175810

Variant	Maximum Load Value
All Van	5,000 N (1,125 lb)

Dropside

Note: *The number of tie down points may vary depending on your vehicle model.*

Do not use the tie down points under the following conditions:

- Any sign of wear or damage.
- Rail supporting the tie down points show any sign of wear, damage or distortion.

Transit (TTS) Vehicles Built From: 27-01-2020 Vehicles Built Up To: 20-09-2020, CG3796en enGBR, Edition date: 201911, First-Printing

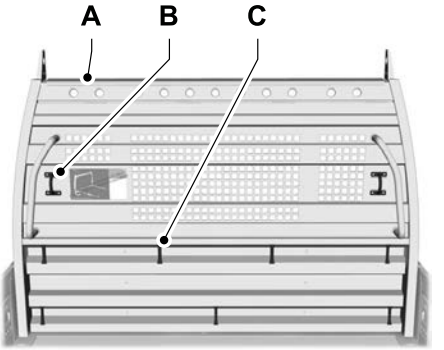

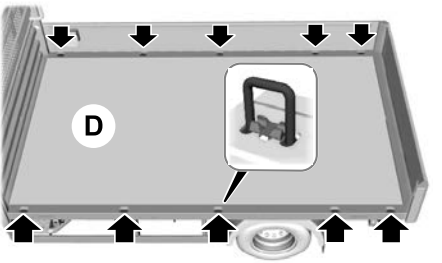

E199710

Basic 3.5 Tonne

Load Retaining Fixtures	Maximum Load kg (lb)
A	450 kg (990 lb)
B	500 kg (1,100 lb)
C	450 kg (990 lb)
D	400 kg (880 lb)

Premium 3.5 and 4.7 Tonne

Load Retaining Fixtures	Maximum Load kg (lb)
A	450 kg (990 lb)
B	1,000 kg (2,200 lb)
C	450 kg (990 lb)
D	800 kg (1,760 lb)

TAILGATE

WARNING: Do not exceed the maximum permissible tailgate load of 150 kg (331 lb).

WARNING: Do not drive your vehicle with the tailgate in the lowered position.

WARNING: Make sure that you keep a firm grip of the tailgate to prevent it from dropping down.

Note: *Lower the tailgate for better access to loads.*

Note: *When closing the tailgate remove all debris between the tailgate and loadspace.*

Note: *Use the warning triangle when lowering the tailgate.*

Transit (TTS) Vehicles Built From: 27-01-2020 Vehicles Built Up To: 20-09-2020, CG3796en enGBR, Edition date: 201911, First-Printing

Lowering the Tailgate

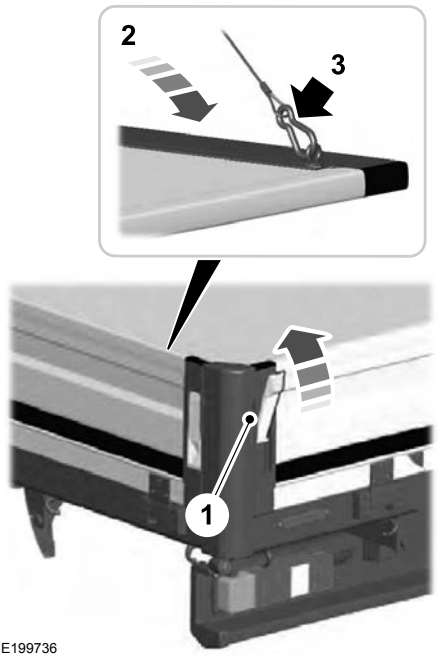

E199736

1. Push the top of the tailgate and push the latch up.
2. Lower the tailgate slightly.
3. Release both support cables from the tailgate.
4. Lower the tailgate.

BED ACCESS

WARNING: Make sure that you keep a firm grip of the side panel to prevent it from dropping down.

Note: *We recommend using the foot tread plate, when there is a possibility of load spillage.*

Note: *Lower the side panel for better access to loads.*

Opening the Side Panel

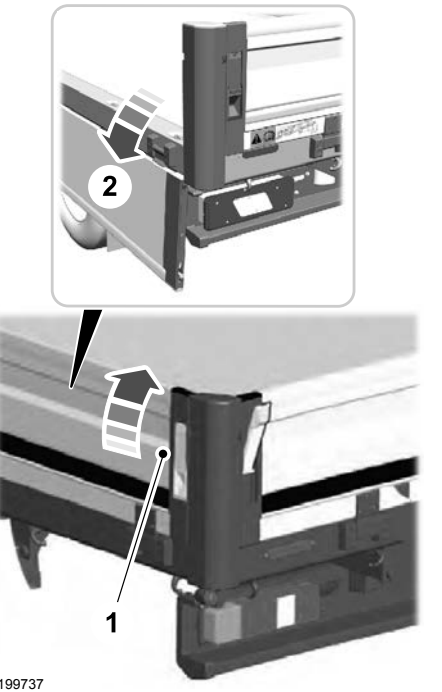

E199737

1. Push the top of the side panel and pull the latch up.
2. Pull to open the side panel.

Transit (TTS) Vehicles Built From: 27-01-2020 Vehicles Built Up To: 20-09-2020, CG3796en enGBR, Edition date: 201911, First-Printing

Accessing the Load Bed (If Equipped)

Using the Folding Tread Plate

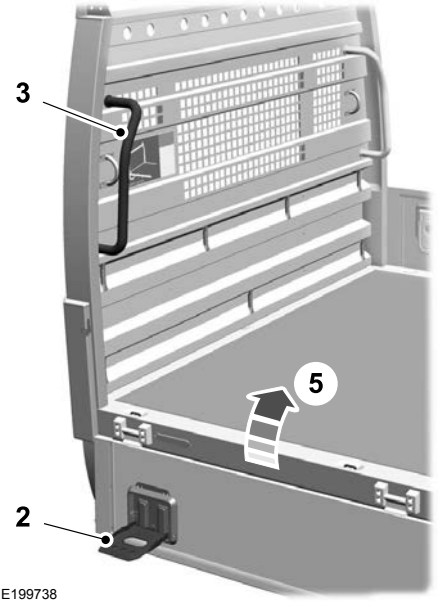

E199738

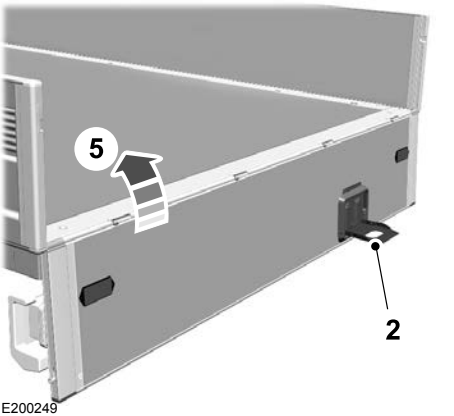

E200249

1. Lower the side panel or tailgate.
2. Lower the tread plate.
3. Hold the grab handle.
4. Place foot onto the tread plate.
5. Climb onto the load bed.

Dismount the load bed in reverse order.

Transit (TTS) Vehicles Built From: 27-01-2020 Vehicles Built Up To: 20-09-2020, CG3796en enGBR, Edition date: 201911, First-Printing

Using the Foot Tread Plate

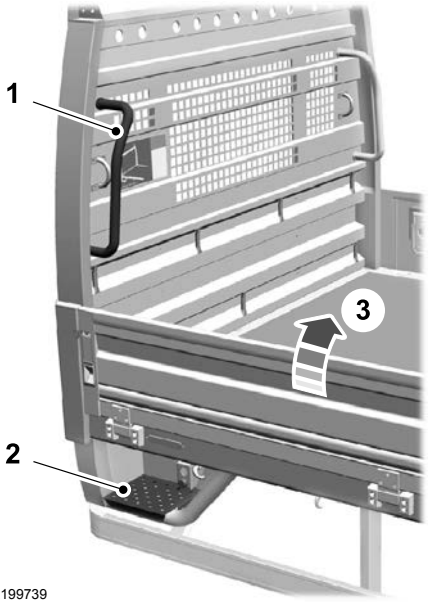

E199739

1. Hold the grab handle.
2. Place foot onto the tread plate.
3. Climb onto the load bed.

Dismount the load bed in reverse order.

Transit (TTS) Vehicles Built From: 27-01-2020 Vehicles Built Up To: 20-09-2020, CG3796en enGBR, Edition date: 201911, First-Printing

TOWING A TRAILER

WARNING: Do not exceed 100 km/h (62 mph). This could result in the loss of vehicle control, serious personal injury or death.

WARNING: Do not exceed the maximum gross train weight stated on your vehicle identification plate. This could result in the loss of vehicle control, serious personal injury or death. See **Vehicle Identification Plate** (page 306).

WARNING: Do not exceed the maximum permissible trailer nose weight (vertical weight on the tow ball) as stated in the vehicle specification chart. This could result in the loss of vehicle control, serious personal injury or death. See **Capacities and Specifications** (page 298).

WARNING: The anti-lock braking system does not control the overrun brake on the trailer. This could result in the loss of vehicle control, serious personal injury or death.

When towing a trailer:

- Obey country specific regulations for towing a trailer.
- Do not exceed 100 km/h (62 mph) even if a country allows higher speeds under certain conditions.
- Place loads as low as possible and central to the axle of your trailer. If you are towing with an unladen vehicle, the load in your trailer should be placed toward the nose, within the maximum nose load, as this gives the best stability. See **Capacities and Specifications** (page 298).
- The trailer nose weight (vertical weight on the tow ball), is essential for the driving stability of your vehicle and trailer.
- The vertical weight on the tow ball should be at least 4% of the trailer weight and not exceed the maximum permissable weight. See **Capacities and Specifications** (page 298).
- Reduce speed immediately if the trailer shows any sign of swaying. See **Trailer Sway Control** (page 222).
- Use a low gear when descending a steep downhill gradient.

Note: *The maximum permissible trailer nose weight on the trailer identification plate is the trailer manufacturer's testing value. The vehicle maximum permissible trailer nose weight may be lower.*

The stability of your vehicle to trailer combination is very much dependent on the quality of the trailer.

Towing a trailer changes the vehicle handling characteristics and increases stopping distances. Adapt your speed and driving behavior to the load of the trailer.

The gross train weight stated on the vehicle identification plate applies for road gradients up to 12% and altitudes up to 1,000 m (3,281 ft) when towing a trailer. In mountainous regions the engine performance decreases due to lower air density with increasing altitude. In high altitude regions above 1,000 m (3,281 ft), the stipulated maximum permitted gross train weight must be reduced by 10% for every extra 1,000 m (3,281 ft).

Note: *Not all vehicles are suitable or approved to have tow bars fitted. See an authorized dealer for further information.*

Trailer Lighting

The electrical system on your vehicle is suitable for towing trailers with LED lamps.

Transit (TTS) Vehicles Built From: 27-01-2020 Vehicles Built Up To: 20-09-2020, CG3796en enGBR, Edition date: 201911, First-Printing

TRAILER SWAY CONTROL

Note: *This feature does not prevent trailer sway, but reduces it once it begins.*

Note: *This feature cannot stop all trailers from swaying.*

Note: *In some cases, if your vehicle speed is too high, the system may turn on multiple times, gradually reducing your vehicle speed.*

This feature applies your vehicle brakes at individual wheels and if necessary, reduces engine power. If the trailer begins to sway, the traction control warning lamp flashes and a message will appear in the information display. Slow your vehicle down, pull safely to the side of the road and check for correct load distribution. See **Load Carrying** (page 214).

TOW BALL

WARNING: Do not exceed the maximum gross train weight stated on your vehicle identification plate.

Make sure you fit a protector to the tailboard if equipped. This prevents damage from the towbar when the tailboard is lowered. Contact an authorized dealer.

TOWING THE VEHICLE ON FOUR WHEELS - AUTOMATIC TRANSMISSION

WARNING: You must switch the ignition on when your vehicle is being towed. Failure to follow this warning could seriously increase the risk of injury or death.

WARNING: If your vehicle has a steering wheel lock make sure the ignition is in the accessory or on position when being towed.

WARNING: You must make sure the transmission selector lever is placed in position **N**. Failure to follow this warning could damage the transmission and may lead to a crash or injury.

WARNING: The brake and steering assistance will not operate unless the engine is running. Press the brake pedal harder and be aware of increased stopping distances and heavier steering.

WARNING: Too much tension on a tow rope could cause damage to your vehicle or the vehicle that is towing.

WARNING: Do not tow your vehicle if the ambient temperature is below 0ºC (32ºF).

Emergency Towing

If your vehicle is disabled without access to wheel dollies, a car-hauling trailer, or a flatbed transport vehicle it can be flat-towed with all wheels on the ground.

You may do this under the following conditions:

- Your vehicle is facing forward so that it is towed in a forward direction.
- The transmission selector lever is placed in position **N**. If the transmission gear shift lever cannot be moved to position **N**, it may need to be overridden. See **Automatic Transmission** (page 149).
- Maximum speed is 50 km/h (31 mph).
- Maximum distance is 80 km (50 mi).

Transit (TTS) Vehicles Built From: 27-01-2020 Vehicles Built Up To: 20-09-2020, CG3796en enGBR, Edition date: 201911, First-Printing

Drive off slowly and smoothly without jerking the vehicle you are towing.

You must only use the recovery hook that was delivered with your vehicle. See **Towing Points** (page 230).

Tow ropes or rigid towing bars must be placed on the same side. For example; right hand rear towing point to right hand front towing point.

You must use a tow rope or rigid towing bar that is of the correct strength for the weight of the towing vehicle and the vehicle that is being towed.

Note: *Using a rigid towing bar is the safest way to tow a vehicle.*

The weight of the vehicle that is being towed must not exceed the weight of the towing vehicle.

TOWING THE VEHICLE ON FOUR WHEELS - MANUAL TRANSMISSION

WARNING: You must switch the ignition on when your vehicle is being towed. Failure to follow this warning could seriously increase the risk of injury or death.

WARNING: The brake and steering assistance will not operate unless the engine is running. Press the brake pedal harder and be aware of increased stopping distances and heavier steering.

WARNING: If your vehicle has a steering wheel lock make sure the ignition is in the accessory or on position when being towed.

WARNING: Too much tension on a tow rope could cause damage to your vehicle or the vehicle that is towing.

WARNING: When towing your vehicle you must select neutral. Failure to follow this warning could damage the transmission and may lead to a crash or injury.

Drive off slowly and smoothly without jerking the vehicle you are towing.

You must only use the towing eye that was delivered with your vehicle. See **Towing Points** (page 230).

Tow ropes or rigid towing bars must be placed on the same side. For example; right hand rear towing point to right hand front towing point.

You must use a tow rope or rigid towing bar that is of the correct strength for the weight of the towing vehicle and the vehicle that is being towed.

The weight of the vehicle that is being towed must not exceed the weight of the towing vehicle.

Do not exceed 50 km/h (31 mph).

Transit (TTS) Vehicles Built From: 27-01-2020 Vehicles Built Up To: 20-09-2020, CG3796en enGBR, Edition date: 201911, First-Printing

REDUCED ENGINE PERFORMANCE

WARNING: If you continue to drive your vehicle when the engine is overheating, the engine could stop without warning. Failure to follow this instruction could result in the loss of control of your vehicle.

If the engine coolant temperature gauge needle moves to the upper limit position, the engine is overheating. See **Gauges** (page 83).

You must only drive your vehicle for a short distance if the engine overheats. The distance you can travel depends on ambient temperature, vehicle load and terrain. The engine continues to operate with limited power for a short period of time.

If the engine temperature continues to rise, the fuel supply to the engine reduces. The air conditioning switches off and the engine cooling fan operates continually.

1. Gradually reduce your speed and stop your vehicle as soon as it is safe to do so.
2. Immediately switch the engine off to prevent severe engine damage.
3. Wait for the engine to cool down.
4. Check the coolant level. See **Engine Coolant Check** (page 254).
5. Have your vehicle checked as soon as possible.

ECONOMICAL DRIVING

The following helps to improve fuel consumption:

- Regularly check your tire pressures and make sure that they are inflated to the correct pressure. See **Tire Pressures** (page 290).
- Follow the recommended maintenance schedule and carry out the recommended checks.
- Plan your journey and check the traffic before you set off.
- Avoid idling the engine in cold weather or for extended periods. Start the engine only when you are ready to set off.
- Do not carry unnecessary weight in your vehicle as extra weight wastes fuel.
- Do not add unnecessary accessories to the exterior of your vehicle, for example running boards. If you use a roof rack, remember to fold it down or remove it when not in use.
- Drive smoothly, accelerate gently and anticipate the road ahead to avoid heavy braking.
- Switch off all electric systems when not in use, for example air conditioning. Make sure that you unplug any accessories from the auxiliary power points when not in use.

COLD WEATHER PRECAUTIONS

The functional operation of some components and systems can be affected at temperatures below -25ºC (-13ºF).

Transit (TTS) Vehicles Built From: 27-01-2020 Vehicles Built Up To: 20-09-2020, CG3796en enGBR, Edition date: 201911, First-Printing

BREAKING-IN

Tires

New tires need to be run-in for approximately 500 km (300 mi). During this time, you may experience different driving characteristics.

Brakes and Clutch

Avoid heavy use of the brakes and clutch if possible for the first 150 km (100 mi) in town and for the first 1,500 km (1,000 mi) on freeways.

Engine

Avoid driving too fast during the first 1,500 km (1,000 mi). Vary your speed frequently and change up through the gears early. Do not labor the engine.

Vehicles With a Diesel Engine

During the first 3,000 km (2,000 mi), you may notice a ticking sound when your vehicle slows down. This is due to adjustments of your new diesel engine and is normal.

DRIVING THROUGH WATER

WARNING: Do not drive through flowing or deep water as you may lose control of your vehicle.

Note: *Driving through standing water can cause vehicle damage.*

Note: *Engine damage can occur if water enters the air filter.*

Before driving through standing water, check the depth. Never drive through water that is higher than the bottom of the wheel hubs.

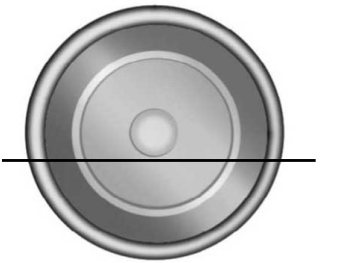

E176913

When driving through standing water, drive very slowly and do not stop your vehicle. Your brake performance and traction may be limited. After driving through water and as soon as it is safe to do so:

- Lightly press the brake pedal to dry the brakes and to check that they work.
- Check that the horn works.
- Check that the exterior lights work.
- Turn the steering wheel to check that the steering power assist works.

FLOOR MATS

WARNING: Use a floor mat designed to fit the footwell of your vehicle that does not obstruct the pedal area. Failure to follow this instruction could result in the loss of control of your vehicle, personal injury or death.

WARNING: Pedals that cannot move freely can cause loss of vehicle control and increase the risk of serious personal injury.

Transit (TTS) Vehicles Built From: 27-01-2020 Vehicles Built Up To: 20-09-2020, CG3796en enGBR, Edition date: 201911, First-Printing

WARNING: Secure the floor mat to both retention devices so that it cannot slip out of position and interfere with the pedals. Failure to follow this instruction could result in the loss of control of your vehicle, personal injury or death.

WARNING: Do not place additional floor mats or any other covering on top of the original floor mats. This could result in the floor mat interfering with the operation of the pedals. Failure to follow this instruction could result in the loss of control of your vehicle, personal injury or death.

WARNING: Always make sure that objects cannot fall into the driver foot well while your vehicle is moving. Objects that are loose can become trapped under the pedals causing a loss of vehicle control.


E142666

To install the floor mats, position the floor mat eyelet over the retention post and press down to lock in position.

To remove the floor mat, reverse the installation procedure.

Note: *Regularly check the floor mats to make sure they are secure.*

Transit (TTS) Vehicles Built From: 27-01-2020 Vehicles Built Up To: 20-09-2020, CG3796en enGBR, Edition date: 201911, First-Printing

HAZARD FLASHERS



The hazard flasher switch is on the instrument panel.

Use the hazard flashers if your vehicle is creating a safety hazard for other road users.

Switching the Hazard Flashers On or Off



Press the button to switch the hazard flashers on.

Press the button again to switch the hazard flashers off.

Note: *All direction indicators flash.*

Note: *Prolonged use of the hazard flashers could cause the vehicle battery to run out of charge.*

Note: *Depending on applicable laws in the country your vehicle was built for, if you heavily brake, the hazard flashers could turn on.*

Hazard Flasher Indicator

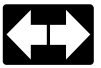

Flashes when you switch the hazard flashers on.

EMERGENCY EXIT

WARNING: Make sure that the roof rack and its load do not obstruct the emergency exit. Ask your dealer for advice on roof racks suitable for your vehicle.

Break the glass with the hammer in an emergency.

FUEL SHUTOFF

WARNING: If your vehicle has been involved in a crash, have the fuel system checked. Failure to follow this instruction could result in fire, personal injury or death.

In the event of a moderate to severe crash, your vehicle is fitted with a fuel pump shut-off feature that stops the flow of fuel to the engine. Not every impact will cause a shutoff.

Should the engine turn off after a crash, you may restart the engine by carrying out the following.

Ignition Switch

1. Switch the ignition off.
2. Switch the ignition to position **III**.
3. Switch the ignition off.
4. Switch the ignition on again to re-enable the fuel pump.

Note: *Various system checks are automatically carried out before the vehicle will restart. if your vehicle fails to restart after the third attempt, the system has detected a fault that requires service. We recommend you contact an authorized dealer.*

Keyless Starting (If Equipped)

1. Without applying the brake pedal, press and release the button once.
2. Press the brake pedal, and then press and release the button once.
3. Without applying the brake pedal, press and release the button once.
4. Press the brake pedal and then press the button until the engine starts.

Transit (TTS) Vehicles Built From: 27-01-2020 Vehicles Built Up To: 20-09-2020, CG3796en enGBR, Edition date: 201911, First-Printing

Note: *Various system checks are automatically carried out before the vehicle will restart. if your vehicle fails to restart after the third attempt, the system has detected a fault that requires service. We recommend you contact an authorized dealer.*

JUMP STARTING THE VEHICLE

WARNING: Connect batteries with only the same nominal voltage.

WARNING: Use only adequately sized cables with insulated clamps.

Note: *Do not disconnect the battery of the disabled vehicle as this could damage the vehicle electrical system.*

Connecting the Jumper Cables

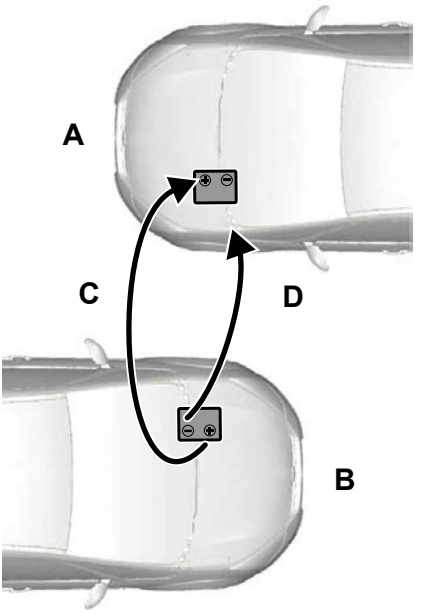

E102925

A	Vehicle with the discharged battery.
B	Vehicle with the booster battery.
C	Positive jumper cable.
D	Negative jumper cable.

Front Wheel Drive

1. Switch the ignition off and any electrical equipment.

Transit (TTS) Vehicles Built From: 27-01-2020 Vehicles Built Up To: 20-09-2020, CG3796en enGBR, Edition date: 201911, First-Printing

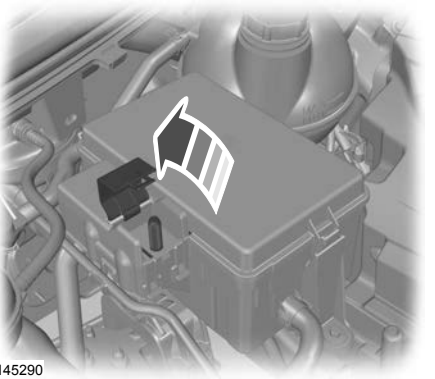
E145290

2. Lift up the battery positive connection point cover. For item location, refer to the appropriate under hood overview. See **Maintenance** (page 248).

WARNING: Make sure that the cables are clear of any moving parts and fuel delivery system parts.

3. Connect one end of the positive jumper cable to the positive terminal of the discharged battery and the other end to the positive terminal of the booster battery.



WARNING: Do not connect the negative jumper cable to any other part of your vehicle. Use the ground point.

4. Connect one end of the negative jumper cable to the negative terminal of the booster battery or to a suitable ground point and the other end to the ground point on your vehicle.

Rear Wheel Drive

1. Switch the ignition off and any electrical equipment.

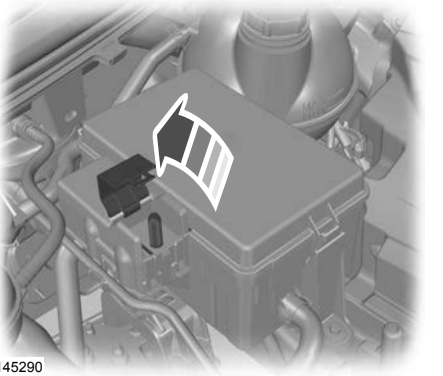
E145290

2. Lift up the battery positive connection point cover. For item location, refer to the appropriate under hood overview. See **Maintenance** (page 248).

WARNING: Make sure that the cables are clear of any moving parts and fuel delivery system parts.

3. Connect one end of the positive jumper cable to the positive terminal of the discharged battery and the other end to the positive terminal of the booster battery.

Transit (TTS) Vehicles Built From: 27-01-2020 Vehicles Built Up To: 20-09-2020, CG3796en enGBR, Edition date: 201911, First-Printing

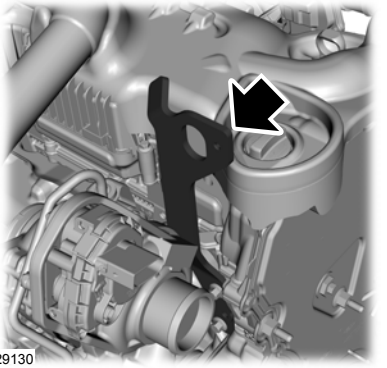

E229130

WARNING: Do not connect the negative jumper cable to any other part of your vehicle. Use the ground point.

4. Connect one end of the negative jumper cable to the negative terminal of the booster battery or to a suitable ground point and the other end to the ground point on your vehicle.

Starting the Engine

1. Start the engine of the vehicle with the booster battery and keep the engine speed between 2000 and 3000 RPM.
2. Start the engine of the vehicle with the discharged battery.
3. When the engine starts, run the engines for three minutes before you disconnect the jumper cables.

Remove the jumper cables in the reverse order that they were connected.

Note: *Do not switch the headlamps on before you disconnect the jumper cables. The peak voltage could cause the bulbs to fail.*

TOWING POINTS

Front Towing Point

WARNING: Make sure that the towing eye is fully tightened. Failure to follow this instruction could result in personal injury.

WARNING: You must switch the ignition on when your vehicle is being towed.



E146426

1. Carefully remove the cover.
2. Install the towing eye.

Note: *It has a left-hand thread. Turn it counterclockwise to install it.*

Transit (TTS) Vehicles Built From: 27-01-2020 Vehicles Built Up To: 20-09-2020, CG3796en enGBR, Edition date: 201911, First-Printing

Rear Towing Point

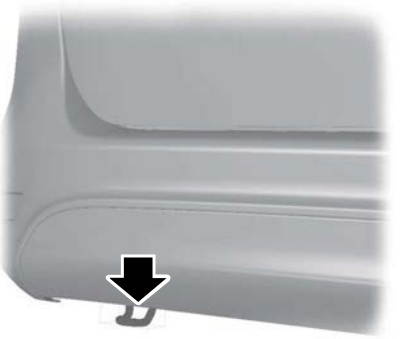

E142319

Towing Eye Location

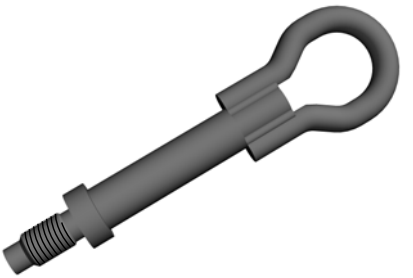

The towing eye may be found:

- Secured to the floor under the passenger seat.
- Secured to the rear of the seat base under the passenger seat.
- Secured under the second row passenger seat.
- Inside the driver door storage compartment.
- Inside the toolkit within the front step storage compartment.

Note: *You must carry the towing eye in your vehicle at all times.*

Transit (TTS) Vehicles Built From: 27-01-2020 Vehicles Built Up To: 20-09-2020, CG3796en enGBR, Edition date: 201911, First-Printing

STORING A FIRST AID KIT

You can store a first aid kit in the passenger side front door storage.

STORING A WARNING TRIANGLE

You can store a warning triangle in the driver side front door storage.

Transit (TTS) Vehicles Built From: 27-01-2020 Vehicles Built Up To: 20-09-2020, CG3796en enGBR, Edition date: 201911, First-Printing

FUSE BOX LOCATIONS

Engine Compartment Fuse Box

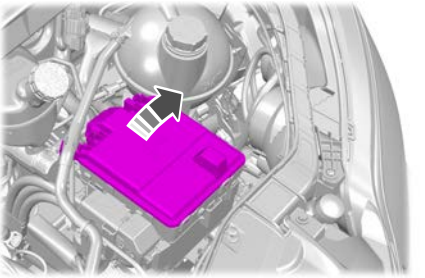

Driver Compartment Fuse Box

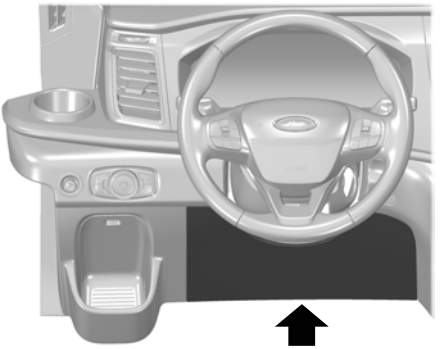

The fuse box is behind the removable trim panel.

Body Control Module



Passenger Compartment Fuse Box



Pre-fuse Box

The fuse box is under the driver seat.

Transit (TTS) Vehicles Built From: 27-01-2020 Vehicles Built Up To: 20-09-2020, CG3796en enGBR, Edition date: 201911, First-Printing

FUSE SPECIFICATION CHART

Engine Compartment Fuse Box

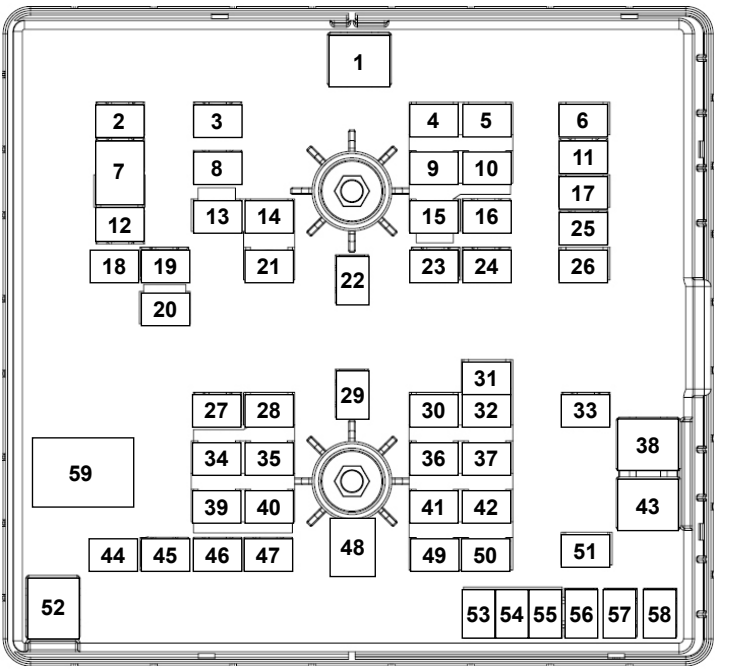

Item	Fuse Rating	Protected Component
1	50 A	Wipers.
2	40 A	All-Wheel Drive.
3	40 A	Right-hand heated windshield element.
4	15 A	Rear window washer pump.
5	-	Not used.
6	-	Not used.
7	40 A	Front blower motor.

Transit (TTS) Vehicles Built From: 27-01-2020 Vehicles Built Up To: 20-09-2020, CG3796en enGBR, Edition date: 201911, First-Printing

Item	Fuse Rating	Protected Component
8	40 A	Left-hand heated windshield element.
9	15 A	Rear door latch.
10	5 A	Battery energy control module - MHEV.
11	40 A	Auxiliary power point. USB port.
12	20 A	Horn.
13	20 A	Selective catalytic reduction system.
14	10 A	Battery energy control module - Powertrain control module.
15	-	Not used.
16	-	Not used.
17	10 A	Right-hand high-intensity discharge headlamps.
18	40 A	Rear window defroster.
19	20 A	Front fog lamps.
20	10 A	Power folding mirrors.
21	15 A	Vehicle power 4.
22	40 A	Rear blower motor.
23	20 A	Fuel pump.
24	40 A	Run/Start relay.
25	40 A	Auxiliary power points.
26	10 A	Left-hand high-intensity discharge headlamps.
27	40 A	Selective catalytic reduction system.
28	20 A	Vehicle power 1.
29	40 A	Fuel filter heater.
30	15 A	Coolant pump.
31	5 A	Anti-lock brake system.
32	15 A	Transmission control module.
33	30 A	Starter motor.

Transit (TTS) Vehicles Built From: 27-01-2020 Vehicles Built Up To: 20-09-2020, CG3796en enGBR, Edition date: 201911, First-Printing

Item	Fuse Rating	Protected Component
34	15 A	Selective catalytic reduction system.
35	15 A	Vehicle power 2.
36	5 A	Belt integrated starter generator - MHEV.
37	5 A	Glow plugs. Powertrain control module.
38	60 A	Glow plug control module.
39	15 A	Selective catalytic reduction system.
40	10 A	Vehicle power 3.
41	10 A	Controller glow plug.
42	15 A	Transmission control unit.
43	60 A	Anti-lock brake system pump.
44	25 A	Cooling fan.
45	30 A	Trailer socket.
46	-	Not used.
47	-	Not used.
48	50 A	Cooling fan.
49	15 A	Nitrogen oxides sensor.
50	5 A	Closed crankcase ventilation heater.
51	10 A	Air conditioning clutch.
52	50 A	Cooling fan.
53	5 A	Active tensioner - MHEV.
54	20 A	Backup alarm.
55	25 A	Transmission oil pump.
56	20 A	Fuel fired booster heater.
57	25 A	Anti-lock brake system with electronic stability control.
58	30 A	Trailer socket.
59	-	Cooling fan relay.

Transit (TTS) Vehicles Built From: 27-01-2020 Vehicles Built Up To: 20-09-2020, CG3796en enGBR, Edition date: 201911, First-Printing

Driver Compartment Fuse Box

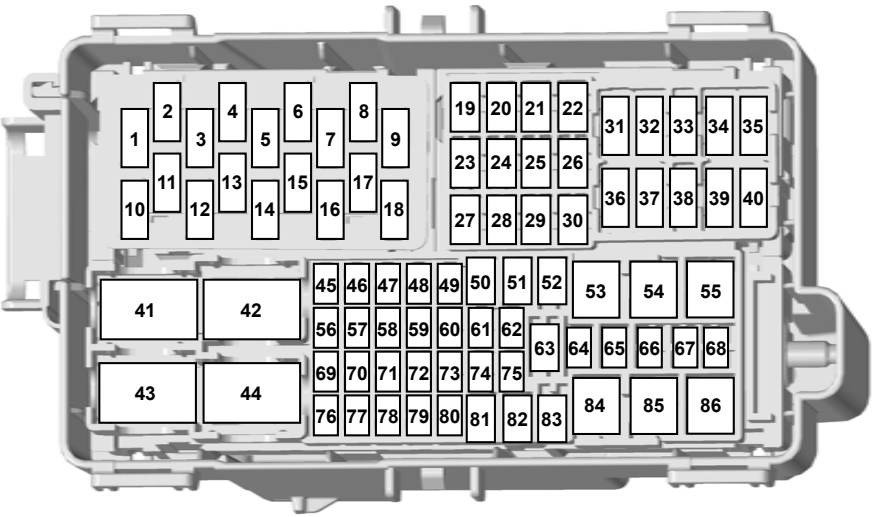

Item	Fuse Rating	Protected Component
1	5 A	USB port.
2	-	Not used.
3	5 A	USB port.
4	-	Not used.
5	-	Not used.
6	-	Not used.
7	-	Not used.
8	-	Not used.
9	10 A	Heated exterior mirrors.
10	-	Not used.
11	-	Not used.
12	-	Not used.

Transit (TTS) Vehicles Built From: 27-01-2020 Vehicles Built Up To: 20-09-2020, CG3796en enGBR, Edition date: 201911, First-Printing

Item	Fuse Rating	Protected Component
13	-	Not used.
14	-	Not used.
15	-	Not used.
16	5 A	Rain sensor.
17	-	Not used.
18	20 A	Rear window wiper motor.
19	-	Not used.
20	-	Not used.
21	20 A	Heated rear window.
22	20 A	Heated rear window.
23	20 A	Auxiliary power point.
24	20 A	Auxiliary power point.
25	-	Not used.
26	25 A	Windshield wiper motor.
27	-	Not used.
28	-	Not used.
29	-	Not used.
30	30 A	Power running boards.
31	-	Not used.
32	-	Not used.
33	-	Not used.
34	-	Not used.
35	5 A	Trailer tow module.
36	-	Not used.
37	-	Not used.
38	-	Not used.
39	-	Not used.

Transit (TTS) Vehicles Built From: 27-01-2020 Vehicles Built Up To: 20-09-2020, CG3796en enGBR, Edition date: 201911, First-Printing

Item	Fuse Rating	Protected Component
40	-	Not used.
41	-	Not used.
42	40 A	Starter relay.
43	-	Upfitter relay.
44	40 A	Starter relay.
45	10 A	Upfitter interface module.
46	15 A	Trailer tow module.
47	5 A	Fuel fired heater.
48	-	Not used.
49	10 A	Brake pedal switch.
50	-	Not used.
51	-	Not used.
52	30 A	Driver power seat.
53	60 A	Battery.
54	60 A	Power inverter.
55	50 A	Body control module.
56	-	Not used.
57	-	Not used.
58	10 A	Connector camper body interface. Upfitter interface. Secondary junction box.
59	10 A	Rear climate control. Front view camera. Rear view camera. Adaptive cruise control module. Blind spot information system.
60	10 A	Reductant dosage control module.
61	7.5 A	Tachograph.
62	15 A	Enhanced cut off relay system module.

Transit (TTS) Vehicles Built From: 27-01-2020 Vehicles Built Up To: 20-09-2020, CG3796en enGBR, Edition date: 201911, First-Printing

Item	Fuse Rating	Protected Component
63	20 A	Auxiliary power point.
64	-	Not used.
65	-	Not used.
66	10 A	Enhanced cut off relay system. Camper. Load shed relay.
67	-	Not used.
68	-	Not used.
69	5 A	Steering wheel module.
70	-	Not used.
71	10 A	Heated seats.
72	10 A	Heated seats.
73	20 A	Adaptive front lighting module. Headlamp leveling.
74	-	Not used.
75	20 A	Engine compartment fuse box.
76	10 A	Power sliding door control switch.
77	5 A	Headlamp switch.
78	10 A	Power sliding door latch switch.
79	-	Not used.
80	5 A	Starter relay.
81	40 A	Trailer tow module.
82	30 A	Power sliding door.
83	-	Not used.
84	50 A	Body control module.
85	30 A	Power sliding door.
86	50 A	Body control module.

Transit (TTS) Vehicles Built From: 27-01-2020 Vehicles Built Up To: 20-09-2020, CG3796en enGBR, Edition date: 201911, First-Printing

Body Control Module

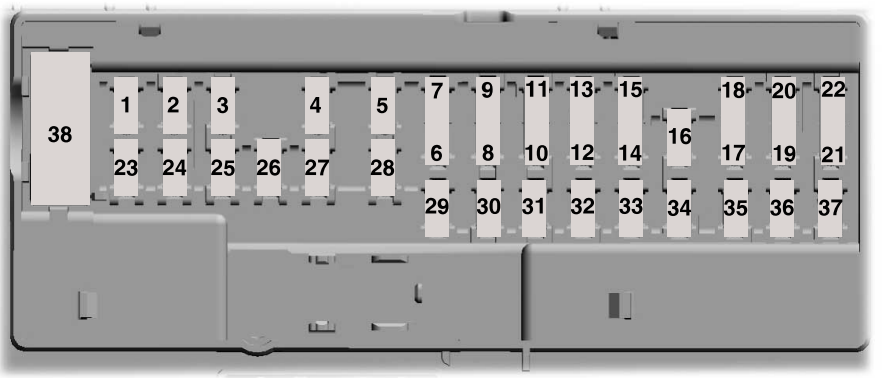

E145984

Item	Fuse Rating	Protected Component
1	-	Not used.
2	10 A	Power inverter.
3	7.5 A	Power window switch. Power exterior mirrors.
4	20 A	Not used.
5	-	Not used.
6	10 A	Not used.
7	10 A	Not used.
8	5 A	Anti-theft alarm horn.
9	5 A	Intrusion sensor. Rear air conditioning.
10	-	Not used.
11	-	Not used.
12	7.5 A	Climate control.

Transit (TTS) Vehicles Built From: 27-01-2020 Vehicles Built Up To: 20-09-2020, CG3796en enGBR, Edition date: 201911, First-Printing

Item	Fuse Rating	Protected Component
13	7.5 A	Data link connector. Steering column. Instrument cluster.
14	15 A	Battery energy control module - MHEV.
15	15 A	SYNC 3 module.
16	-	Not used.
17	7.5 A	Tachograph.
18	7.5 A	Not used.
19	5 A	Battery back-up sounder.
20	5 A	Ignition switch.
21	5 A	Positive temperature coefficient heater control.
22	5 A	Pedestrian alert control module.
23	30 A	Not used.
24	30 A	Not used.
25	20 A	Not used.
26	30 A	Not used.
27	30 A	Not used.
28	30 A	Not used.
29	15 A	Not used.
30	5 A	Not used.
31	10 A	Data link connector. Remote key receiver.
32	20 A	Radio. Telematics module.
33	-	Not used.
34	30 A	Tachograph. Message center. Positive temperature coefficient heater. Direct current/Alternating current inverter. Lane keeping system camera. Parking aid.

Transit (TTS) Vehicles Built From: 27-01-2020 Vehicles Built Up To: 20-09-2020, CG3796en enGBR, Edition date: 201911, First-Printing

Item	Fuse Rating	Protected Component
		Steering column.
35	5 A	Not used.
36	15 A	Parking aid. Lane keeping system camera. Steering column control module.
37	20 A	Not used.
38	30 A	Power windows.

Passenger Compartment Fuse Box

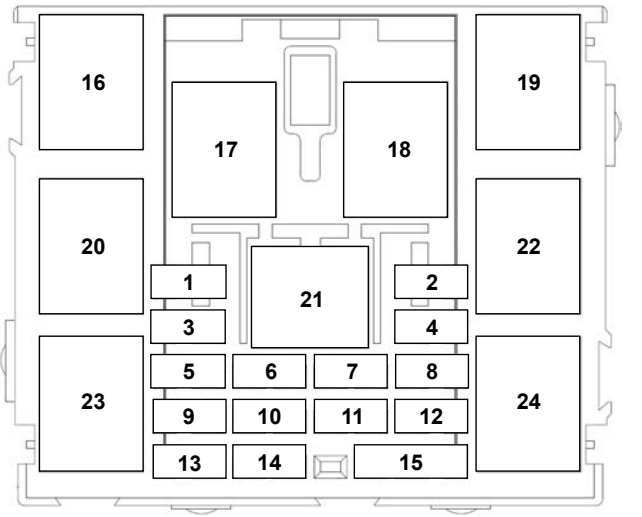

Item	Fuse Rating	Protected Component
1	40 A	Auxiliary switch 1.
2	40 A	Auxiliary switch 2.
3	20 A	Beacon switch.
4	20 A	Ignition.

Transit (TTS) Vehicles Built From: 27-01-2020 Vehicles Built Up To: 20-09-2020, CG3796en enGBR, Edition date: 201911, First-Printing

Item	Fuse Rating	Protected Component
5	10 A	Direction indicators.
6	5 A	Auxiliary switch 2 LED.
7	-	Not used.
8	10 A	Interior lighting.
9	15 A	Two-way radio connector.
10	5 A	Ignition.
11	10 A	Ignition.
12	20 A	Touchscreen.
13	-	Not used.
14	5 A	Ignition.
15	5 A	Power supply.
16	-	Beacon relay.
17	-	Auxiliary switch 1 relay.
18	-	Auxiliary switch 2 relay.
19	-	Ignition relay.
20	-	Left direction indicator relay.
21	-	Power mode relay.
22	-	Exterior lamps relay.
23	-	Right direction indicator relay.
24	-	Not used.

Transit (TTS) Vehicles Built From: 27-01-2020 Vehicles Built Up To: 20-09-2020, CG3796en enGBR, Edition date: 201911, First-Printing

Pre-fuse Box

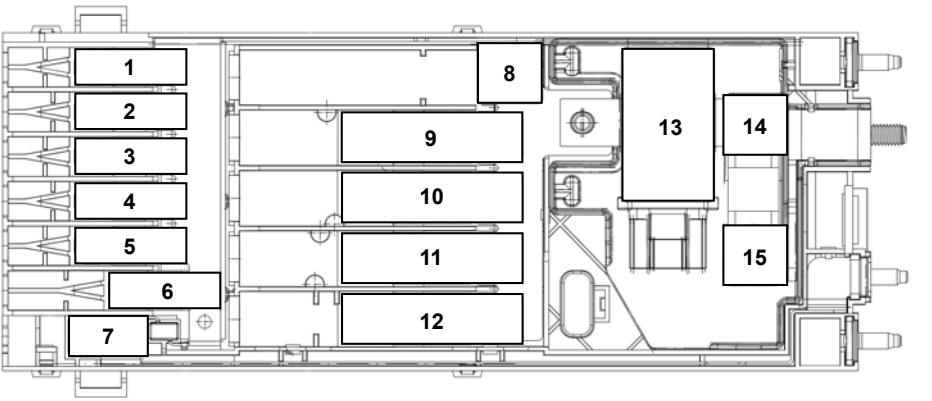

Item	Fuse Rating	Protected Component
1	125 A	Body control module.
2	80 A	Electronic power assist steering.
3	150 A	Auxiliary heater.
4	-	Not used.
5	-	Not used.
6	150 A	Passenger compartment fuse box.
7	60 A	Camper.
8	-	Battery.
9	470 A	Starter motor. Alternator.
10	300 A	Engine compartment fuse box.
11	250 A	Direct current/Direct current converter - MHEV.

Transit (TTS) Vehicles Built From: 27-01-2020 Vehicles Built Up To: 20-09-2020, CG3796en enGBR, Edition date: 201911, First-Printing

Item	Fuse Rating	Protected Component
12	150 A	Driver compartment fuse box.
13	-	Load shed relay.
14	180 A	Auxiliary power point 1.
15	60 A	Auxiliary power point 2.

CHANGING A FUSE

Fuses

WARNING: Always replace a fuse with one that has the specified amperage rating. Using a fuse with a higher amperage rating can cause severe wire damage and could start a fire.

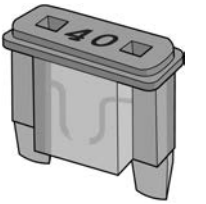

E217331

If electrical components in the vehicle are not working, a fuse may have blown. Blown fuses are identified by a broken wire within the fuse. Check the appropriate fuses before replacing any electrical components.

Fuse Types

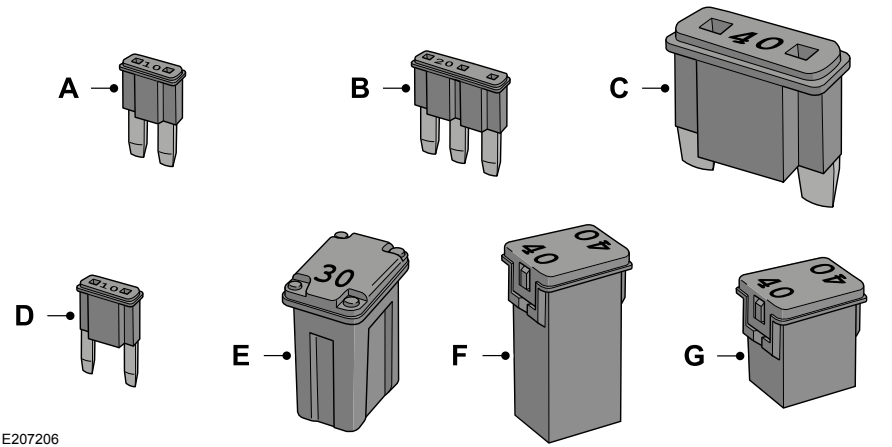

E207206

Transit (TTS) Vehicles Built From: 27-01-2020 Vehicles Built Up To: 20-09-2020, CG3796en enGBR, Edition date: 201911, First-Printing

Callout	Fuse Type
A	Micro 2
B	Micro 3
C	Maxi
D	Mini
E	M Case
F	J Case
G	J Case Low Profile

Transit (TTS) Vehicles Built From: 27-01-2020 Vehicles Built Up To: 20-09-2020, CG3796en enGBR, Edition date: 201911, First-Printing

GENERAL INFORMATION

WARNING: Do not work on a hot engine.

WARNING: Switch the ignition off and apply the parking brake.

WARNING: Do not touch the electronic ignition system parts after you have switched the ignition on or when the engine is running. The system operates at high voltage. Failure to adhere to this warning could result in serious personal injury or death.

WARNING: Keep your hands and clothing clear of the engine cooling fan.

Under certain conditions, the engine cooling fan may continue to run for several minutes after you switch your vehicle off. See **Engine Cooling Fan** (page 254).

Make sure that you fit filler caps securely after carrying out maintenance checks.

We recommend that you carry out the following checks.

Check Daily

- Exterior lamps.
- Interior lamps.
- Warning lamps and indicators.

Check When Refueling

- Washer fluid level. See **Washer Fluid Check** (page 261).
- Tire pressures. See **Tire Pressures** (page 290).
- Tire condition. See **Wheels and Tires** (page 273).

Check Monthly

- Engine oil level. See **Engine Oil Check** (page 253).
- Engine coolant level. See **Engine Coolant Check** (page 254).
- Brake fluid level. See **Brake Fluid Check** (page 256).
- Pipes, hoses and reservoirs for leaks.
- Air conditioning operation.
- Parking brake operation.
- Horn operation.
- Tightness of lug nuts. See **Lug Nuts** (page 297).

OPENING AND CLOSING THE HOOD

Opening the Hood

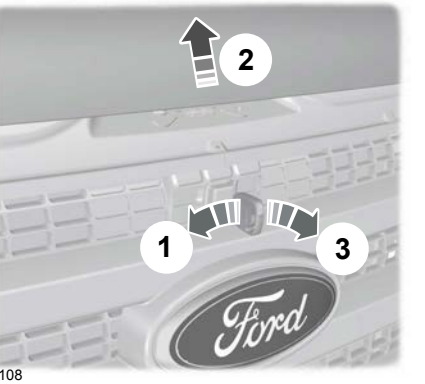

E72108

1. Insert the vehicle key into the hood lock and turn it counterclockwise.

Note: *Make sure the key is clean before inserting it into any lock cylinder.*

2. Slightly lift the hood.
3. Turn the key clockwise to release the hood.

Transit (TTS) Vehicles Built From: 27-01-2020 Vehicles Built Up To: 20-09-2020, CG3796en enGBR, Edition date: 201911, First-Printing



E87786

4. Support the hood with the strut.

Closing the Hood

1. Remove the hood strut from the catch and secure it correctly after use.
2. Lower the hood and allow it to drop under its own weight for the last 20–30 cm (8–12 in).

Note: *Make sure that the hood is correctly closed.*

UNDER HOOD OVERVIEW - AWD/RWD/LHD

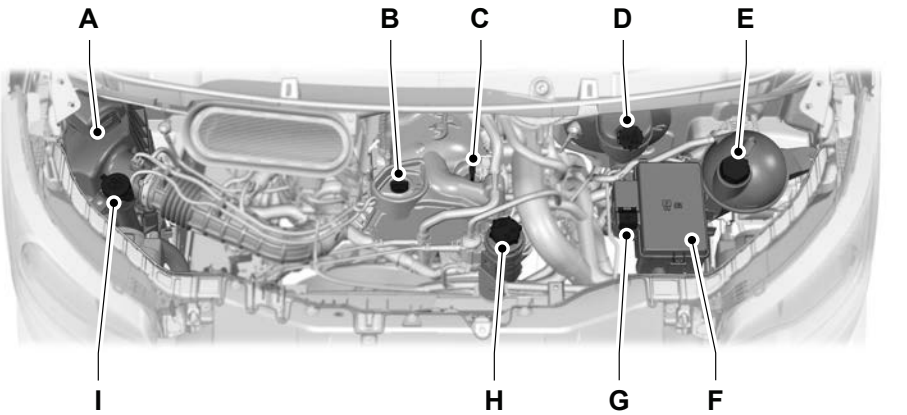

E226292

A Air filter.

B Engine oil filler cap. See **Engine Oil Check** (page 253).

C Engine oil dipstick. See **Engine Oil Dipstick** (page 253).

D Brake fluid reservoir.

E Engine coolant reservoir. See **Engine Coolant Check** (page 254).

Transit (TTS) Vehicles Built From: 27-01-2020 Vehicles Built Up To: 20-09-2020, CG3796en enGBR, Edition date: 201911, First-Printing

F Engine compartment fuse box. See **Fuses** (page 233).
G Battery connection. See **Jump Starting the Vehicle** (page 228).
H Power steering fluid reservoir. See **Power Steering Fluid Check** (page 256).
I Washer system fluid reservoir. See **Washer Fluid Check** (page 261).

UNDER HOOD OVERVIEW - FWD/LHD

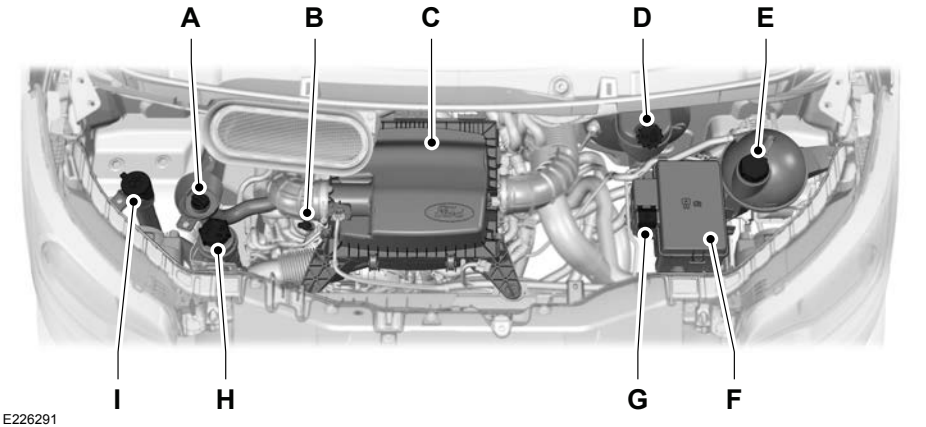

E226291

A Engine oil filler cap. See **Engine Oil Check** (page 253).
B Engine oil dipstick. See **Engine Oil Dipstick** (page 253).
C Air filter.
D Brake fluid reservoir. See **Brake Fluid Check** (page 256).
E Engine coolant reservoir. See **Engine Coolant Check** (page 254).
F Engine compartment fuse box. See **Fuses** (page 233).
G Battery connection. See **Jump Starting the Vehicle** (page 228).
H Power steering fluid reservoir. See **Power Steering Fluid Check** (page 256).
I Washer system fluid reservoir. See **Washer Fluid Check** (page 261).

Transit (TTS) Vehicles Built From: 27-01-2020 Vehicles Built Up To: 20-09-2020, CG3796en enGBR, Edition date: 201911, First-Printing

UNDER HOOD OVERVIEW - AWD/RWD/RHD

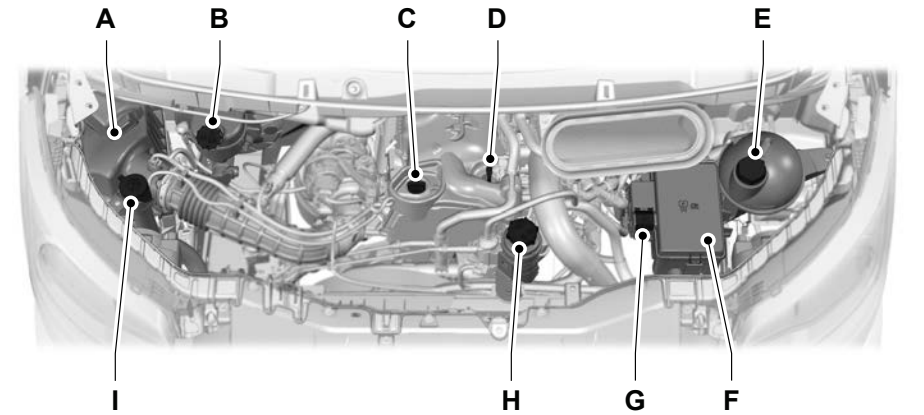

E226294

A Air filter.
B Brake fluid reservoir.
C Engine oil filler cap. See **Engine Oil Check** (page 253).
D Engine oil dipstick. See **Engine Oil Dipstick** (page 253).
E Engine coolant reservoir. See **Engine Coolant Check** (page 254).
F Engine compartment fuse box. See **Fuses** (page 233).
G Battery connection. See **Jump Starting the Vehicle** (page 228).
H Power steering fluid reservoir. See **Power Steering Fluid Check** (page 256).
I Washer system fluid reservoir. See **Washer Fluid Check** (page 261).

Transit (TTS) Vehicles Built From: 27-01-2020 Vehicles Built Up To: 20-09-2020, CG3796en enGBR, Edition date: 201911, First-Printing

UNDER HOOD OVERVIEW - FWD/RHD

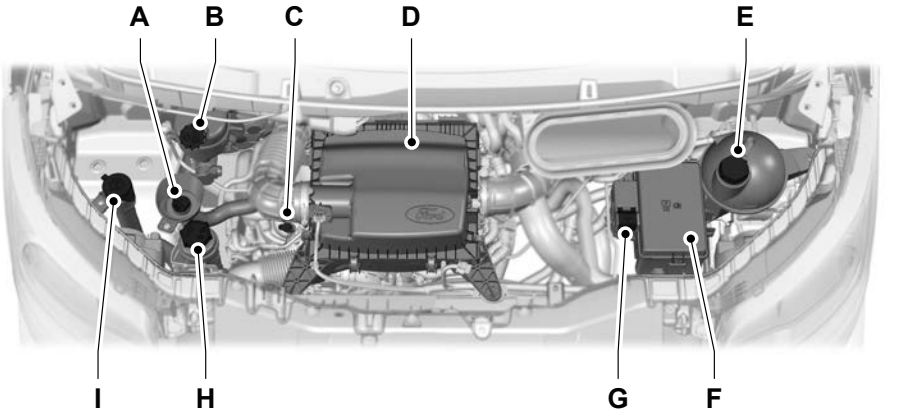

E226293

A Engine oil filler cap. See **Engine Oil Check** (page 253).
B Brake fluid reservoir.
C Engine oil dipstick. See **Engine Oil Dipstick** (page 253).
D Air filter.
E Engine coolant reservoir. See **Engine Coolant Check** (page 254).
F Engine compartment fuse box. See **Fuses** (page 233).
G Battery connection. See **Jump Starting the Vehicle** (page 228).
H Power steering fluid reservoir. See **Power Steering Fluid Check** (page 256).
I Washer system fluid reservoir. See **Washer Fluid Check** (page 261).

Transit (TTS) Vehicles Built From: 27-01-2020 Vehicles Built Up To: 20-09-2020, CG3796en enGBR, Edition date: 201911, First-Printing

ENGINE OIL DIPSTICK

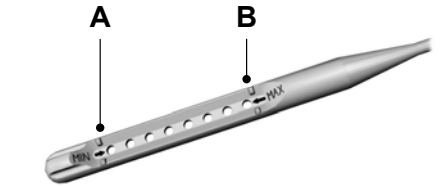

E226469

A Minimum.

B Maximum.

ENGINE OIL CHECK

1. Make sure that your vehicle is on level ground.
2. Check the oil level before starting the engine, or switch the engine off and wait 10 minutes for the oil to drain into the oil pan.
3. Remove the dipstick and wipe it with a clean, lint-free cloth. Reinstall the dipstick and remove it again to check the oil level.

If the oil level is at the minimum mark, immediately add oil.

Note: *Make sure that the oil level is between the minimum and the maximum marks.*

Note: *The oil consumption of new engines reaches its normal level after approximately 5,000 km (3,000 mi).*

Adding Engine Oil

WARNING: Do not add engine oil when the engine is hot. Failure to follow this instruction could result in personal injury.

WARNING: Do not remove the filler cap when the engine is running.

Do not use supplemental engine oil additives because they are unnecessary and could lead to engine damage that may not be covered by the vehicle Warranty.

1. Clean the area surrounding the engine oil filler cap before you remove it.
2. Remove the engine oil filler cap.
3. Add engine oil that meets our specifications. See **Capacities and Specifications** (page 298).
4. Replace the engine oil filler cap. Turn it clockwise until you feel a strong resistance.

Note: *Do not add oil further than the maximum mark. Oil levels above the maximum mark may cause engine damage.*

Note: *Immediately soak up any oil spillage with an absorbent cloth.*

Engine Oil Pressure Warning Lamp

WARNING: If it illuminates when you are driving do not continue your journey, even if the oil level is correct. Have your vehicle checked.



It illuminates when you switch the ignition on.

If it illuminates when the engine is running this indicates a malfunction. Stop your vehicle as soon as it is safe to do so and switch the engine off. Check the engine oil level. If the oil level is sufficient, this indicates a system malfunction. Have your vehicle checked as soon as possible.

Transit (TTS) Vehicles Built From: 27-01-2020 Vehicles Built Up To: 20-09-2020, CG3796en enGBR, Edition date: 201911, First-Printing

DRAINING THE FUEL FILTER WATER TRAP

WARNING: Do not dispose of fuel in the household refuse or the public sewage system. Use an authorized waste disposal facility.

You should drain water from the fuel filter water trap whenever the warning light illuminates or a message appears in the information display.

This occurs when approximately 200 ml (7 fl oz) of water accumulates in the fuel filter water trap. If you ignore the warning lamp, water may pass through to the system and may cause damage not covered by the vehicle Warranty.

Draining the Fuel Filter Water Trap

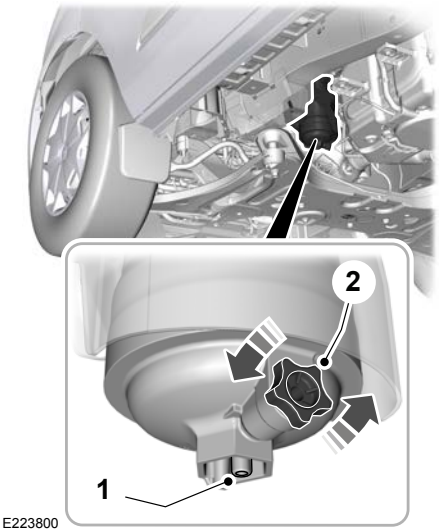

1. Attach a tube to the drain plug and place the end of the tube into a suitable container.
2. Turn the drain plug counterclockwise until it stops. Do not use any tools to loosen the drain plug. Drain the fuel filter water trap into an appropriate container. Do not re-use the fuel drained from the fuel filter water trap.
3. Tighten the drain plug, turn it clockwise until it stops and you feel a strong resistance. Do not use any tools to tighten the drain plug.
4. Switch the ignition of for 30 seconds and then switch the ignition off. Repeat this operation six times in a row to purge any trapped air from the fuel system.

ENGINE COOLING FAN

WARNING: Keep your hands and clothing clear of the engine cooling fan.

Under certain conditions, the engine cooling fan may continue to run for several minutes after you switch your vehicle off. This could happen in low ambient temperatures and independent of the engine coolant temperature, for example short journeys or low coolant temperature. See **Diesel Particulate Filter** (page 144).

ENGINE COOLANT CHECK

WARNING: Do not dispose of coolant in the household refuse or the public sewage system. Use an authorized waste disposal facility.

Transit (TTS) Vehicles Built From: 27-01-2020 Vehicles Built Up To: 20-09-2020, CG3796en enGBR, Edition date: 201911, First-Printing

WARNING: Do not put coolant in the windshield washer reservoir. If sprayed on the windshield, coolant could make it difficult to see through the windshield.



E170684

Make sure that the coolant level is between the ***MIN*** and ***MAX*** marks on the coolant reservoir at ambient temperature. If the coolant level is at or below the minimum mark, immediately add coolant.

The coolant concentration should be maintained within 48% to 50%, which equates to a freeze point between -34ºC (-29ºF) and -37ºC (-35ºF).

Note: *Coolant expands when it is hot. The level may extend beyond the* ***MAX*** *mark.*

Note: *Do not use stop leak pellets, cooling system sealants, or non-specified additives as they can cause damage to the engine cooling or heating systems.*

Adding Coolant

WARNING: Do not remove the coolant reservoir cap when the engine is on or the cooling system is hot. Wait 10 minutes for the cooling system to cool down. Cover the coolant reservoir cap with a thick cloth to prevent the possibility of scalding and slowly remove the cap. Failure to follow this instruction could result in personal injury.

WARNING: Do not allow the fluid to touch your skin or eyes. If this happens, rinse the affected areas immediately with plenty of water and contact your physician.

WARNING: Undiluted coolant is flammable and may ignite if spilled on a hot exhaust.

We do not recommend the use of recycled engine coolant since a Ford-approved recycling process is not yet available.

Do not mix different colors or types of coolant in your vehicle.

Note: *Add a 50/50 mixture of antifreeze and water or prediluted engine coolant that meets the correct specification.*

Note: *Use fluids which meet the specifications or requirements defined. Use of other fluids may lead to damage which is not covered by the vehicle Warranty. See* ***Capacities and Specifications*** *(page 298).*

To top up the coolant level do the following:

1. Remove the coolant reservoir cap.
2. Add coolant to the ***MAX*** mark, do not overfill.
3. Replace the coolant reservoir cap. Turn it clockwise until you feel a strong resistance.

Transit (TTS) Vehicles Built From: 27-01-2020 Vehicles Built Up To: 20-09-2020, CG3796en enGBR, Edition date: 201911, First-Printing

In case of emergency, you can add water without engine coolant in order to reach a vehicle service location.

Note: *Prolonged use of an incorrect dilution of coolant can cause damage, for example corrosion, overheating or freezing.*

BRAKE FLUID CHECK

WARNING: Do not use any fluid other than the recommended brake fluid as this will reduce brake efficiency. Use of incorrect fluid could result in the loss of vehicle control, serious personal injury or death.

WARNING: Only use brake fluid from a sealed container. Contamination with dirt, water, petroleum products or other materials may result in brake system damage or failure. Failure to adhere to this warning could result in the loss of vehicle control, serious personal injury or death.

WARNING: Do not allow the fluid to touch your skin or eyes. If this happens, rinse the affected areas immediately with plenty of water and contact your physician.

WARNING: A fluid level between the ***MAX*** and ***MIN*** lines is within the normal operating range and there is no need to add fluid. A fluid level not in the normal operating range could compromise the performance of the system. Have your vehicle checked immediately.



E170684

To avoid fluid contamination, the reservoir cap must remain in place and fully tight, unless you are adding fluid.

Only use fluid that meets Ford specifications. See **Capacities and Specifications** (page 298).

CLUTCH FLUID CHECK

The clutch and brake systems share the same fluid reservoir. See **Brake Fluid Check** (page 256).

POWER STEERING FLUID CHECK

WARNING: Do not allow the fluid to touch your skin or eyes. If this happens, rinse the affected areas immediately with plenty of water and contact your physician.

Transit (TTS) Vehicles Built From: 27-01-2020 Vehicles Built Up To: 20-09-2020, CG3796en enGBR, Edition date: 201911, First-Printing



E170684

If the power steering fluid level is below the ***MAX*** mark, add power steering fluid that meets the correct specification.

Adding Power Steering Fluid

1. Remove the power steering fluid reservoir filler cap. See **Under Hood Overview** (page 250).
2. Add power steering fluid to the ***MAX*** mark, do not overfill.
3. Replace the power steering fluid reservoir filler cap. Turn it clockwise until you feel a strong resistance.

CHANGING THE 12V BATTERY

The battery is under the driver seat.

Note: *If you have power seats and the battery has no charge, jump-start your vehicle to move the seat. See **Jump Starting the Vehicle** (page 228).*

Removing the Battery

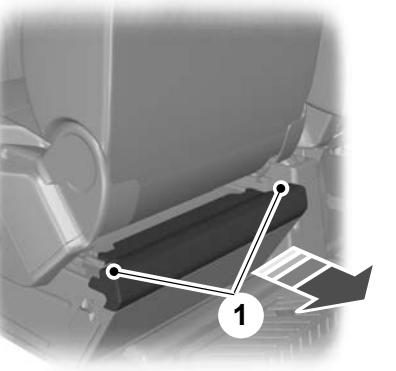

E152526

1. Fully raise the driver seat and move it fully forward. Pull the tabs upward and remove the cover.

Note: *Your vehicle may not have this cover.*

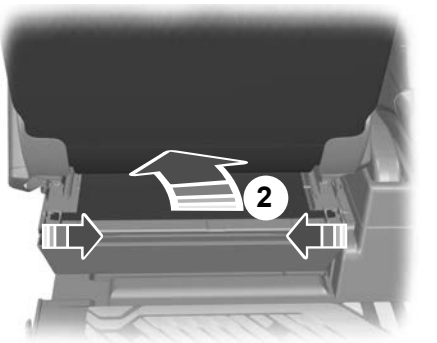

E152529

2. Unhook the cover and tuck it under the seat.

Transit (TTS) Vehicles Built From: 27-01-2020 Vehicles Built Up To: 20-09-2020, CG3796en enGBR, Edition date: 201911, First-Printing

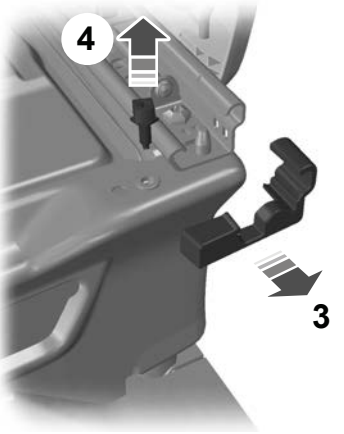

E146781

3. Remove both seat track end caps.

Note: *Your vehicle may not have these end caps.*

4. Remove both seat adjustment end stop bolts at the front of the seat.

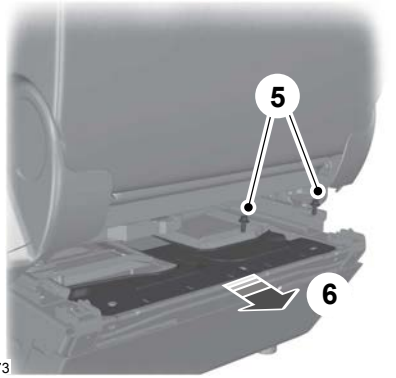

E146773

5. Remove the battery clamp and cover bolts.
6. Remove the battery clamp and cover.

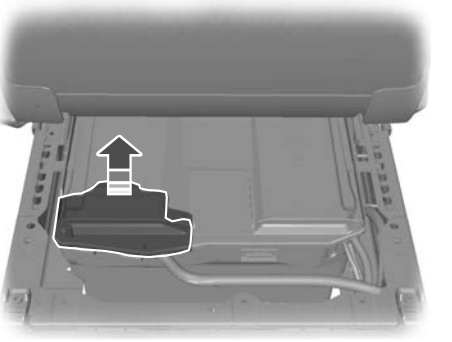

E162774

7. Remove the battery terminal cover and remove the negative (**-**) terminal.

Note: *Single batteries could be mounted the opposite way around in the battery tray. The negative terminal is toward the rear of your vehicle.*

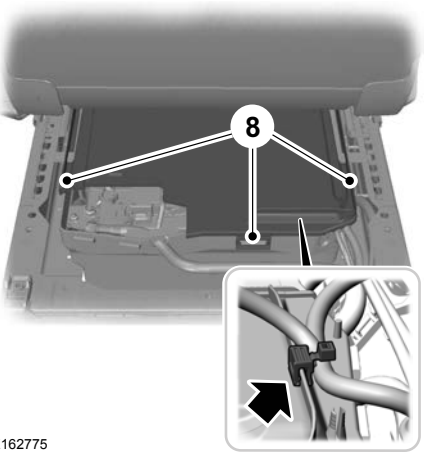

E162775

8. Release the retaining clips and remove the cover.
9. Remove the cable securing clips from the cover.

Transit (TTS) Vehicles Built From: 27-01-2020 Vehicles Built Up To: 20-09-2020, CG3796en enGBR, Edition date: 201911, First-Printing

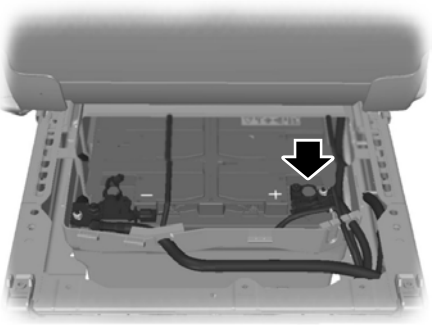

E162776

10. Remove the positive (+) terminal and remove the battery.

Note: *Batteries are heavy.*

11. Move the second battery toward the rear of your vehicle and remove the negative (-) terminal.
12. Remove the positive (+) terminal and remove the battery.

Replacing the Battery

WARNING: Make sure that you securely fasten the seat runner bolts before installing the covers.

You must replace the battery with one of exactly the same specification.

To install, reverse the removal procedure.

Note: *Make sure that you correctly install the battery terminal covers, battery cover and battery cable clips.*

ADJUSTING THE HEADLAMPS

Vertical Aim Adjustment

If your vehicle has been involved in a crash, have the aim of the headlamp beam checked by an authorized dealer.

Headlamp Aiming Target

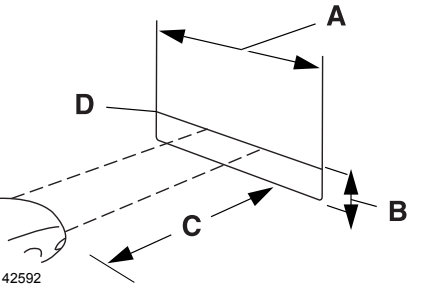

E142592

A	8 ft (2.4 m)
B	Ground to the center of the headlamp low beam bulb
C	25 ft (7.6 m)
D	Horizontal reference line

Vertical Aim Adjustment Procedure

1. Park your vehicle on level ground approximately 7.6 m (25 ft) from a wall or screen.
2. Measure the distance from the ground to the center of the headlamp low beam bulb and mark an 2.4 m (8 ft) long horizontal reference line on the wall or screen at this height.

Transit (TTS) Vehicles Built From: 27-01-2020 Vehicles Built Up To: 20-09-2020, CG3796en enGBR, Edition date: 201911, First-Printing

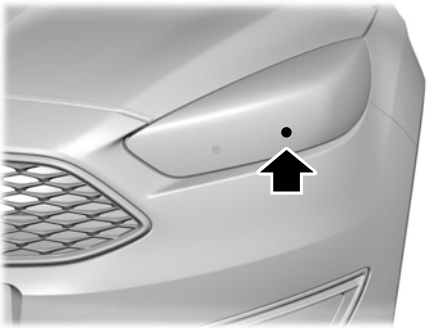

E199411

Note: *There may be an identifying mark on the lens to help you locate the center of the bulb.*

Note: *To see a clearer light pattern while adjusting one headlamp, you may want to block the light from the other headlamp.*

3. Switch on the low beam headlamps and open the hood.

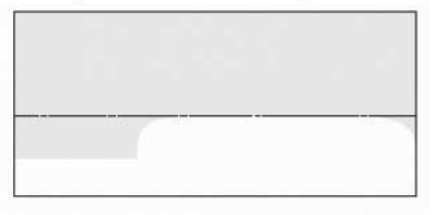

E142465

4. On the wall or screen you will observe a flat zone of high intensity light located at the top of the beam pattern. If the top edge of the flat zone of high intensity light is not on the horizontal reference line, adjust the aim of the headlamp beam.

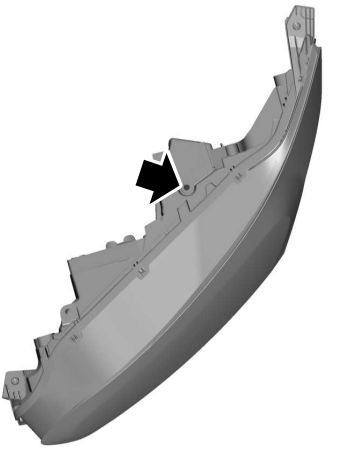

E164485

5. Locate the vertical adjuster on each headlamp. Use a suitable tool, for example a screwdriver or hexagonal socket, to turn the adjuster clockwise or counterclockwise to adjust the vertical aim of the headlamp. The horizontal edge of the brighter light should touch the horizontal reference line.
6. Close the hood and switch off the lamps.

Horizontal Aim Adjustment

The horizontal aim of the headlamp beam on your vehicle is not adjustable.

FUEL FILTER SERVICE INDICATOR CHECK



If the warning lamp illuminates when the engine is running this indicates there is excess water in the fuel filter.

Transit (TTS) Vehicles Built From: 27-01-2020 Vehicles Built Up To: 20-09-2020, CG3796en enGBR, Edition date: 201911, First-Printing

This occurs when approximately 200 ml (7 fl oz) of water accumulates in the fuel filter water trap. Have your vehicle checked as soon as possible.

Alternatively you can drain the fuel filter water trap. See **Draining the Fuel Filter Water Trap** (page 254).

WASHER FLUID CHECK

When adding fluid, use a mixture of washer fluid and water to help prevent freezing in cold weather and improve the cleaning capability. For information on fluid dilution, refer to the product instructions. We recommend that you only use high quality washer fluid.

Note: *The reservoir supplies the front and rear washer systems.*

CHECKING THE WIPER BLADES



E142463

Run the tip of your fingers over the edge of the blade to check for roughness.

Clean the wiper blades with washer fluid or water applied with a soft sponge or cloth.

CHANGING THE FRONT WIPER BLADES

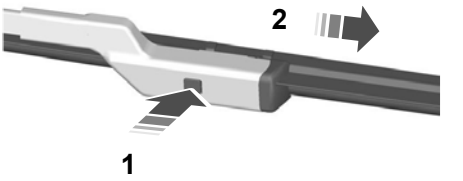

E72899

1. Lift the wiper arm. Press the wiper blade locking button.

Note: *Do not hold the wiper blade when lifting the wiper arm.*

2. Remove the wiper blade.

Note: *Make sure that the wiper arm does not spring back against the glass when the wiper blade is not attached.*

3. To install, reverse the removal procedure.

Note: *Make sure that the wiper blade locks into place.*

CHANGING THE REAR WIPER BLADES

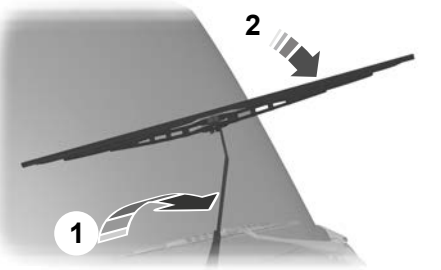

E93783

1. Lift the wiper arm.

Transit (TTS) Vehicles Built From: 27-01-2020 Vehicles Built Up To: 20-09-2020, CG3796en enGBR, Edition date: 201911, First-Printing

Note: *Do not hold the wiper blade when lifting the wiper arm.*

2. Slightly rotate the wiper blade.

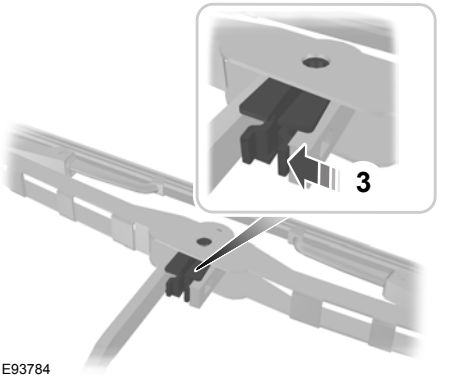

E93784

3. Press the wiper blade locking clip.

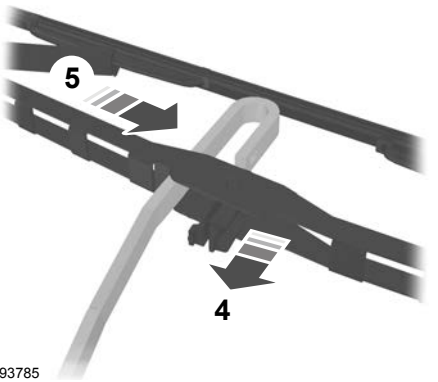

E93785

4. Disengage the wiper blade from the wiper arm.
5. Move the wiper blade to the side.

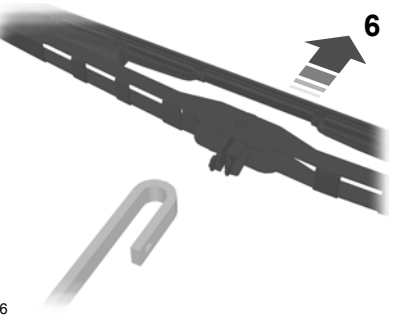

E93786

6. Remove the wiper blade.

Note: *Make sure that the wiper arm does not spring back against the glass when the wiper blade is not attached.*

7. To install, reverse the removal procedure.

Note: *Make sure that the wiper blade locks into place.*

REMOVING A HEADLAMP

WARNING: Switch all of the lamps and the ignition off. Failure to follow this warning could result in serious personal injury.

1. Open the hood. See **Opening and Closing the Hood** (page 248).

Transit (TTS) Vehicles Built From: 27-01-2020 Vehicles Built Up To: 20-09-2020, CG3796en enGBR, Edition date: 201911, First-Printing

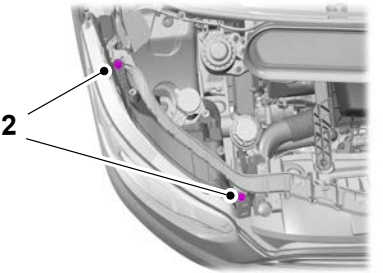

E169198

2. Remove the screws.

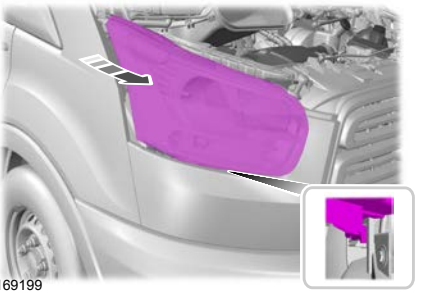

E169199

3. Pull the headlamp toward the front of your vehicle to disengage it from its locating points and then lift the headlamp up.

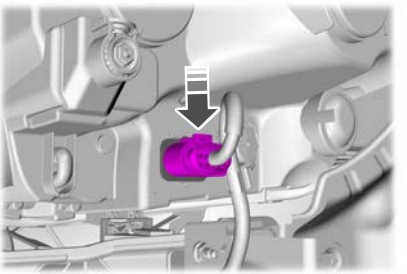

E169200

4. Disconnect the electrical connectors.

Note: *When you install the headlamp, make sure that you correctly attach the electrical connector.*

Note: *When you install the headlamp, make sure that you correctly engage its locating points.*

CHANGING A BULB

WARNING: Switch all of the lamps and the ignition off. Failure to do so could result in serious personal injury.

WARNING: Bulbs become hot when in use. Let them cool down before you remove them.

Use the correct specification bulb. See **Bulb Specification Chart** (page 310).

The following instructions describe how to remove the bulbs. Install in the reverse order unless otherwise stated.

Note: *LED lamps are not serviceable. See an authorized dealer.*

Headlamp

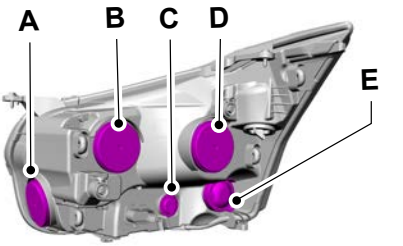

E169204

A	Cornering lamp
B	Daytime running lamp and headlamp high beam

Transit (TTS) Vehicles Built From: 27-01-2020 Vehicles Built Up To: 20-09-2020, CG3796en enGBR, Edition date: 201911, First-Printing

C Direction indicator
D Headlamp low beam
E Side lamp

Note: *You may have to remove a cover to gain access to the bulb.*

Side Lamp

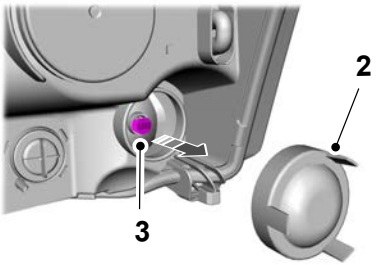

E170405

1. Remove the headlamp. See **Removing a Headlamp** (page 262).
2. Remove the cover.
3. Remove the bulb holder by pulling it straight out. Remove the bulb.

Direction Indicator

Remove the headlamp. See **Removing a Headlamp** (page 262).

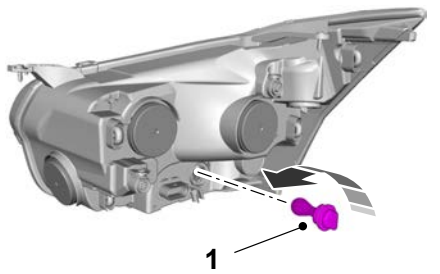

E169205

1. Turn the bulb holder counterclockwise and remove it.
2. Press the bulb in and turn the bulb counterclockwise to remove it.

Headlamp Low Beam

Remove the headlamp. See **Removing a Headlamp** (page 262).

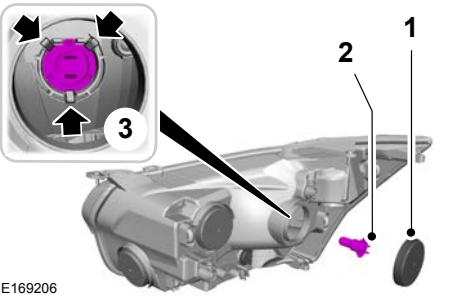

E169206

1. Remove the cover.
2. Disconnect the electrical connector.
3. Pull the bulb straight out past the retaining clips.

Note: *Do not touch the glass of the bulb.*

Headlamp High Beam

1. Remove the headlamp. See **Removing a Headlamp** (page 262).

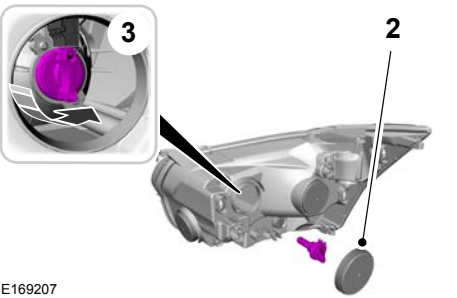

E169207

2. Remove the cover.
3. Turn the bulb counterclockwise and remove it.

Transit (TTS) Vehicles Built From: 27-01-2020 Vehicles Built Up To: 20-09-2020, CG3796en enGBR, Edition date: 201911, First-Printing

Note: *Do not touch the glass of the bulb.*

Note: *You cannot separate the bulb from the bulb holder.*

Cornering Lamp

Remove the headlamp. See **Removing a Headlamp** (page 262).

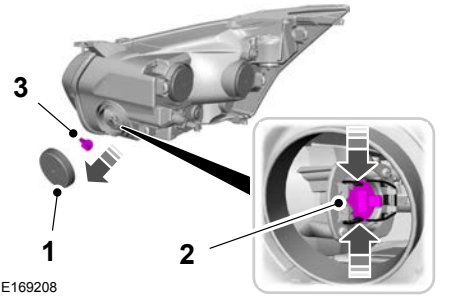

1. Remove the cover.
2. Disconnect the electrical connector and release the clip.
3. Remove the bulb.

Note: *Do not touch the glass of the bulb.*

Side Repeater

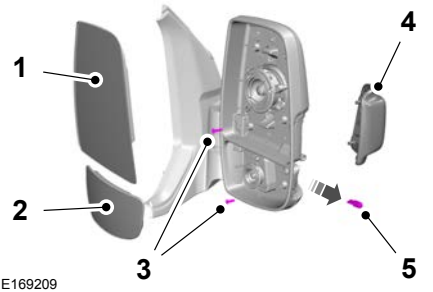

1. Remove the large mirror glass. Tilt the mirror glass fully up, pull the mirror glass toward you from the bottom.
2. Remove the small mirror glass. Tilt the mirror glass fully down, pull the mirror glass toward you from the top.
3. Remove the screws.
4. Remove the lamp lens.
5. Remove the bulb.

Front Fog Lamps

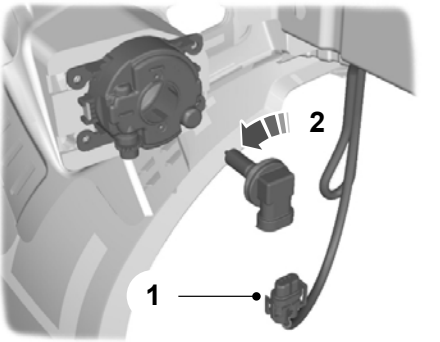

1. Disconnect the electrical connector.
2. Turn the bulb holder counterclockwise and remove it.

Note: *You cannot separate the bulb from the bulb holder.*

Transit (TTS) Vehicles Built From: 27-01-2020 Vehicles Built Up To: 20-09-2020, CG3796en enGBR, Edition date: 201911, First-Printing

Rear Lamps

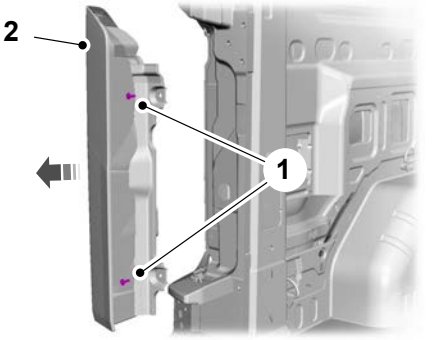

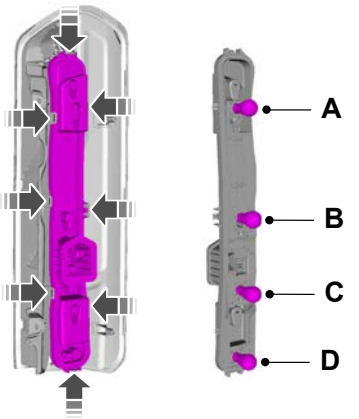

E169210

A Tail and brake lamp
B Direction indicator
C Reversing lamp
D Fog lamp

1. Remove the screws.
2. Remove the lamp and unclip the bulb holder.
3. Press the bulb in and turn the bulb counterclockwise to remove it.

Central High Mounted Brake Lamp

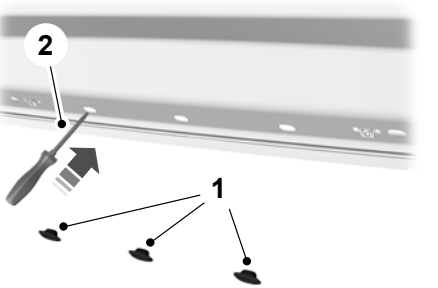

E162641

1. Remove the rubber grommets.

Note: *If fitted, remove the trim panel first.*

2. Using a screwdriver, gently prise the clips to release the lamp.

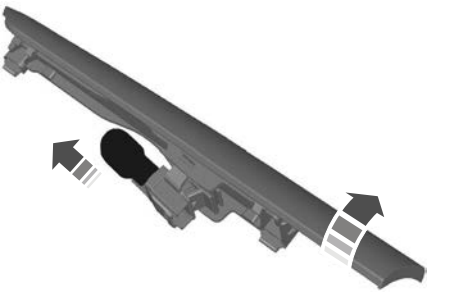

E146638

3. Carefully remove the lamp.
4. Remove the bulb.

Note: *LED lamps are not serviceable. See an authorized dealer.*

Transit (TTS) Vehicles Built From: 27-01-2020 Vehicles Built Up To: 20-09-2020, CG3796en enGBR, Edition date: 201911, First-Printing

License Plate Lamp

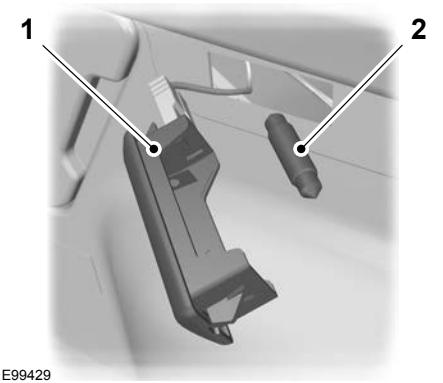

E99429

1. Carefully remove the lamp.
2. Remove the bulb.

Interior Lamp

Entrance Lamps

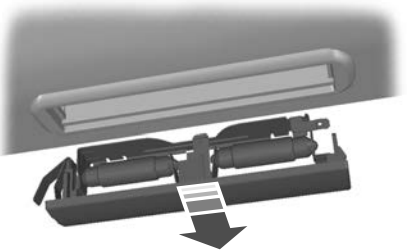

E154369

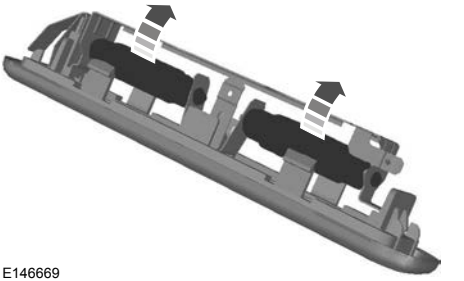

E146669

1. Carefully remove the lamp.
2. Remove the bulbs.

Vehicles with Interior Sensors

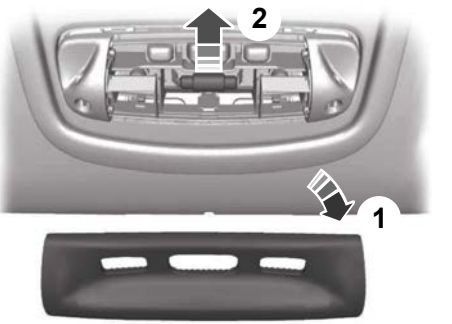

E154370

1. Carefully remove the lens.
2. Remove the bulb.

Transit (TTS) Vehicles Built From: 27-01-2020 Vehicles Built Up To: 20-09-2020, CG3796en enGBR, Edition date: 201911, First-Printing

Reading Lamps

Vehicles with Interior Sensors

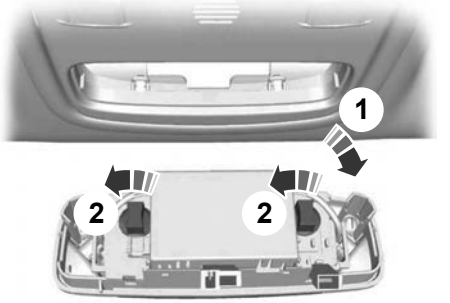

E72786

1. Carefully remove the lamp.
2. Turn the bulb holder counterclockwise and remove it.

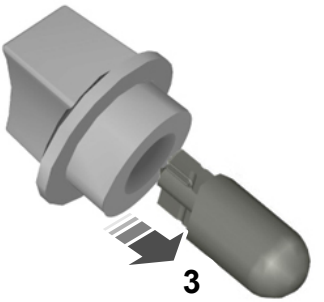

E73939

3. Remove the bulb.

Vehicles without Interior Sensors

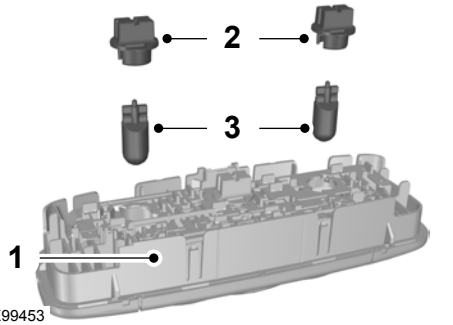

E99453

1. Carefully remove the lamp.
2. Turn the bulb holder counterclockwise and remove it.
3. Remove the bulb.

Sun Visor Mirror Lamp

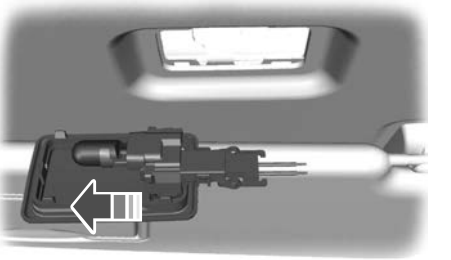

E72785

1. Carefully remove the lamp.
2. Remove the bulb.

Transit (TTS) Vehicles Built From: 27-01-2020 Vehicles Built Up To: 20-09-2020, CG3796en enGBR, Edition date: 201911, First-Printing

CLEANING THE EXTERIOR

Wash your vehicle regularly with cool or lukewarm water and a neutral pH shampoo.

- Never use strong household detergents or soap, for example dish washing or laundry liquid. These products can discolor and spot painted surfaces.
- Never wash your vehicle when it is hot to the touch, or during strong or direct sunlight.
- Dry your vehicle with a chamois or soft terry cloth towel to eliminate water spotting.
- Immediately remove fuel spillages, bird droppings, insect deposits and road tar. These may cause damage to your vehicle's paintwork or trim over time.
- Remove any exterior accessories, for example antennas, before entering a car wash.
- When filling with AdBlue®, remove any residue on painted surfaces immediately.

Note: *Suntan lotions and insect repellents can damage painted surfaces. If these substances come in contact with your vehicle, wash the affected area as soon as possible.*

Note: *If you use a car wash with a waxing cycle, make sure that you remove the wax from the windshield and the wiper blades.*

Note: *Before using a car wash, check that it is suitable for your vehicle.*

Note: *Some car washes use water at high pressure. Due to this, water droplets may enter inside your vehicle and could also damage certain parts of your vehicle.*

Note: *Remove the antenna before using an automatic car wash.*

Note: *Switch the blower motor off to prevent contamination of the cabin air filter.*

We recommend that you wash your vehicle with a sponge and lukewarm water containing a car shampoo.

Cleaning the Headlamps

Note: *Do not scrape the headlamps.*

Note: *Do not use abrasives, alcoholic solvents or chemical solvents to clean the headlamps.*

Note: *Do not wipe the headlamps when they are dry.*

Cleaning the Rear Window

Note: *Do not scrape the inside of the rear window*

Note: *Do not use abrasives, alcoholic solvents or chemical solvents to clean the inside of the rear window.*

Clean the inside of the rear window with a soft, lint-free cloth and non-abrasive cleaner.

Cleaning the Chrome Trim (If Equipped)

Note: *Do not use abrasives or chemical solvents. Use soapy water.*

Note: *Do not apply cleaning product to hot surfaces and do not leave cleaning product on chrome surfaces for a period of time exceeding that which is recommended.*

Note: *Industrial-strength (heavy-duty) cleaners, or cleaning chemicals, may cause damage over a period of time.*

Cleaning Stripes or Graphics (If Equipped)

Hand washing your vehicle is preferred however, pressure washing may be used under the following conditions:

- Do not use water pressure higher than 14,000 kPa (2,000 psi).
- Do not use water hotter than 82°C (179°F).

Transit (TTS) Vehicles Built From: 27-01-2020 Vehicles Built Up To: 20-09-2020, CG3796en enGBR, Edition date: 201911, First-Printing

- Use a spray with a 40º wide spray angle pattern.
- Keep the nozzle at a 305 mm (12 in) distance and 90º angle to your vehicle's surface.

Note: *Holding the pressure washer nozzle at an angle to the vehicle's surface may damage graphics and cause the edges to peel away from the vehicle's surface.*

BodyPaintwork Preservation

Frequently remove particles such as bird droppings, tree sap, insect deposits, tar spots, road salt and industrial fallout to avoid paint surface damage.

Frequently wash the underbody of your vehicle if salt is applied on the road.

We recommend that you wax the paintwork once or twice a year.

Note: *Do not apply polish in strong sunlight as this dries the polish too quickly.*

Note: *Do not allow polish to come in contact with unpainted plastic surfaces as it could be difficult to remove.*

Note: *Do not apply polish to the windshield or rear window. A contaminated windshield or contaminated wiper blades may lead to increased wiper noise, reduced wipe quality or reduced rain sensor performance.*

CLEANING THE INTERIOR

Note: *Do not allow air fresheners and hand sanitizers to spill on interior surfaces. If a spill occurs, wipe off immediately. Damage may not be covered by the vehicle Warranty.*

Note: *Do not use household cleaning products or glass cleaners, which can stain and discolor the fabric and affect the flame retardant abilities of the seat materials.*

Note: *We recommend distilled water when cleaning.*

Fabric, Carpets, Cloth Seats, Headliners and Floor Mats

Note: *Avoid soaking any surface. Do not use excessive amounts of water to clean the vehicle interior.*

Note: *To avoid spots or discoloration, clean the entire surface.*

To clean:

- Remove dust and loose dirt with a vacuum cleaner or brush.
- Wipe the surface with a soft, damp cloth and a mild soap and water solution. Dry the area with a clean, soft cloth.
- If a ring forms on the fabric after spot cleaning, clean the entire area immediately, but do not soak or the ring will set.

Seatbelts

WARNING: Do not use cleaning solvents, bleach or dye on the vehicle's seatbelts, as these actions may weaken the belt webbing.

WARNING: On vehicles equipped with seat-mounted airbags, do not use chemical solvents or strong detergents. Such products could contaminate the side airbag system and affect performance of the side airbag in a crash.

Note: *Do not use abrasives, or chemical solvents to clean them.*

Note: *Do not allow moisture to penetrate the seatbelt retractor mechanism.*

Cleaning may safely be carried out using mild soap and water. Let them dry naturally, away from artificial heat.

Transit (TTS) Vehicles Built From: 27-01-2020 Vehicles Built Up To: 20-09-2020, CG3796en enGBR, Edition date: 201911, First-Printing

Leather Interior (If Equipped)

Note: *Follow the same procedure as cleaning leather seats for cleaning leather instrument panels and leather interior trim surfaces.*

For routine cleaning, wipe the surface with a soft, damp cloth and a mild soap and water solution. Dry the area with a clean, soft cloth.

For cleaning and removing stains such as dye transfer, use a leather cleaning product for automotive interiors.

Do not use the following products as these may damage the leather:

- Oil and petroleum or silicone-based leather conditioners.
- Household cleaners.
- Alcohol solutions.
- Solvents or cleaners intended specifically for rubber, vinyl and plastics.

Suede Micro Fiber Fabric (If Equipped)

Note: *Do not steam clean.*

Note: *To avoid spots or discoloration, clean the entire surface.*

Do not use the following products:

- Leather care products.
- Household cleaners.
- Alcoholic solutions.
- Spot removers.
- Shoe polish.

To clean:

- Remove dust and loose dirt with a vacuum cleaner.
- Wipe the surface with a soft, damp cloth and a mild soap and water solution. Dry the area with a clean, soft cloth.
- If a ring forms on the fabric after spot cleaning, clean the entire area immediately, but do not soak or the ring will set.

Instrument Cluster Screens, LCD Screens and Radio Screens

Note: *Do not use abrasives, alcoholic solvents or chemical solvents to clean the instrument cluster screens, LCD screens or radio screens. These cleaning products can damage the screens.*

Clean the instrument panel and cluster lens with a clean, damp and soft cloth, then use a clean, dry and soft cloth to dry these areas.

Do not spray any liquid directly onto the screens.

Do not use a microfiber cloth to clean the bezel around the display screens as it could damage the surface.

Rear Windows

Note: *Do not use any abrasive materials to clean the interior of the rear windows.*

Note: *Do not install stickers or labels to the interior of the rear windows.*

Mirrors

Do not clean the housing or glass of any mirror with harsh abrasives, fuel or other petroleum or ammonia-based cleaning products.

Transit (TTS) Vehicles Built From: 27-01-2020 Vehicles Built Up To: 20-09-2020, CG3796en enGBR, Edition date: 201911, First-Printing

Storage Compartments, Cup Holders and Ashtrays

To clean:

- Take out any removable inserts.
- Wipe the surface with a soft, damp cloth and a mild soap and water solution. Dry the area with a clean, soft cloth.

REPAIRING MINOR PAINT DAMAGE

You should repair paintwork damage caused by stones from the road or minor scratches as soon as possible. A choice of products are available from an authorized dealer.

Remove particles such as bird droppings, tree sap, insect deposits, tar spots, road salt and industrial fallout before repairing paint chips.

Always read and follow the manufacturer's instructions before using the products.

CLEANING THE WHEELS

Note: *Do not apply a cleaning chemical to warm or hot wheel rims and covers.*

Note: *Industrial-strength (heavy-duty) cleaners, or cleaning chemicals, in combination with brush agitation to remove brake dust and dirt, could wear away the clear coat finish over a period of time.*

Note: *Do not use hydrofluoric acid-based or high caustic-based wheel cleaners, steel wool, fuels or strong household detergent.*

Note: *If you intend parking your vehicle for an extended period after cleaning the wheels with a wheel cleaner, drive your vehicle for a few minutes before doing so. This will reduce the risk of increased corrosion of the brake discs, brake pads and linings.*

Note: *Some automatic car washes may cause damage to the finish on your wheel rims and covers.*

Alloy wheels and wheel covers are coated with a clear coat paint finish. To maintain their condition we recommend that you:

- Clean them weekly with the recommended wheel and tire cleaner.
- Use a sponge to remove heavy deposits of dirt and brake dust accumulation.
- Rinse them thoroughly with a pressurized stream of water when you have completed the cleaning process.

Consult your authorized dealer for approved cleaning products.

Using other non-recommended cleaning products can result in severe and permanent cosmetic damage.

BODY STYLING KITS

The distance between the underside of your vehicle and the ground is less than that of other models. Drive with extreme care to avoid damage to your vehicle.

Transit (TTS) Vehicles Built From: 27-01-2020 Vehicles Built Up To: 20-09-2020, CG3796en enGBR, Edition date: 201911, First-Printing

GENERAL INFORMATION

The recommended tire inflation pressures are on the tire information label on the driver side B-pillar.

Check and set the tire pressure at the ambient temperature in which you are intending to drive your vehicle and when the tires are cold. See **Tire Pressures** (page 290).

Note: *Check your tire pressures regularly to optimize fuel economy.*

Only use approved wheel and tire sizes. Using other sizes could damage your vehicle and could make the National Type Approval invalid.

Installation of any tires that are not the original equipment tire size can cause the speedometer to display incorrect vehicle speed.

TIRE SEALANT AND INFLATOR KIT

WARNING: Do not use the inflator kit on run flat tires. This could cause loss of vehicle control.

WARNING: Depending on the type and extent of tire damage, some tires can only be partially sealed or not sealed at all. Loss of tire pressure can affect vehicle handling, leading to loss of vehicle control.

WARNING: Do not use the kit on a previously damaged tire, for example when it has been driven under inflated. This could cause loss of vehicle control, personal injury or death.

Note: *Motorhome owners may have to follow separate instructions issued with the temporary mobility kit.*

If your vehicle does not have a spare wheel it has a tire sealant and inflator kit. The kit is in the right-hand side stepwell. Only use the kit supplied with your vehicle.

Note: *: The kit can only temporarily repair one tire puncture with a maximum puncture size of up to 0.24 in (6 mm).*

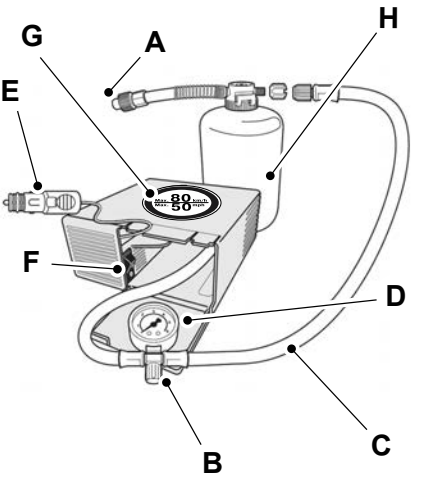

E146784

A	Protective cap
B	Pressure relief valve
C	Hose
D	Pressure gauge
E	Power plug with cable
F	Compressor switch

Transit (TTS) Vehicles Built From: 27-01-2020 Vehicles Built Up To: 20-09-2020, CG3796en enGBR, Edition date: 201911, First-Printing

G Label

H Sealant bottle

Note: *Make sure you regularly check the expiry date on the sealant bottle.*



If the low tire pressure warning lamp illuminates do the following:

1. Gradually reduce the vehicle speed and stop your vehicle as soon as it is safe to do so.
2. Apply the parking brake and switch the ignition off.
3. Check for a punctured tire.

Note: *Do not remove objects, for example nails or screws from a punctured tire.*

Using the Tire Sealant and Inflator Kit

WARNING: Check the sidewall of the tire prior to inflation. If there are any cracks, bumps or similar damage, do not attempt to inflate the tire. This could cause personal injury.

WARNING: Watch the sidewall of the tire when inflating. If any cracks, bumps or similar damage appears, switch the compressor off and let the air out by means of the pressure relief valve. Do not continue driving with this tire. This could cause loss of vehicle control.

WARNING: Do not stand directly beside the tire while the compressor is operating. This could cause personal injury if the tire bursts.

WARNING: Do not leave the kit unattended when it is in use. Failure to follow this instruction could result in personal injury or death.

WARNING: Do not keep the compressor operating for more than 10 minutes. This could cause the compressor to malfunction causing serious personal injury.

WARNING: The sealant contains natural rubber latex. Avoid contact with skin and clothing. If this happens, rinse the affected areas immediately with plenty of water and consult a physician.

1. Open the lid of the tire sealant and inflator kit.
2. Peel off the label G showing the maximum permissible speed of 50 mph (80 km/h) from the casing and attach it to the instrument panel in the driver's field of view. Make sure the label does not obscure anything important.
3. Take the hose C and the power plug with cable E out of the temporary mobility kit.
4. Screw the hose C onto the sealant bottle.
5. Remove the valve cap from the damaged tire.
6. Remove the protective cap A from the sealant bottle hose and screw the hose firmly onto the valve of the damaged tire.
7. Make sure that the compressor switch F is in position 0.
8. Insert the power plug E into the auxiliary power point. See **Auxiliary Power Points** (page 112).
9. Start the engine.
10. Move the compressor switch F to position 1.

Transit (TTS) Vehicles Built From: 27-01-2020 Vehicles Built Up To: 20-09-2020, CG3796en enGBR, Edition date: 201911, First-Printing

11. After a minimum of two minutes move the compressor switch F to position 0 and unscrew the hose C from the sealant bottle. Unscrew the sealant bottle hose from the tire valve.
12. Screw the hose C onto the tire valve and move the compressor switch F to position 1.
13. Inflate the tire for no longer than 10 minutes or to the recommended inflation pressure. Move the compressor switch F to position 0 and check the current tire pressure with pressure gauge D. Unscrew the hose C from the tire valve.
14. Remove the power plug E from the auxiliary power point.
15. Make sure the tire sealant and inflator kit, the bottle lid and the orange cap are stored safely, but still easily accessible in your vehicle. The tire sealant and inflator kit will be required again when you check the tire pressure.
16. Immediately drive approximately six miles (10 kilometers) so that the sealant can seal the damaged area.

Note: *When pumping in the sealant through the tire valve, the pressure may rise up to 87 psi (6 bar) but will drop again after about 30 seconds.*

Note: *: If the tire pressure has dropped to 26 psi (1.8 bar) or below, the tire could be damaged beyond a temporary repair. Have your vehicle immediately checked. Do not drive your vehicle.*

Note: *If the tire pressure has dropped but is still above 26 psi (1.8 bar), use the kit to inflate the tire again.*

After Using the Tire Sealant and Inflator Kit

WARNING: If you experience any unusual vibration, ride disturbance or noise while driving, reduce your speed until you can safely pull off to the side of the road and call for roadside assistance. Failure to do so could cause you to lose control of your vehicle and increase the risk of personal injury or death.

1. Stop your vehicle after driving approximately six miles (10 kilometers). Check, and where necessary, adjust the pressure of the damaged tire.
2. Attach the tire sealant and the inflator kit and check the tire pressure from the pressure gauge D.
3. If the pressure of the sealant-filled tire is more than the recommended pressure, adjust it to the recommended pressure. See **Tire Pressures** (page 290). See **Tire Pressures** (page 290).
4. Follow the inflation procedure once again to inflate the tire.
5. Check the tire pressure again from the pressure gauge D. If the tire pressure is too high, deflate the tire to the specified pressure using the pressure relief valve B.
6. If the tire pressure is less than the recommended pressure, repeat steps 13 to 16 and steps 1 to 5 (Checking the Tire Pressure).
7. Once you have inflated the tire to its correct tire pressure, move the compressor switch F to position 0, remove the power plug E from the auxiliary power point, unscrew the sealant bottle hose, fasten the valve cap and replace the protective cap A.

Transit (TTS) Vehicles Built From: 27-01-2020 Vehicles Built Up To: 20-09-2020, CG3796en enGBR, Edition date: 201911, First-Printing

8. Drive to the nearest tire specialist to get the damaged tire replaced. Before the tire is removed from the wheel, inform the tire specialist that the tire contains sealant. Renew the sealant bottle as soon as possible after it has been used once.

Note: *The temporary mobility kit only provides an emergency repair. Regulations concerning tire repair after using the temporary mobility kit may differ from country to country. You should consult a tire specialist for advice.*

TIRE CARE

Note: *Front tires shown on the left side of the diagram.*

Non-directional tires

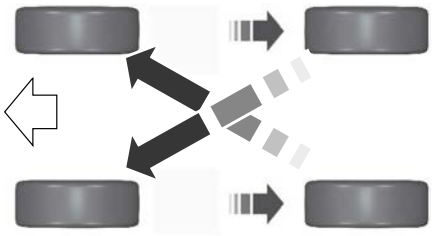

E142547

Directional tires

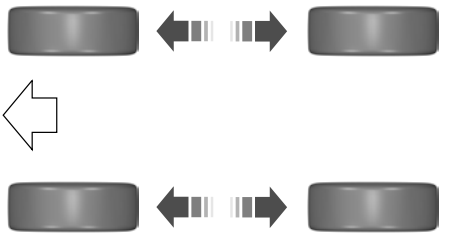

E70415

To make sure the front and rear tires of your vehicle wear evenly and last longer, we recommend that you swap the tires from front to rear and vice versa at regular intervals between 5,000 km (3,000 mi) and 10,000 km (6,000 mi).

WARNING: Do not scrub the sidewalls of the tires when you are parking.

If you have to mount a curb, do so slowly and approach it with the wheels at right-angles to the curb.

Examine the tires regularly for cuts, foreign objects and uneven wear of the tread. Uneven wear could mean that the wheel alignment is outside specification.

Check the tire pressures (including the spare) when cold, every two weeks.

USING SUMMER TIRES

The original equipment tires on your vehicle are designed to optimize its performance in dry or wet summer road conditions. They are not designed for winter use. Do not use the summer tires with snow chains.

USING WINTER TIRES



E278852

Transit (TTS) Vehicles Built From: 27-01-2020 Vehicles Built Up To: 20-09-2020, CG3796en enGBR, Edition date: 201911, First-Printing

We recommend that you use winter or all-season tires carrying this symbol when the temperature is 7ºC (45ºF) or lower, or in snow and ice conditions.

Inflate the winter tires to the same tire pressures as those listed in the tire pressures table. See **Tire Pressures** (page 290).

WARNING: Snow tires must be the same size, load index and speed rating as those originally provided by Ford. Use of any tire or wheel not recommended by Ford can affect the safety and performance of your vehicle, which could result in an increased risk of loss of control, vehicle rollover, personal injury and death. Additionally, the use of non-recommended tires and wheels can cause steering, suspension, axle, transfer case or power transfer unit failure. Follow the Ford recommended tire inflation pressure found on the Safety Compliance Certification Label (on the door hinge pillar, door latch post or the door edge that meets the door latch post, next to the driver seat), or Tire Label on the B-Pillar or the edge of the driver door. Failure to follow the tire pressure recommendations can cause uneven treadwear patterns and adversely affect the way your vehicle handles.

USING SNOW CHAINS

WARNING: Do not exceed 50 km/h (30 mph). Failure to follow this instruction could result in the loss of control of your vehicle, personal injury or death.

WARNING: Do not use snow chains on snow-free roads.

WARNING: Only fit snow chains to specified tires.

WARNING: If your vehicle is fitted with wheel trims, remove them before fitting snow chains.

If you use snow chains or cables, do the following:

- Only use SAE Class S snow chains or cables of 10 mm (0.4 in) or smaller in diameter.

Transit (TTS) Vehicles Built From: 27-01-2020 Vehicles Built Up To: 20-09-2020, CG3796en enGBR, Edition date: 201911, First-Printing

Snow Chain Use by Tire Size

Tire Size	Variant[3]			
	Front Wheel Drive	Rear Wheel Drive - Vehicles With Single Rear Wheels	Rear Wheel Drive - Vehicles With Dual Rear Wheels	All-Wheel Drive
195/75R16C.	X	X	Yes.[1]	X
215/65R15C.	Yes.	X	X	X
215/65R16C.	Use special snow chain use wheel kit 16x5.5J with 185/75R16C 104/102 tires.[4]	X	X	X
205/75R16C.	X	X	Yes.[1]	X
235/65R16C 115/113.	Use special snow chain use wheel kit 16x5.5J with 185/75R16C 104/102 tires.[4]	Yes.	X	Yes.[2]
235/65R16C 121/119.	Use special snow chain use wheel kit 16x5.5J with 195/75R16C 107/105.[4]	Yes.	X	Yes.[2]

[1] Only fit snow chains to the outer tires.

[2] Only fit snow chains to the rear tires.

[3] To ascertain the variant of your vehicle, refer to the vehicle identification plate. See **Vehicle Identification Plate** (page 306).

[4] Alternative wheels that permit the use of snow chains or cables are available to purchase from an authorized dealer as part of a special snow chain use wheel kit.

X Not suitable for use with snow chains.

Note: *Maintain correct tire pressures.*

Note: *The anti-lock brake system continues to correctly operate.*

Note: *We recommend that you switch the traction control system off. See **Using Traction Control** (page 164).*

Do not use self-tensioning snow chains.

Transit (TTS) Vehicles Built From: 27-01-2020 Vehicles Built Up To: 20-09-2020, CG3796en enGBR, Edition date: 201911, First-Printing

TIRE PRESSURE MONITORING SYSTEM

WARNING: The tire pressure monitoring system is not a substitute for manually checking tire pressures. You should periodically check tire pressures using a pressure gauge. Failure to correctly maintain tire pressures could increase the risk of tire failure, loss of control, vehicle rollover and personal injury.



You must check the tire pressures (including the spare tire where applicable) every two weeks when the tires are cold. See **Wheels and Tires** (page 273). The tire pressures are also on the tire inflation pressure label (located on the edge of driver door or the B-Pillar).

As a driver assistance feature, your vehicle has a tire pressure monitoring system. A warning lamp will illuminate when one or more of the tires are significantly under-inflated. If the low tire pressure warning lamp illuminates, you should stop your vehicle as soon as it is safe to do so, check the tires and inflate them to the correct pressure.

Driving on under-inflated tires can:

- Cause them to overheat.
- Lead to tire failure.
- Reduce fuel efficiency.
- Reduce tire life.
- Affect vehicle handling or stopping ability.

The system is not a substitute for correct tire maintenance.

You must maintain the correct tire pressures, even if low tire pressure has not illuminated the warning lamp.

The tire pressure monitoring system has a system malfunction indicator to warn you when the system is not operating correctly. The malfunction indicator and low tire pressure warning lamp have a combined function. When the system detects a malfunction, the warning lamp will flash for approximately one minute and then remain illuminated. This sequence will occur every time you switch the ignition on while the malfunction remains. The system has detected a fault that requires service.

When the malfunction indicator is illuminated, the system may not be able to detect or signal low tire pressures. A malfunction may occur for a variety of reasons, including the installation of a replacement tire or wheel that prevents the system from functioning correctly. Always check the tire pressure monitoring system malfunction warning after replacing one or more tires or wheels on your vehicle. Make sure the replacement tires or wheels allow the system to continue to function correctly. See **When the Temporary Spare Tire is Installed** in this section.

How Temperature Affects the Tire Pressures

Under normal driving conditions tire pressures may increase by up to 0.3 bar (4 psi) from a cold start situation.

If the vehicle is stationary overnight and the temperature significantly lower than the daytime temperature, tire pressures may decrease by up to 0.2 bar (3 psi) when there is a drop in the ambient temperature of 17°C (63°F) or more. The system detects this pressure decrease as being significantly below the correct inflation pressure and the warning lamp illuminates.

Transit (TTS) Vehicles Built From: 27-01-2020 Vehicles Built Up To: 20-09-2020, CG3796en enGBR, Edition date: 201911, First-Printing

When Inflating Tires

When inflating the tires the system may not respond immediately to the air added to the tires.

Only inflate tires when they are cold.

If the warning lamp is on:

- Check each tire to verify that none are flat.
- If one or more tires are flat, repair as necessary.
- Check the tire pressures and inflate all tires to the correct pressure. See **Tire Pressures** (page 290).
- Carry out the tire pressure monitoring system reset procedure.

When Changing Tires



E142549

You should always have tires serviced by an authorized dealer.

Note: *Each road wheel and tire is fitted with a tire pressure sensor located inside the wheel and tire assembly cavity. The pressure sensor attaches to the valve stem. The tire covers the pressure sensor and it is not visible unless the tire is removed. Take care when changing the tire to avoid damaging the sensor.*

When Changing Wheels

When changing the wheels of your vehicle, the tire pressure monitoring system needs to re-learn the tire pressure sensors. To achieve this perform the following:

1. Make sure all tires are inflated to the proper pressure. If not, inflate the tires to the correct pressure. See **Tire Pressures** (page 290).
2. Park your vehicle for at least 20 minutes.
3. Carry out the tire pressure monitoring system reset procedure. See **Tire Pressure Monitoring System Reset Procedure** later in this section.
4. The tire pressure monitoring system will automatically re-learn the tire pressure sensors the next time you drive your vehicle for approximately 15 minutes above 40km/h (25 mph).

Understanding the Tire Pressure Monitoring System

The system measures the pressure in the four road tires and sends the tire pressure readings to your vehicle.

The system detects this lower pressure as being significantly below the correct inflation pressure and the warning lamp illuminates. You must inflate the tires to the correct pressure.

When the Temporary Spare Tire is Installed

If you need to replace a road wheel and tire with the temporary spare wheel, the system will continue to identify a defect. This is to remind you to repair the damaged road wheel and tire and refit the repaired road wheel and tire assembly to your vehicle. To restore the correct operation of the system, you must have the repaired road wheel and tire assembly refitted to your vehicle.

Transit (TTS) Vehicles Built From: 27-01-2020 Vehicles Built Up To: 20-09-2020, CG3796en enGBR, Edition date: 201911, First-Printing

When You Believe the System is Not Operating Correctly

The main function of the system is to warn you when the tire pressures are low. It can also warn you in the event the system is no longer capable of operating correctly. See the following chart for information concerning the system:

Warning lamp	Description	Action
Solid warning lamp	Tire(s) under-inflated	1. Make sure tires are at the correct pressure. See **Wheels and Tires** (page 273). The tire pressures are also on the tire inflation pressure label (located on the edge of driver door or the B-Pillar). 2. After inflating the tires to the correct pressure you must carry out the tire pressure monitoring system reset procedure. See **Tire Pressure Monitoring System Reset Procedure** in this chapter.
	Spare tire in use	Repair the damaged road wheel and tire and refit the repaired road wheel and tire assembly to your vehicle to restore the correct operation of the system.
	Tire pressure monitoring system malfunction	If the tires are correctly inflated and the spare tire is not in use but the light remains on, the system has detected a fault that requires service.
Solid warning lamp initially followed by a flashing warning lamp	Spare tire in use	Repair the damaged road wheel and tire and refit the repaired road wheel and tire assembly to your vehicle to restore the correct operation of the system.
	Tire pressure monitoring system malfunction	If the tires are correctly inflated and the spare tire is not in use but the light remains on, the system has detected a fault that requires service.

Transit (TTS) Vehicles Built From: 27-01-2020 Vehicles Built Up To: 20-09-2020, CG3796en enGBR, Edition date: 201911, First-Printing

Tire Pressure Monitoring System Reset Procedure

Overview

You must carry out the system reset procedure after each tire replacement or adjustment of the tire pressures.

To maintain your vehicle load carrying capability, your vehicle requires different tire pressures in the front tires compared to the rear tires.

The system illuminates the warning lamp at different pressures for the front and rear tires.

If the tires are rotated, the Tire Pressure Monitoring System needs to be reset to relearn the new tire pressures. It does not know which sensor is where and assumes you have set the pressures correctly.

Carrying Out the System Reset Procedure

Switch the ignition on. Using the information display control select:

Message	Description and Action
Settings	Press the **OK** button.
Driver assist	Press the **OK** button.
Tyre monitor	Press and hold the **OK** button until confirmation appears. Alternatively, if your vehicle has a tire pressure monitoring system reset button, press and hold the button until confirmation appears.

CHANGING A ROAD WHEEL

WARNING: Do not fit more than one spare wheel on your vehicle at any one time.

Note: *Vehicles with a temporary mobility kit do not have a spare wheel, vehicle jack or wheel brace.*

Locking Lug Nuts

You can obtain replacement locking lug nuts or a locking lug nut key using the reference number certificate.

The locking lug nut key is located in the glove box or next to the vehicle jack.

Vehicles with a Spare Wheel

The spare wheel is under the rear of your vehicle.

If the spare wheel is the same type and size as your vehicle road wheel, you can fit the spare wheel and continue to drive in the normal manner.

If the spare wheel is not the same type and size as your vehicle road wheel, it has a label showing the maximum driving speed limit.

Transit (TTS) Vehicles Built From: 27-01-2020 Vehicles Built Up To: 20-09-2020, CG3796en enGBR, Edition date: 201911, First-Printing



E145138

1. Open the rear doors and remove the grommet.

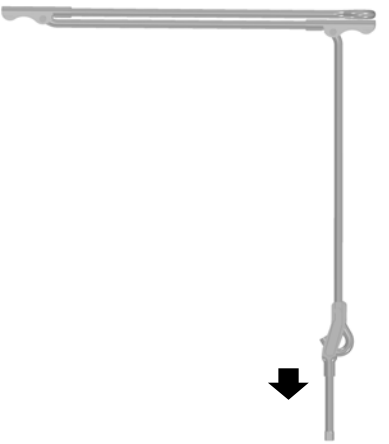

2. Insert the square end of the wheel brace or the short arm of the jack handle into the socket. Turn counterclockwise until the spare wheel rests on the ground and the cable is loose.



E146811

3. Raise the cable end cover.



E146812

4. Rotate the cable through 90 degrees. Slide the cable through the slot to release the spare wheel bracket from the winch.

Transit (TTS) Vehicles Built From: 27-01-2020 Vehicles Built Up To: 20-09-2020, CG3796en enGBR, Edition date: 201911, First-Printing

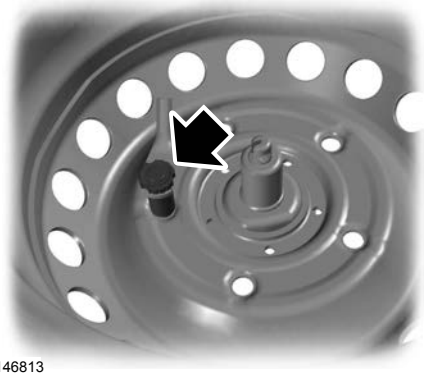

E146813

5. Remove the retaining nut to release the spare wheel bracket.

Vehicle Jack

WARNING: The jack supplied with this vehicle is only intended for changing wheels. Do not use the vehicle jack other than when you are changing a wheel in an emergency.

WARNING: Check that the vehicle jack is not damaged or deformed and the thread is lubricated and clean.

WARNING: Never place anything between the vehicle jack and the ground.

WARNING: Never place anything between the vehicle jack and your vehicle.

WARNING: Make sure that the vehicle jack is vertical to the jacking point and the base is flat on the ground.

WARNING: Do not work on your vehicle when the jack is the only support. If the vehicle slips off the jack, you or someone else could be seriously injured.

280/290/310/330/350/355/370/410, FWD/RWD

The vehicle jack and wheel brace are in a storage compartment in the front right-hand side stepwell.

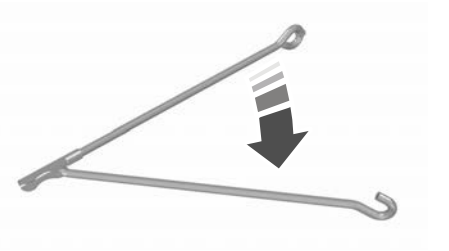

E146837

1. Unfold the jack handle.

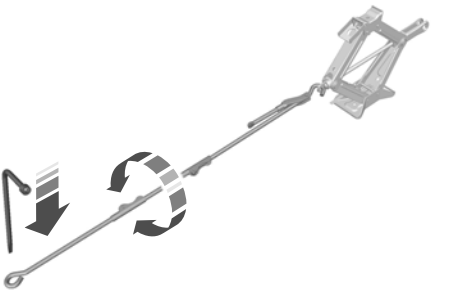

E70958

2. Insert the hook of the jack handle into the ring on the vehicle jack. Insert the wheel brace into the end of the jack handle and rotate it clockwise to raise your vehicle. Rotate the handle counterclockwise to lower your vehicle.

Transit (TTS) Vehicles Built From: 27-01-2020 Vehicles Built Up To: 20-09-2020, CG3796en enGBR, Edition date: 201911, First-Printing

410/430/460/470, RWD

The jack, jack handle and wheel brace are in a storage compartment in the front right-hand side stepwell.



1. Assemble the jack handle.
2. Insert the jack handle into the jack.
3. Insert the end of the jack handle into the wheel brace and rotate clockwise to raise your vehicle.

Front Jacking Points

WARNING: You must use the specified jacking points.

Note: *If your vehicle has rear air conditioning make sure the vehicle jack does not come in contact with the air conditioning lines.*

280/290/310/330/350/355/370/410, FWD/RWD

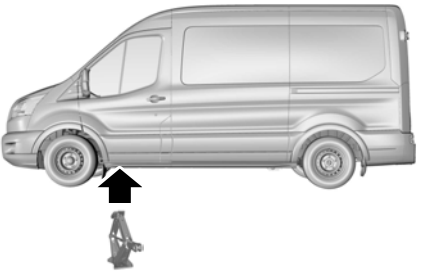

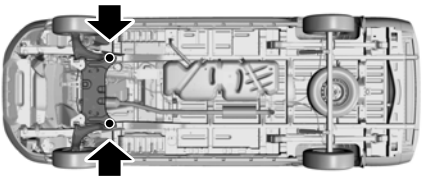

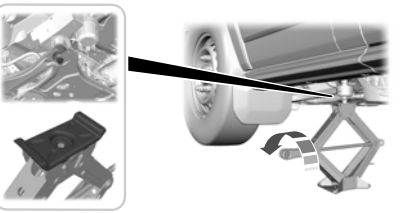

Position the head of the vehicle jack under the front sub-frame rear mounting bolts.

Transit (TTS) Vehicles Built From: 27-01-2020 Vehicles Built Up To: 20-09-2020, CG3796en enGBR, Edition date: 201911, First-Printing

410/430/460/470, RWD

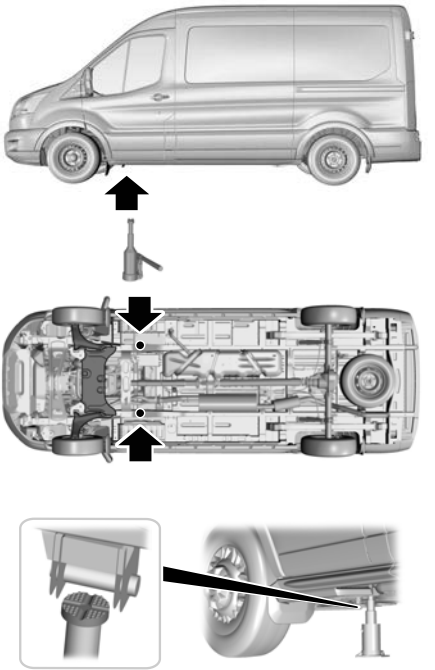

Position the head of the vehicle jack under the protrusions at the rear of front sub-frame.

Rear Jacking Points

WARNING: You must use the specified jacking points.

280/290/310/330/350/355/370/410, FWD/RWD, Excluding: Motorhome Chassis

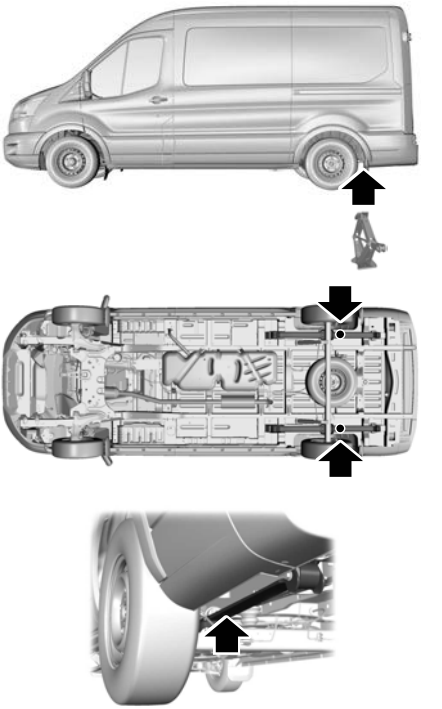

Position the vehicle jack under the rear leaf spring directly behind the rear wheel.

Note: *Position the vehicle jack on the flattest part of the spring and as close to the axle as possible.*

Transit (TTS) Vehicles Built From: 27-01-2020 Vehicles Built Up To: 20-09-2020, CG3796en enGBR, Edition date: 201911, First-Printing

410/430/460/470, RWD

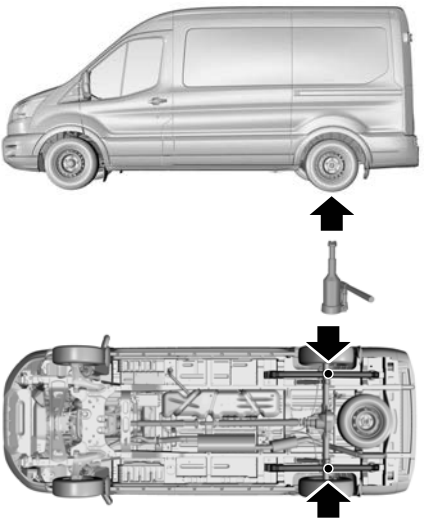

Position the vehicle jack under the rear axle.

350/410, FWD, Motorhome Chassis

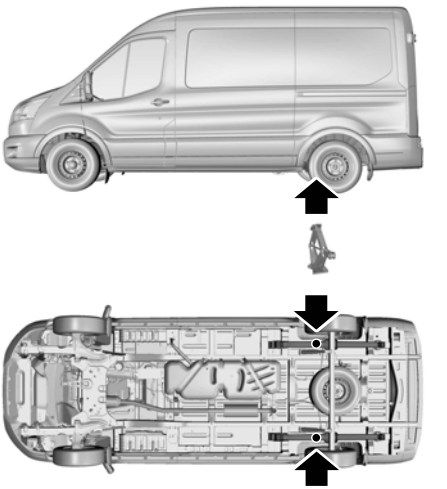

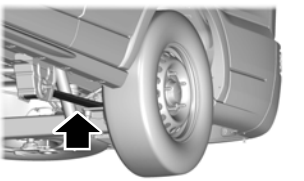

WARNING: Never place anything between the vehicle jack and your vehicle.

Position the vehicle jack under the rear leaf spring directly in front of the rear wheel.

Note: *Position the vehicle jack on the flattest part of the spring and as close to the axle as possible.*

Transit (TTS) Vehicles Built From: 27-01-2020 Vehicles Built Up To: 20-09-2020, CG3796en enGBR, Edition date: 201911, First-Printing

Removing a Road Wheel

WARNING: Park your vehicle so that you do not obstruct the flow of traffic or place yourself in any danger and set up a warning triangle.

WARNING: Switch the ignition off and apply the parking brake.

WARNING: If your vehicle has a manual transmission, shift into first or reverse gear. If your vehicle has an automatic transmission, shift into park (P).

WARNING: Make sure all passengers are out of your vehicle.

WARNING: Make sure that your vehicle is on firm and level ground with the front wheels pointing straight ahead.

Chock the diagonally opposite wheel to the punctured tire with an appropriate block or wheel chock. A wheel chock may be located in the B-pillar, in the storage compartment in the front right-hand side stepwell or inside the spare wheel.

Make sure that the arrows on directional tires point in the direction of rotation when your vehicle is moving forward. If you have to fit a spare wheel and tire with the arrows pointing in the opposite direction have the tire refitted as soon as possible.

1. Insert the flat end of the wheel brace between the wheel rim and the wheel trim and carefully remove the wheel trim.
2. Use the locking lug nut key to loosen the locking lug nut.
3. Loosen the remaining lug nuts, but do not remove them.
4. Raise your vehicle until the tire is clear of the ground.
5. Remove the lug nuts and the road wheel.

Note: *Do not lay alloy road wheels face down on the ground.*

Installing a Road Wheel

WARNING: Use only approved wheel and tire sizes. Using other sizes could damage your vehicle and will make the National Type Approval invalid.

WARNING: Make sure there is no grease or oil on the threads or the surface between the wheel lugs and nuts. This can cause the lug nuts to loosen while driving.

WARNING: Make sure the wheel and hub contact surfaces are clean.

1. Install the wheel.

Transit (TTS) Vehicles Built From: 27-01-2020 Vehicles Built Up To: 20-09-2020, CG3796en enGBR, Edition date: 201911, First-Printing

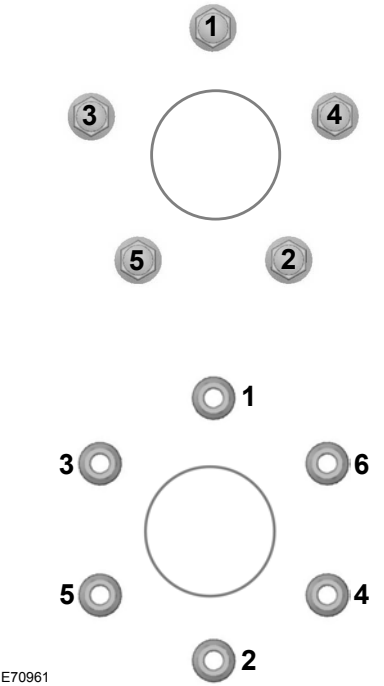

E70961

2. Install all of the lug nuts and partially tighten them in the sequence shown.
3. Lower your vehicle and remove the vehicle jack.
4. Fully tighten all of the lug nuts in the sequence shown.
5. Install the wheel trim.

Note: *Make sure that the cones on the lug nuts are against the wheel.*

Note: *Alloy wheel lug nuts are suitable for use on a steel spare wheel.*

Note: *If the spare wheel is not the same type and size as your vehicle road wheel replace it as soon as possible.*

Note: *Check the lug nuts for correct tightness and check the tire pressure as soon as possible.*

Stowing the Wheel and Vehicle Jack

1. Attach the spare wheel bracket to the wheel using the retaining nut.
2. Slide the cable through the slot and attach the spare wheel bracket to the winch.
3. Rotate the cable through 90 degrees and lower the cable end cover.


E145138

4. Insert the square end of the wheel brace or the short arm of the jack handle into the socket.

Note: *Do not raise the spare wheel bracket without a wheel attached. If you lower the spare wheel bracket without a wheel attached, you may damage the winch mechanism.*

Note: *Make sure the spare wheel is secure by tightening the winch until you feel a slip.*

5. Stow the vehicle jack, jack handle and wheel brace in their correct locations and secure them with the straps.

Transit (TTS) Vehicles Built From: 27-01-2020 Vehicles Built Up To: 20-09-2020, CG3796en enGBR, Edition date: 201911, First-Printing

TIRE PRESSURES - VAN

The recommended tire inflation pressures are on the tire information label on the driver side B-pillar.

Check all tire pressures when they are cold, at least once every two weeks.

Note: *You may need to remove the spare wheel from the spare wheel carrier to check the tire pressure.*

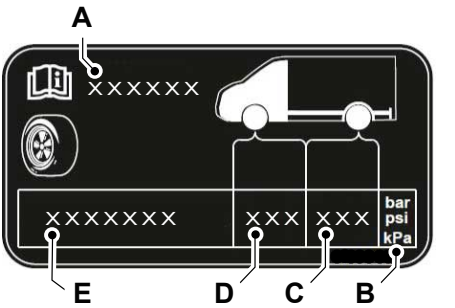

E254055

A	Vehicle model.
B	Measure unit.
C	Rear tire pressure.
D	Front tire pressure.
E	Tire size.

Van, Kombi-Van and Kombi (front wheel drive)

Variant[1]	Tire Size	Front bar (psi)	Rear bar (psi)
280 M	215/65R15C	3.5 (51)	3.3 (48)
280 M	215/65R16C	3.7 (54)	3.6 (52)
290 M	215/65R15C	3.5 (51)	3.3 (48)
290 M	215/65R16C	3.7 (54)	3.6 (52)
310 M	215/65R15C	3.5 (51)	3.7 (54)
310 M	215/65R16C	3.8 (55)	4 (58)
310 L	215/65R15C	3.75 (54)	3.7 (54)
310 L	215/65R16C	4 (58)	4 (58)
330 M 330 L	235/65R16C	3.3 (48)	4 (58)

Transit (TTS) Vehicles Built From: 27-01-2020 Vehicles Built Up To: 20-09-2020, CG3796en enGBR, Edition date: 201911, First-Printing

Variant[1]	Tire Size	Front bar (psi)	Rear bar (psi)
350 M	235/65R16C	3.3 (48)	4.2 (61)
350 L	235/65R16C	3.3 (48)	4.5 (65)

[1] To ascertain the variant of your vehicle, refer to the vehicle identification plate. See **Vehicle Identification Plate** (page 306).

Van, Kombi-Van and Kombi (rear wheel drive and all-wheel drive)

Variant[1]	Tire Size	Front bar (psi)	Rear bar (psi)
310 L	235/65R16C	3.3 (48)	3.2 (46)
330 S	235/65R16C	3.1 (45)	4 (58)
330 S. Vehicles with all-wheel drive	235/65R16C	3.5 (51)	4 (58)
350 L 370 L 350 L-E Jumbo Vehicles with maximum front axle weight 1,750 kg (3,858 lb)	235/65R16C	3.3 (48)	4.5 (65)
350 L 370 L 350 L-E Jumbo Vehicles with maximum front axle weight 1,850 kg (4,079 lb)	235/65R16C	3.5 (51)	4.5 (65)
350 M Vehicles with maximum front axle weight 1,750 kg (3,858 lb)	235/65R16C	3.3 (48)	4.2 (61)
350 M Vehicles with maximum front axle weight 1,850 kg (4,079 lb)	235/65R16C	3.5 (51)	4.2 (61)
410 L	235/65R16C	3.5 (51)	5 (73)

[1] To ascertain the variant of your vehicle, refer to the vehicle identification plate. See **Vehicle Identification Plate** (page 306).

Transit (TTS) Vehicles Built From: 27-01-2020 Vehicles Built Up To: 20-09-2020, CG3796en enGBR, Edition date: 201911, First-Printing

Chassis Cab (front wheel drive)

Variant[1]	Tire Size	Front bar (psi)	Rear bar (psi)
310 M	215/65R16C	3.8 (55)	4 (58)
330 M 330 L	235/65R16C	3.3 (48)	4 (58)
350 M	235/65R16C	3.3 (48)	4.2 (61)
350 L 350 E-L Jumbo 370 M	235/65R16C	3.3 (48)	4.5 (65)

[1] To ascertain the variant of your vehicle, refer to the vehicle identification plate. See **Vehicle Identification Plate** (page 306).

Chassis Cab (rear wheel drive)

Variant[1]	Tire Size	Front bar (psi)	Rear bar (psi)
310 S	235/65R16C	2.9 (42)	3.2 (46)
330 S	235/65R16C	3.1 (45)	4 (58)
330 S Vehicles with all-wheel drive	235/65R16C	3.5 (51)	4 (58)
350 E 350 L 350 L-E Jumbo 350 ELWB-EL Super Jumbo 370 M Vehicles with maximum front axle weight 1,750 kg (3,858 lb)	235/65R16C	3.3 (48)	4.5 (65)
350 E 350 L 350 L-E Jumbo 350 ELWB-EL Super Jumbo 370 M Vehicles with maximum front axle weight 1,850 kg (4,079 lb)	235/65R16C	3.5 (51)	4.5 (65)

Transit (TTS) Vehicles Built From: 27-01-2020 Vehicles Built Up To: 20-09-2020, CG3796en enGBR, Edition date: 201911, First-Printing

Variant[1]	Tire Size	Front bar (psi)	Rear bar (psi)
350 M Vehicles with maximum front axle weight 1,750 kg (3,858 lb)	235/65R16C	3.3 (48)	4.2 (61)
350 M Vehicles with maximum front axle weight 1,850 kg (4,079 lb)	235/65R16C	3.5 (51)	4.2 (61)

[1] To ascertain the variant of your vehicle, refer to the vehicle identification plate. See **Vehicle Identification Plate** (page 306).

Van, Kombi and Chassis Cab (dual rear wheel)

Variant[1]	Tire Size	Front bar (psi)	Rear bar (psi)
350 S 350 M 350 L 350 L-E (derated 470) 350 L-E Jumbo 350 ELWB-EL Super Jumbo	195/75R16C	4.6 (67)	3 (44)
355 M 355 L 355 L-E Jumbo	195/75R16C	4.6 (67)	3 (44)
410 L 410 L-E Jumbo (derated 470)	195/75R16C	4.6 (67)	3.2 (46)
430 L 430 L-E Jumbo 430 ELWB-EL Super Jumbo	195/75R16C	4.6 (67)	3.8 (55)
460 LWB-E Jumbo	195/75R16C	4.6 (67)	3.9 (57)
470 M 470 L 470 L-E Jumbo 470 ELWB-EL Super Jumbo	195/75R16C	4.6 (67)	4.3 (62)
470 LWB-E Jumbo Van, Single chassis cab and Double chassis cab Vehicles with maximum rear axle weight 3,100 kg (6,834 lb)	195/75R16C	4.6 (67)	4 (58)

Transit (TTS) Vehicles Built From: 27-01-2020 Vehicles Built Up To: 20-09-2020, CG3796en enGBR, Edition date: 201911, First-Printing

Variant[1]	Tire Size	Front bar (psi)	Rear bar (psi)
470 LWB-E Super Jumbo Van, Single chassis cab and Double chassis cab Vehicles with maximum rear axle weight 3,100 kg (6,834 lb)	195/75R16C	4.6 (67)	4 (58)
510 M 510 L 510 L-E Jumbo 510 ELWB-EL Super Jumbo	205/75R16C	4.8 (70)	4.1 (59)

[1] To ascertain the variant of your vehicle, refer to the vehicle identification plate. See **Vehicle Identification Plate** (page 306).

Skeletal Chassis Vehicles (SVO, Motorhomes)

Variant[1]	Tire Size	Front bar (psi)	Rear bar (psi)
350 L 350 L-E Jumbo 350 ELWB-EL Super Jumbo	235/65R16C	3.5 (51)	4.5 (65)
350 M	235/65R16C	3.5 (51)	4.2 (61)
410 L 410 L-E Jumbo	235/65R16C	3.4 (49)	4.9 (71)
430 L-E Jumbo 430 ELWB-EL Super Jumbo	235/65R16C	3.4 (49)	4.9 (71)

[1] To ascertain the variant of your vehicle, refer to the vehicle identification plate. See **Vehicle Identification Plate** (page 306).

Transit (TTS) Vehicles Built From: 27-01-2020 Vehicles Built Up To: 20-09-2020, CG3796en enGBR, Edition date: 201911, First-Printing

TIRE PRESSURES - BUS

The recommended tire inflation pressures are on the tire information label on the driver side B-pillar.

Check all tire pressures when they are cold, at least once every two weeks.

Note: *You may need to remove the spare wheel from the spare wheel carrier to check the tire pressure.*

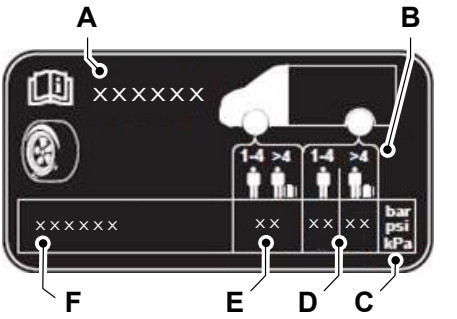

E254145

A Vehicle model.
B Vehicle load.
C Measure unit.
D Rear tire pressure.
E Front tire pressure.
F Tire size.

Variant[1]	Tire Size	Front bar (psi)	Rear bar (psi)
350 M. Vehicles with maximum front axle weight 1,750 kg (3,858 lb).	235/65R16C.	3.3 (48)	4.1 (60)
350 M. Vehicles with maximum front axle weight 1,850 kg (4,079 lb).	235/65R16C.	3.5 (51)	4.1 (60)
370 M. Vehicles with maximum front axle weight 1,750 kg (3,858 lb).	235/65R16C.	3.3 (48)	4.5 (65)
370 M. Vehicles with maximum front axle weight 1,850 kg (4,079 lb).	235/65R16C.	3.5 (51)	4.5 (65)
410 L.	235/65R16C.	3.4 (49)	4.9 (71)

Transit (TTS) Vehicles Built From: 27-01-2020 Vehicles Built Up To: 20-09-2020, CG3796en enGBR, Edition date: 201911, First-Printing

Variant[1]	Tire Size	Front bar (psi)	Rear bar (psi)
440 LWB-E Jumbo.	235/65R16C.	3.5 (51)	5.75 (83)
460 LWB-E.	195/75R16C.	4.6 (67)	4 (58)

[1] To ascertain the variant of your vehicle, refer to the vehicle identification plate. See **Vehicle Identification Plate** (page 306).

Transit (TTS) Vehicles Built From: 27-01-2020 Vehicles Built Up To: 20-09-2020, CG3796en enGBR, Edition date: 201911, First-Printing

LUG NUTS

Lug Nut Torque

WARNING: When you install a wheel, always remove any corrosion, dirt or foreign materials present on the mounting surfaces of the wheel or the surface of the wheel hub, brake drum or brake disc that contacts the wheel. Make sure to secure any fasteners that attach the rotor to the hub so they do not interfere with the mounting surfaces of the wheel. Installing wheels without correct metal-to-metal contact at the wheel mounting surfaces can cause the wheel nuts to loosen and the wheel to come off while your vehicle is in motion, resulting in loss of vehicle control, personal injury or death.

Bolt size	Nm (lb.ft)
M14 x 1.5	204 (150)

Locking Lug Nuts

You can obtain a replacement locking lug nut key and replacement locking lug nuts from an authorized dealer using the reference number certificate.

Transit (TTS) Vehicles Built From: 27-01-2020 Vehicles Built Up To: 20-09-2020, CG3796en enGBR, Edition date: 201911, First-Printing

VEHICLE DIMENSIONS - BUS/KOMBI/VAN

Medium Wheelbase

Dimension Description	Dimension mm (in)
Overall length.	5,531 (217.8)
Overall width including the exterior mirrors.	2,474 (97.4)
Overall width excluding the exterior mirrors.	2,059–2,126 (81.1–83.7)
Overall height excluding the antenna.	2,490–2,789 (98.0–109.8)
Wheelbase.	3,300 (129.9)
Front track.	1,732–1,752 (68.2–69.0)
Rear track.	1,743–1,779 (68.6–70.0)

Long Wheelbase

Dimension Description	Dimension mm (in)
Overall length.	5,771–6,140 (227.2–241.7)
Overall width including the exterior mirrors.	2,474 (97.4)
Overall width excluding the exterior mirrors.	2,059–2,126 (81.1–83.7)
Overall height excluding the antenna.	2,524–2,546 (99.4–100.2)
Wheelbase.	3,750 (147.6)
Front track.	1,732 (68.2)
Rear track.	1,743 (68.6)

Long Wheelbase With an Extended Frame

Dimension Description	Dimension mm (in)
Overall length.	6,704 (263.9)
Overall width including the exterior mirrors.	2,474 (97.4)
Overall width excluding the exterior mirrors.	2,059–2,126 (81.1–83.7)
Overall height excluding the antenna.	2,781 (109.5)

Transit (TTS) Vehicles Built From: 27-01-2020 Vehicles Built Up To: 20-09-2020, CG3796en enGBR, Edition date: 201911, First-Printing

Dimension Description	Dimension mm (in)
Wheelbase.	3,750 (147.6)
Front track.	1,732–1,752 (68.2–69.0)
Rear track.	1,743 (68.6)

VEHICLE DIMENSIONS - CHASSIS CAB/CHASSIS DOUBLE CAB

Short Wheelbase

Dimension Description	Dimension mm (in)
Overall length.	5,205 (204.9)
Overall width including the exterior mirrors.	2,474 (97.4)
Overall width excluding the exterior mirrors.	2,098–2,198 (82.6–86.5)
Overall height excluding the antenna.	2,192–2,219 (86.3–87.4)
Wheelbase.	3,137 (123.5)
Front track.	1,732–1,752 (68.2–69.0)
Rear track.	1,743–1,763 (68.6–69.4)

Medium Wheelbase

Dimension Description	Dimension mm (in)
Overall length.	5,572 (219.4)
Overall width including the exterior mirrors.	2,474–2,746 (97.4–108.1)
Overall width excluding the exterior mirrors.	2,098–2,198 (82.6–86.5)
Overall height excluding the antenna.	2,176–2,214 (85.7–87.2)
Wheelbase.	3,504 (138.0)
Front track.	1,732–1,752 (68.2–69.0)
Rear track.	1,743–1,763 (68.6–69.4)

Transit (TTS) Vehicles Built From: 27-01-2020 Vehicles Built Up To: 20-09-2020, CG3796en enGBR, Edition date: 201911, First-Printing

Long Wheelbase

Dimension Description	Dimension mm (in)
Overall length.	6,022 (237.1)
Overall width including the exterior mirrors.	2,474–2,746 (97.4–108.1)
Overall width excluding the exterior mirrors.	2,098–2,198 (82.6–86.5)
Overall height excluding the antenna.	2,183–2,207 (85.9–86.9)
Wheelbase.	3,954 (155.7)
Front track.	1,732–1,752 (68.2–69.0)
Rear track.	1,743–1,763 (68.6–69.4)

Long Wheelbase Single Chassis Cab With an Extended Frame

Dimension Description	Dimension mm (in)
Overall length.	6,797 (267.6)
Overall width including the exterior mirrors.	2,474–2,746 (97.4–108.1)
Overall width excluding the exterior mirrors.	2,098–2,198 (82.6–86.5)
Overall height excluding the antenna.	2,338 (92.0)
Wheelbase.	3,954 (155.7)
Front track.	1,740 (68.5)
Rear track.	1,670 (65.7)

Long Wheelbase Double Chassis Cab

Dimension Description	Dimension mm (in)
Overall length.	6,587 (259.3)
Overall width including the exterior mirrors.	2,474–2,746 (97.4–108.1)
Overall width excluding the exterior mirrors.	2,098–2,198 (82.6–86.5)
Overall height excluding the antenna.	2,349 (92.5)

Transit (TTS) Vehicles Built From: 27-01-2020 Vehicles Built Up To: 20-09-2020, CG3796en enGBR, Edition date: 201911, First-Printing

Dimension Description	Dimension mm (in)
Wheelbase.	3,954 (155.7)
Front track.	1,740 (68.5)
Rear track.	1,670 (65.7)

Extra Long Wheelbase Single Chassis Cab With an Extended Frame

Dimension Description	Dimension mm (in)
Overall length.	7,577 (298.3)
Overall width including the exterior mirrors.	2,474–2,746 (97.4–108.1)
Overall width excluding the exterior mirrors.	2,098–2,198 (82.6–86.5)
Overall height excluding the antenna.	2,195–2,197 (86.4–86.5)
Wheelbase.	4,522 (178.0)
Front track.	1,740 (68.5)
Rear track.	1,670 (65.7)

Extra Long Wheelbase Double Chassis Cab With an Extended Frame

Dimension Description	Dimension mm (in)
Overall length.	7,394 (291.1)
Overall width including the exterior mirrors.	2,474–2,746 (97.4–108.1)
Overall width excluding the exterior mirrors.	2,098–2,198 (82.6–86.5)
Overall height excluding the antenna.	2,187–2,218 (86.1–87.3)
Wheelbase.	4,522 (178.0)
Front track.	1,740 (68.5)
Rear track.	1,670 (65.7)

Transit (TTS) Vehicles Built From: 27-01-2020 Vehicles Built Up To: 20-09-2020, CG3796en enGBR, Edition date: 201911, First-Printing

TOWBAR DIMENSIONS - BUS/KOMBI/VAN

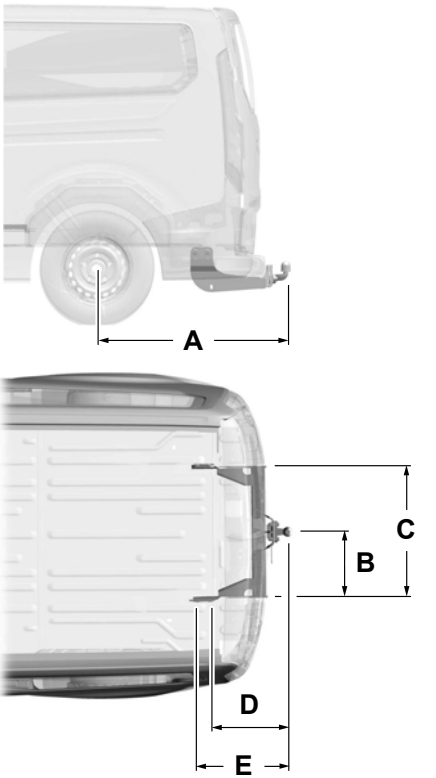

E148831

Transit (TTS) Vehicles Built From: 27-01-2020 Vehicles Built Up To: 20-09-2020, CG3796en enGBR, Edition date: 201911, First-Printing

Medium or Long Wheelbase

Measurement	Dimension Description	mm (in)
A	Wheel center to center of tow ball.	1,344–1,381 (52.9–54.4)
B	Center of tow ball to side member.	417 (16.4)
C	Distance between side members.	839 (33.0)
D	Center of tow ball to center of first attachment point.	619–666 (24.4–26.2)
E	Center of tow ball to center of second attachment point.	704–741 (27.7–29.2)

Long Wheelbase - Extended Frame

Measurement	Dimension Description	mm (in)
A	Wheel center to center of tow ball.	2,105 (82.9)
B	Center of tow ball to side member.	417 (16.4)
C	Distance between side members.	839 (33.0)
D	Center of tow ball to center of first attachment point.	629–666 (24.8–26.2)
E	Center of tow ball to center of second attachment point.	704–741 (27.7–29.2)

Maximum Permissible Trailer Vertical Weight

kg (lb)
140 (309)

Transit (TTS) Vehicles Built From: 27-01-2020 Vehicles Built Up To: 20-09-2020, CG3796en enGBR, Edition date: 201911, First-Printing

TOWBAR DIMENSIONS - CHASSIS CAB/CHASSIS DOUBLE CAB

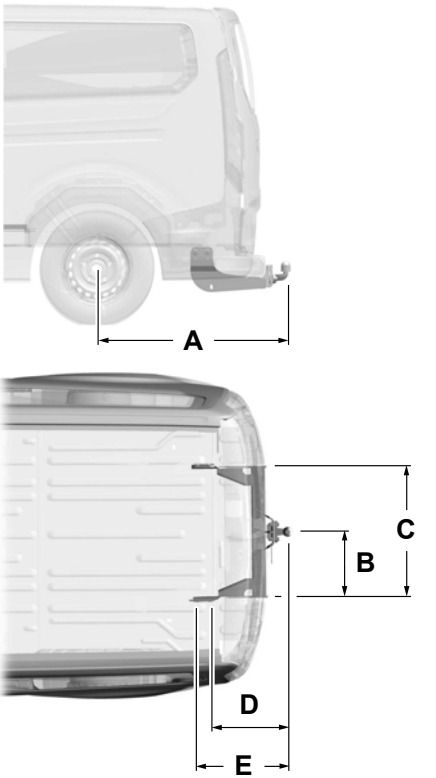

E148831

Transit (TTS) Vehicles Built From: 27-01-2020 Vehicles Built Up To: 20-09-2020, CG3796en enGBR, Edition date: 201911, First-Printing

Short, Medium or Long Wheelbase

Measurement	Dimension Description	mm (in)
A	Wheel center to center of tow ball.	1,178 (46.4)
B	Center of tow ball to side member.	416 (16.4)
C	Distance between side members.	832 (32.8)
D	Center of tow ball to center of first attachment point.	237 (9.3)
E	Center of tow ball to center of second attachment point.	343.5 (13.5)

Long Wheelbase - Extended Frame

Measurement	Dimension Description	mm (in)
A	Wheel center to center of tow ball.	1,735 (68.3)
B	Center of tow ball to side member.	416 (16.4)
C	Distance between side members.	832 (32.8)
D	Center of tow ball to center of first attachment point.	237 (9.3)
E	Center of tow ball to center of second attachment point.	343.5 (13.5)

Extra Long Wheelbase - Extended Frame

Measurement	Dimension Description	mm (in)
A	Wheel center to center of tow ball.	2,165 (85.2)
B	Center of tow ball to side member.	416 (16.4)
C	Distance between side members.	832 (32.8)
D	Center of tow ball to center of first attachment point.	237 (9.3)
E	Center of tow ball to center of second attachment point.	343.5 (13.5)

Transit (TTS) Vehicles Built From: 27-01-2020 Vehicles Built Up To: 20-09-2020, CG3796en enGBR, Edition date: 201911, First-Printing

Maximum Permissible Trailer Vertical Weight	kg (lb)
	140 (309)

VEHICLE IDENTIFICATION PLATE

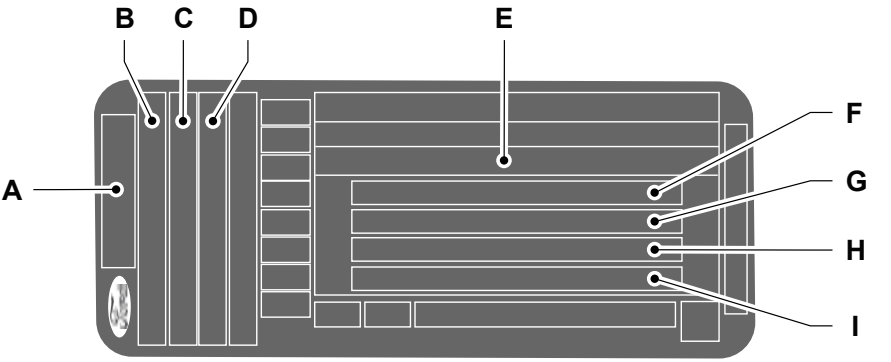

A Model.
B Variant.
C Engine designation.
D Engine power and emission level.
E Vehicle identification number.
F Gross vehicle weight.
G Gross train weight.
H Maximum front axle weight.
I Maximum rear axle weight.

The vehicle identification plate is within the right-hand door aperture.

Note: *The vehicle identification plate may vary to that shown.*

Note: *Information on the vehicle identification plate is dependent upon market requirements.*

Transit (TTS) Vehicles Built From: 27-01-2020 Vehicles Built Up To: 20-09-2020, CG3796en enGBR, Edition date: 201911, First-Printing

VEHICLE IDENTIFICATION NUMBER

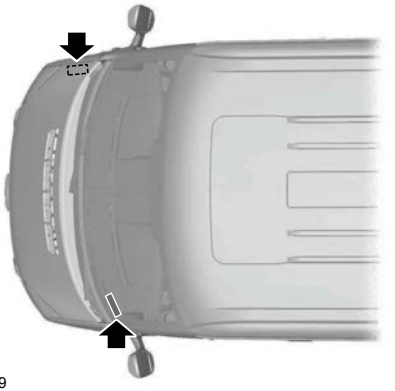

E71369

The vehicle identification number is located on the left-hand side of the instrument panel. You will also find it stamped into the right-hand front wheel arch.

CAPACITIES AND SPECIFICATIONS

Use oil and fluid that meets the defined specification and viscosity grade.

If you do not use oil and fluid that meets the defined specification and viscosity grade, it could result in:

- Component damage not covered by the vehicle Warranty.
- Longer engine cranking periods.
- Increased emission levels.
- Reduced engine performance.
- Reduced fuel economy.
- Reduced brake performance.

Air Conditioning System

WARNING: The air conditioning refrigerant system contains refrigerant under high pressure. Only qualified personnel should service the air conditioning refrigerant system. Opening the air conditioning refrigerant system can cause personal injury.

Variant	Global Warming Potential	CO_2 Equivalent
Vehicles without rear climate control.	1430	1.06 tonnes
Vehicles with rear climate control.	1430	1.65 tonnes

Capacities

Variant	Refrigerant	Refrigerant Oil
Vehicles without rear climate control.	0.74 kg (26.1 oz)	280 cm^3 (9.5 fl oz)
Vehicles with rear climate control.	1.15 kg (40.6 oz)	640 cm^3 (21.6 fl oz)

Transit (TTS) Vehicles Built From: 27-01-2020 Vehicles Built Up To: 20-09-2020, CG3796en enGBR, Edition date: 201911, First-Printing

Materials

Name	Specification
Refrigerant - R-134A	WSH-M17B19-A
Compressor Oil - Air Conditioning 6U7J-M1C231-CA	WSH-M1C231-B

Engine

Engine Oil

Capacities

Variant	Including the Oil Filter	Excluding the Oil Filter
FWD	9.8 L (2.2 gal)	9.2 L (2.0 gal)
AWD/RWD	11.5 L (2.5 gal)	11.1 L (2.4 gal)

Note: *The quantity of engine oil required to raise the indicated level on the dipstick from minimum to maximum is 2 L (0.4 gal).*

Materials

Name	Specification
Engine Oil - SAE 0W-30	WSS-M2C950-A

Engine Oil Top-Up

If you are unable to find engine oil that meets the specification defined by WSS-M2C950-A, you can top-up with a SAE 0W-30 engine oil that is defined by ACEA C2.

Note: *Do not use more than 1 L (0.2 gal) of the alternative engine oil between scheduled service intervals.*

Transit (TTS) Vehicles Built From: 27-01-2020 Vehicles Built Up To: 20-09-2020, CG3796en enGBR, Edition date: 201911, First-Printing

Engine Coolant

Capacities

Variant	Quantity
FWD vehicles without a fuel fired heater or an auxiliary heater.	11.2 L (2.5 gal)
FWD vehicles with a fuel fired heater.	12 L (2.6 gal)
FWD vehicles with an auxiliary heater.	13.3 L (2.9 gal)
FWD vehicles with a fuel fired heater and an auxiliary heater.	13.7 L (3.0 gal)
AWD/RWD vehicles without a fuel fired heater or an auxiliary heater.	10.4 L (2.3 gal)
AWD/RWD vehicles with a fuel fired heater.	11.7 L (2.6 gal)
AWD/RWD vehicles with an auxiliary heater.	11.8 L (2.6 gal)
AWD/RWD vehicles with a fuel fired heater and an auxiliary heater.	13.4 L (2.9 gal)

Materials

Name	Specification
Antifreeze Super Plus Premium FU7J-19544-xx	WSS-M97B44-D
Antifreeze Super Plus Premium Ready Mix 2U2J-19544-xxxx	WSS-M97B44-D2

Fuel Tank

Capacities

Variant	Quantity
Vehicles with standard fuel tank.	70 L (15.4 gal)
Vehicles with larger fuel tank.	95 L (20.9 gal)

Transit (TTS) Vehicles Built From: 27-01-2020 Vehicles Built Up To: 20-09-2020, CG3796en enGBR, Edition date: 201911, First-Printing

Washer Reservoir

Capacities

Variant	Quantity
All.	4.5 L (1.0 gal)

Materials

Name	Specification
Screen Wash FU7J-19C544-AA/BA/DA/EA/GA/HA	WSS-M14P19-A

Diesel Exhaust Fluid (AdBlue) Tank

Capacities

Variant	Quantity
All.	24 L (5.3 gal)

Brake System

Materials

Name	Specification
Brake Fluid DOT 4 LV High Performance BU7J-M6C65-xxxx	WSS-M6C65-A2

BULB SPECIFICATION CHART - VEHICLES WITH: HALOGEN HEADLAMPS

Exterior Lamps

Lamp	Specification	Power (watt)
Body side marker lamp.	W5W	5
Rear lamp and stoplamp.	P21/5W	21/5
High mounted stoplamp.	LED.	LED.

Transit (TTS) Vehicles Built From: 27-01-2020 Vehicles Built Up To: 20-09-2020, CG3796en enGBR, Edition date: 201911, First-Printing

Lamp	Specification	Power (watt)
Chassis cab rear marker lamp.	W5W	5
Cornering lamp.	H1	55
Front direction indicator lamp.	PY21W	21
Front fog lamp.	H11	55
Front side lamp.[1]	W5W	5
Headlamp high beam and daytime running lamp.	H15	55/15
License plate lamp.	W5W	5
Headlamp low beam.	H7	55
Rear direction indicator lamp.	PY21W	21
Rear fog lamp.	P21W	21
Reversing lamp.	P21W	21
Roof outline marker lamp.	W5W	5
Side repeater lamp - high watt.	W16W	16
Side repeater lamp - low watt.	WY5W	5
Rear floodlamp.	LED.	LED.

[1] Front side lamps are also available as LED lamps.
Note: *If the LED fails have your vehicle checked as soon as possible.*

Interior Lamps

Lamp	Specification	Power (watt)
Front interior lamp.	W6W	6
Front interior lamp - with category 1 alarm.	Festoon	6
Luggage compartment lamp.	211 Festoon	10
Map reading lamp.	W6W	6
Side door entrance lamp.	211 Festoon	10

Note: *If the LED fails have your vehicle checked as soon as possible.*

Transit (TTS) Vehicles Built From: 27-01-2020 Vehicles Built Up To: 20-09-2020, CG3796en enGBR, Edition date: 201911, First-Printing

BULB SPECIFICATION CHART - VEHICLES WITH: HIGH INTENSITY DISCHARGE HEADLAMPS

Exterior Lamps

Lamp	Specification	Power (watt)
Body side marker lamp.	W5W	5
Rear lamp and stoplamp.	P21/5W	21/5
High mounted stoplamp.	LED.	LED.
Chassis cab rear marker lamp.	W5W	5
Cornering lamp.	H11	55
Front direction indicator lamp.	PY24W	24
Front fog lamp.	H8	35
Front side lamp.	LED.	LED.
Daytime running lamps.	LED.	LED.
License plate lamp.	W5W	5
Headlamp low beam and headlamp high beam.	D5S	25
Rear direction indicator lamp.	PY21W	21
Rear fog lamp.	P21W	21
Reversing lamp.	P21W	21
Roof outline marker lamp.	W5W	5
Side repeater lamp - high watt.	W16W	16
Side repeater lamp - low watt.	WY5W	5
Rear floodlamp.	LED.	LED.

Note: *If the LED fails have your vehicle checked as soon as possible.*

Transit (TTS) Vehicles Built From: 27-01-2020 Vehicles Built Up To: 20-09-2020, CG3796en enGBR, Edition date: 201911, First-Printing

Interior Lamps

Lamp	Specification	Power (watt)
Front interior lamp.	W6W	6
Front interior lamp - with category 1 alarm.	Festoon	6
Luggage compartment lamp.	211 Festoon	10
Map reading lamp.	W6W	6
Side door entrance lamp.	211 Festoon	10

Note: *If the LED fails have your vehicle checked as soon as possible.*

Transit (TTS) Vehicles Built From: 27-01-2020 Vehicles Built Up To: 20-09-2020, CG3796en enGBR, Edition date: 201911, First-Printing

FUEL CONSUMPTION FIGURES

Fuel Economy and CO2 Emissions

The declared fuel/energy consumptions, CO2-Emissions and electric range are determined according to the technical requirements and specifications of the European Regulations (EC) 715/2007 and (EU) 2017/1151 as last amended. Light Duty Vehicle type-approved using the World Harmonised Light Vehicle Test Procedure (WLTP) will have Fuel/Energy Consumption and CO2-Emission information for New European Drive Cycle (NEDC) and WLTP. WLTP will fully replace the NEDC latest by the end of the year 2020. The applied standard test procedures enable comparison between different vehicle types and different manufacturers.

During NEDC phase-out, WLTP fuel consumption and CO2 emissions are being correlated back to NEDC. There will be some variance to the previous fuel economy and emissions as some elements of the tests have altered, so the same car might have different fuel consumption and CO2 emissions.

European Directive 1999/94/EC

In addition to the fuel efficiency of a car, driving behaviour as well as other non-technical factors play a role in determining a car's fuel consumption and CO2 emissions. CO2 is the main greenhouse gas responsible for global warming. A guide on fuel economy and CO2 emissions which contains data for all new passenger car models is available at any point of sale free of charge.

FUEL CONSUMPTION FIGURES - 2.0L ECOBLUE

Urban	Extra-Urban	Combined	CO_2 Emissions
L/100 km (mpg)	L/100 km (mpg)	L/100 km (mpg)	g/km
11.4–5.7 (25–50)	8.7–5.2 (32–54)	9.7–5.5 (29–51)	143–254

Transit (TTS) Vehicles Built From: 27-01-2020 Vehicles Built Up To: 20-09-2020, CG3796en enGBR, Edition date: 201911, First-Printing

CONNECTED VEHICLE REQUIREMENTS

Connected service and related feature functionality requires a compatible vehicle network.

Some remote features require a subscription. For additional information, see the FordPass app. Some restrictions, third party terms and message or data rates may apply.

CONNECTED VEHICLE LIMITATIONS

Evolving technology or evolving cellular networks could affect functionality and availability, or continued provision of some features. These changes could even stop some features from functioning.

CONNECTING THE VEHICLE TO A MOBILE NETWORK

What Is the Modem



The modem allows access to a range of features built into your vehicle.

Enabling and Disabling the Modem - Vehicles With: 4.2 Inch Instrument Cluster Display Screen

1. Using the information display controls on the steering wheel, select ***Settings***.
2. Select ***FordPass Connect***.
3. Select ***Connectivity***.
4. Switch connectivity features on or off.

Enabling and Disabling the Modem - Vehicles With: 4.2 Inch Information and Entertainment Display Screen

1. Select ***Settings***.
2. Select ***Connectivity features*** .
3. Select ***Data sharing*** .
4. Switch connectivity features on or off.

Enabling and Disabling the Modem - Vehicles With: 8 Inch Information and Entertainment Display Screen

1. Select ***Settings***.
2. Select ***FordPass Connect***.
3. Select ***Connectivity settings***.
4. Switch connectivity features on or off.

Connecting FordPass to the Modem

1. Make sure that the modem is enabled using the vehicle settings menu.
2. Open the FordPass app on your device and log in.
3. Add your vehicle or select your vehicle if already added.
4. Select the option for vehicle details.
5. Select the option to activate your vehicle.
6. Make sure that the name on the screen matches the name shown in your FordPass account.
7. Confirm that FordPass account is connected to the modem .

CONNECTING THE VEHICLE TO A WI-FI NETWORK

1. Select ***Settings***.
2. Select ***Wi-Fi***.

Transit (TTS) Vehicles Built From: 27-01-2020 Vehicles Built Up To: 20-09-2020, CG3796en enGBR, Edition date: 201911, First-Printing

3. Switch ***System Wi-Fi*** on.
4. Select ***View available networks***.
5. Select an available Wi-Fi network.

Note: *Enter the network password to connect to a secure network.*

CONNECTED VEHICLE – TROUBLESHOOTING - VEHICLES WITH: MODEM

Symptom	Possible Cause and Resolution
I cannot confirm the connection of my FordPass account to the modem.	– Modem is not enabled. • Switch connectivity features on. – Weak network signal. • Move your vehicle closer to a place where the network signal is not obstructed.

Transit (TTS) Vehicles Built From: 27-01-2020 Vehicles Built Up To: 20-09-2020, CG3796en enGBR, Edition date: 201911, First-Printing

CONNECTED VEHICLE – TROUBLESHOOTING - VEHICLES WITH: SYNC 3/SYNC 2.5

Symptom	Possible Cause and Resolution
I cannot connect to a Wi-Fi network.	– Password error. • Enter the correct network password. – Weak network signal. • Move your vehicle closer to the Wi-Fi hotspot or to a place where the network signal is not obstructed. – Multiple access points in range with the same SSID. • Use a unique name for your SSID. Do not use the default name unless it contains a unique identifier, for example as part of the MAC address.
The Wi-Fi connection disconnects after successful connection.	– Weak network signal. • Move your vehicle closer to the Wi-Fi hotspot or to a place where the network signal is not obstructed.
I am close to a Wi-Fi hotspot but the network signal strength is weak.	– Obstructed network signal. • If your vehicle has a heated windshield, position your vehicle so that the windshield is not facing the Wi-Fi hotspot. • If your vehicle has metallic tinting on the windows but not on the windshield, position your vehicle so that the windshield is facing the Wi-Fi hotspot or open the windows that are facing the hotspot. • If your vehicle has metallic tinting on the windows and the windshield, open the windows that are facing the hotspot. • If your vehicle is in a garage and you have the garage door closed, open the garage door.
I cannot see a network in the list of available networks that I expect to see.	– Hidden network. • Make the network visible and try again.

Transit (TTS) Vehicles Built From: 27-01-2020 Vehicles Built Up To: 20-09-2020, CG3796en enGBR, Edition date: 201911, First-Printing

Symptom	Possible Cause and Resolution
I cannot see the Wi-Fi hotspot name when I search for Wi-Fi networks on my cell phone or other device.	– System limitation. • Make sure Wi-Fi hotspot visibility is on. • The system does not provide a Wi-Fi hotspot at this time.
Software downloads take too long.	– Weak network signal • Move your vehicle closer to the Wi-Fi hotspot or to a place where the network signal is not obstructed. – Wi-Fi hotspot in high demand or has a slow Internet connection. • Use a more reliable Wi-Fi hotspot.
The system seems to connect to a Wi-Fi network and the signal strength is excellent but the software does not update.	– No software update available. – Wi-Fi network requires a subscription or acceptance of terms and conditions. • Test the connection using another device. If the network requires a subscription or acceptance of terms and conditions, contact the network service provider.

Transit (TTS) Vehicles Built From: 27-01-2020 Vehicles Built Up To: 20-09-2020, CG3796en enGBR, Edition date: 201911, First-Printing

CREATING A WI-FI HOTSPOT

You can create a Wi-Fi hotspot in your vehicle and allow devices to connect to it for access to the Internet.

1. Select ***Settings***.
2. Select ***FordPass Connect***.
3. Select ***Vehicle Hotspot***.

Note: *The vehicle hotspot default setting is on.*

4. Select ***Settings***.
5. Select ***Edit***.
6. Select ***Wi-Fi visibility***.

Note: *The Wi-Fi Visibility default setting is on.*

Finding the Wi-Fi Hotspot Name and Password

1. Select ***Settings***.
2. Select ***FordPass Connect***.
3. Select ***Vehicle Hotspot***.
4. Select ***Settings***.

Note: *The SSID is the hotspot name.*

5. Select ***View password***.

Connecting a Device to the Wi-Fi Hotspot

1. On your device, turn on Wi-Fi and select the hotspot from the list of available Wi-Fi networks.
2. When prompted, enter the password.

Purchasing a Data Plan

1. Connect a device to the hotspot.

Note: *The vehicle network carrier's portal opens on your device.*

2. If the portal does not open on your device, open a website and it redirects to the vehicle network carrier's portal.

Note: *Secure websites do not redirect.*

Note: *If you have an active plan, the system does not redirect to the vehicle network carrier's portal when you connect a device. Visit the vehicle network carrier's website to purchase more data.*

Note: *If data usage information is available in the vehicle hotspot menu, it is approximate.*

Note: *If you carry out a master reset, the system does not remove your vehicle from your vehicle network carrier's account. To remove your vehicle from the account, contact your vehicle network carrier.*

Note: *The vehicle network carrier provides Vehicle Hotspot services, subject to your vehicle network carrier agreement, coverage and availability.*

CHANGING THE WI-FI HOTSPOT NAME OR PASSWORD

1. Select ***Settings***.
2. Select ***FordPass Connect***.
3. Select ***Vehicle Hotspot***.
4. Select ***Settings***.
5. Select ***Edit***.
6. Select ***Change SSID Name***.
7. Enter your required SSID.
8. Select ***Done***.
9. Select ***Change Password*** .
10. Enter your required password.
11. Select ***Done***.

Transit (TTS) Vehicles Built From: 27-01-2020 Vehicles Built Up To: 20-09-2020, CG3796en enGBR, Edition date: 201911, First-Printing

GENERAL INFORMATION

Radio Frequencies and Reception Factors

Note: *Listening to loud audio for long periods of time could damage your hearing.*

Radio reception factors	
Distance and Strength	The further you travel away from an FM station, the weaker the signal and the weaker the reception.
Terrain	Hills, mountains, tall buildings, bridges, tunnels, freeway overpasses, parking garages, dense tree foliage and thunderstorms can interfere with the reception.
Station overload	When you pass near a radio transmission tower, a stronger signal can override a weaker signal and can cause interference in the audio system.

AUDIO UNIT - VEHICLES WITHOUT: SYNC

Switching the Audio Unit On and Off



Adjusting the Volume



E248939

Selecting the Radio



Press the button to select radio mode.

Press the button again to display the available radio sources. Repeatedly press the button to scroll through the available radio sources.

Changing Radio Stations

Manual Tuning



E248947

Transit (TTS) Vehicles Built From: 27-01-2020 Vehicles Built Up To: 20-09-2020, CG3796en enGBR, Edition date: 201911, First-Printing

Note: *You can change radio stations using the seek buttons.*

Note: *You can recall radio stations using the numeric preset buttons.*

Selecting Media



Press the button to select media mode.

Press the button again to display the available media sources. Repeatedly press the button to scroll through the available media sources.

Scrolling Through the Menu Options



E248947

Selecting a Menu Option



E248946

Returning to the Previous Screen



Seek Up and Next Track Button



Select to skip to the next track.

Press and hold the button to fast forward through the track.

Seek Down and Previous Track Button



Select to return to the beginning of a track.

Repeatedly press the button to return to previous tracks.

Press and hold the button to fast rewind.

Pausing or Playing Media



In media mode, press the button to pause playback. Press the button again to resume playback.

Transit (TTS) Vehicles Built From: 27-01-2020 Vehicles Built Up To: 20-09-2020, CG3796en enGBR, Edition date: 201911, First-Printing

In radio mode, press the button to mute the radio. Press the button again to unmute.

Switching the Screen On and Off



System Settings



Sound Settings

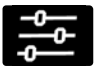

Press the button to adjust the sound settings. You can optimize the sound for different seating positions.

You can also activate and set the sensitivity of the speed compensated volume.

Using a Cell Phone



You can make a call from a recent call list, contact list or dial a number.

AUDIO UNIT - VEHICLES WITH: SYNC 3

Switching the Audio Unit On and Off



Adjusting the Volume



E248939

Changing Radio Stations

Manual Tuning



E270235

Note: *You can change radio stations using the seek buttons.*

Note: *You can recall radio stations using the preset buttons on the touchscreen.*

Seek Up and Next Track Button



Select to skip to the next track.

Transit (TTS) Vehicles Built From: 27-01-2020 Vehicles Built Up To: 20-09-2020, CG3796en enGBR, Edition date: 201911, First-Printing

Press and hold the button to fast forward through the track.

Seek Down and Previous Track Button

Select to return to the beginning of a track.

Repeatedly press the button to return to previous tracks.

Press and hold the button to fast rewind.

Pausing or Playing Media

Select to play a track. Press the button again to pause the track.

In radio mode, press the button to mute the radio. Press the button again to unmute.

Switching the Screen On and Off

Sound Settings

Press the button to adjust the sound settings. You can optimize the sound for different seating positions.

You can also activate and set the sensitivity of the speed compensated volume.

AUDIO UNIT - VEHICLES WITH: SYNC 2.5

Switching the Audio Unit On and Off

Adjusting the Volume



E248939

Changing Radio Stations

Manual Tuning



E270235

Note: *You can change radio stations using the seek buttons.*

Note: *You can recall radio stations using the preset buttons on the touchscreen.*

Seek Up and Next Track Button

Select to skip to the next track.

Transit (TTS) Vehicles Built From: 27-01-2020 Vehicles Built Up To: 20-09-2020, CG3796en enGBR, Edition date: 201911, First-Printing

Press and hold the button to fast forward through the track.

Seek Down and Previous Track Button

Select to return to the beginning of a track.

Repeatedly press the button to return to previous tracks.

Press and hold the button to fast rewind.

Pausing or Playing Media

Select to play a track. Press the button again to pause the track.

In radio mode, press the button to mute the radio. Press the button again to unmute.

Switching the Screen On and Off

Sound Settings

Press the button to adjust the sound settings. You can optimize the sound for different seating positions.

You can also activate and set the sensitivity of the speed compensated volume.

AM/FM RADIO - VEHICLES WITHOUT: SYNC

Selecting a Radio Source

Press the button to display the available radio sources.

Repeatedly press the button to scroll to the desired radio source.

Press the ***OK*** button.

Station Presets

To store a radio station, press and hold one of the numeric preset buttons.

Note: *Six presets can be stored for each radio source.*

Manually Changing Radio Stations



E248947

Rotate the control to change the frequency.

Automatically Changing Radio Stations

Press to seek the next station up the frequency band.

Press and hold to quickly seek up the frequency band.

Press to seek the next station down the frequency band.

Press and hold to quickly seek down the frequency band.

Transit (TTS) Vehicles Built From: 27-01-2020 Vehicles Built Up To: 20-09-2020, CG3796en enGBR, Edition date: 201911, First-Printing

Selecting a Station from the List

Press the ***OK*** button to view available stations.

AM/FM RADIO - VEHICLES WITH: SYNC 2.5

Using the Radio

Select the audio option on the feature bar.

Selecting a Radio Station From a List

1. Select ***Sources***.
2. Select ***AM*** or ***FM***.
3. Select ***Stations***.
4. Select a radio station from the list.

Manually Changing Radio Stations



E270235

Rotate the control to change the frequency.

Note: *In FM mode, rotating the control changes the station.*

Automatically Changing Radio Stations

Press to seek the next station up the frequency band.

Press and hold to quickly seek up the frequency band.

Press to seek the next station down the frequency band.

Press and hold to quickly seek down the frequency band.

Storing a Radio Station

Press and hold one of the preset buttons on the touchscreen.

Note: *The radio briefly mutes to indicate the station has been stored.*

DIGITAL RADIO - VEHICLES WITHOUT: SYNC

Selecting a Radio Source

Press the button to display the available radio sources.

Repeatedly press the button to scroll to the desired radio source.

Press the ***OK*** button.

Station Presets

To store a station, press and hold one of the numeric preset buttons.

Note: *Six presets can be stored for each radio source.*

Transit (TTS) Vehicles Built From: 27-01-2020 Vehicles Built Up To: 20-09-2020, CG3796en enGBR, Edition date: 201911, First-Printing

Manually Changing Stations



E248947

Rotate the control to change the station.

Automatically Changing Radio Stations

Press to seek the next station up the frequency band.

Press and hold to quickly seek up the frequency band.

Press to seek the next station down the frequency band.

Press and hold to quickly seek down the frequency band.

Selecting a Station from the List

Press the ***OK*** button to view available ensembles. Select the desired ensemble and station from the list.

DIGITAL RADIO - VEHICLES WITH: SYNC 2.5

Using the Radio

Select the audio option on the feature bar.

Selecting a Radio Station From a List

1. Select ***Sources***.
2. Select ***DAB***.
3. Select ***Stations***.
4. Select a radio station from the list.

Manually Changing Radio Stations



E270235

Rotate the control to change the frequency.

Automatically Changing Radio Stations

Press to seek the next station up the frequency band.

Press and hold to quickly seek up the frequency band.

Press to seek the next station down the frequency band.

Press and hold to quickly seek down the frequency band.

Storing a Radio Station

Press and hold one of the preset buttons on the touchscreen.

Note: *The radio briefly mutes to indicate the station has been stored.*

Transit (TTS) Vehicles Built From: 27-01-2020 Vehicles Built Up To: 20-09-2020, CG3796en enGBR, Edition date: 201911, First-Printing

AUDIO UNIT CLOCK AND DATE DISPLAYS - VEHICLES WITHOUT: SYNC

Adjusting the Clock



Press the button.

Select the clock and follow the instructions on the screen.

AUDIO UNIT CLOCK AND DATE DISPLAYS - VEHICLES WITH: SYNC 2.5



Select the settings option on the feature bar.

1. Select ***Clock***.
2. Adjust the clock.

CONNECTING A BLUETOOTH® DEVICE - VEHICLES WITHOUT: SYNC

Pairing a Device



Press the button.

Select Bluetooth and follow the instructions on the screen.

Note: *When pairing a new device, you can choose to download contacts, set this as the primary device and enable Emergency Assistance.*

CONNECTING A BLUETOOTH® DEVICE - VEHICLES WITH: SYNC 2.5

Go to the settings menu on your device and switch Bluetooth on.



Select the settings options on the feature bar.

1. Select ***Bluetooth***.
2. Switch Bluetooth on.
3. Select ***Add a Bluetooth device***.

Note: *A prompt alerts you to search for your vehicle on your device.*

4. Select your vehicle on your device.

Note: *A number appears on your device and on the touchscreen.*

5. Confirm that the number on your device matches the number on the touchscreen.

Note: *The touchscreen indicates that you have successfully paired your device.*

STREAMING BLUETOOTH AUDIO - VEHICLES WITHOUT: SYNC

Selecting a Bluetooth Source



Press the button to display the menu.

Repeatedly press the button to scroll to the Bluetooth device.

Press the ***OK*** button.



Press the button to play the track. Press the button again to pause the track.



Press the button to skip to the next track.

Transit (TTS) Vehicles Built From: 27-01-2020 Vehicles Built Up To: 20-09-2020, CG3796en enGBR, Edition date: 201911, First-Printing

Press and hold the button to fast forward through the track.


Press the button once to return to the beginning of the track. Repeatedly press the button to return to previous tracks.

Press and hold the button to fast rewind.

Note: *Not all functions are supported by all phones.*

STREAMING BLUETOOTH AUDIO - VEHICLES WITH: SYNC 2.5

Check the compatibility of your device on the local Ford website.

Pair your device. See **Connecting a Bluetooth® Device** (page 327).


Select the audio option on the feature bar.

Select ***Sources***.


Select the bluetooth option.


Press the button to play the track. Press the button again to pause the track.


Press the button to skip to the next track.

Press and hold the button to fast forward through the track.


Press the button once to return to the beginning of the track. Repeatedly press the button to return to previous tracks.

Press and hold the button to fast rewind.

PLAYING MEDIA FROM A USB DEVICE - VEHICLES WITHOUT: SYNC

Supported Audio File Formats

You can play audio file formats including MP3, WMA, WAV, M4A, M4B, AAC, and FLAC.

Note: *The NTFS file system is not supported.*

Selecting the USB Device


Press the button to display the menu.

Repeatedly press the button to scroll to your USB device.

Press the ***OK*** button.

Playing from the USB Device


Press the button to play a track. Press the button again to pause the track.


Press the button to skip to the next track.

Press and hold the button to fast forward through the track.


Press the button once to return to the beginning of a track. Repeatedly press the button to return to previous tracks.

Press and hold the button to fast rewind.

Sorting by Categories

You can also sort and play music by specific categories, for example artist or album.

Press the ***OK*** button to view the available categories.

Transit (TTS) Vehicles Built From: 27-01-2020 Vehicles Built Up To: 20-09-2020, CG3796en enGBR, Edition date: 201911, First-Printing

PLAYING MEDIA FROM A USB DEVICE - VEHICLES WITH: SYNC 2.5

Supported File Formats

The system supports the following file formats:

- MP3, M4A, M4B, WMA, WAV, AAC, FLAC, APE and AIFF audio file formats.
- ext2, exFAT, FAT, FAT32, NTFS and HFS+ file systems.

Selecting the USB Device

Connect your device to the USB port.



Select the audio option on the feature bar.

Select ***Sources***.



Select the USB option.

Playing from the USB Device



Press the button to play a track. Press the button again to pause the track.



Press the button to skip to the next track.

Press and hold the button to fast forward through the track.



Press the button once to return to the beginning of a track. Repeatedly press the button to return to previous tracks.

Press and hold the button to fast rewind through the track.

Sorting by Categories

You can also sort and play music by specific categories, for example artist or album.

USB PORT

USB ports may be in the following locations:

- On the instrument panel below the climate control. See **At a Glance** (page 18).
- In the center console.

You can use the USB port to charge a device only when the engine is running.

APPS - VEHICLES WITH: SYNC 2.5

Note: *We recommend that you check your data plan before using your apps through the system. Using them could result in additional charges.*

Note: *We recommend that you check the app provider's terms and conditions and privacy policy before using their app.*

Note: *Make sure that you have an active account for apps that you want to use through the system.*

Note: *Some apps will work with no setup. Others require you to configure some personal settings before you can use them.*

Using Apple CarPlay

Switching Apple CarPlay On

1. Connect your device to a USB port.
2. Follow the instructions on the touchscreen.

Note: *Certain features of the system are not available when you are using Apple CarPlay.*

Transit (TTS) Vehicles Built From: 27-01-2020 Vehicles Built Up To: 20-09-2020, CG3796en enGBR, Edition date: 201911, First-Printing

Switching Apple CarPlay Off



Select the settings option on the feature bar.

1. Select ***Apple CarPlay preferences***.
2. Disable Apple CarPlay.

Using Apps on an iOS Device

Note: *For more information about available apps, refer to the local Ford website.*

When you start an app through the system for the first time, you could be asked to grant certain permissions. You can review and change the permissions that you have granted at any time when your vehicle is not moving.



Select the apps option on the feature bar.

1. Switch Apple CarPlay off.
2. Connect your device to a USB port.
3. Start the apps on your device that you want to use through the system.

Note: *If you close the apps on your device, you will not be able to use them through the system.*

4. Select ***Find mobile apps***.

Note: *The system searches and connects to compatible apps that are running on your device.*

5. Select the app that you want to use on the touchscreen.

Using Android Auto

Switching Android Auto On

1. Connect your device to a USB port.
2. Follow the instructions on the touchscreen.

Note: *You might need to enable Android Auto from the settings menu.*

Note: *Certain features of the system are not available when you are using Android Auto.*

Switching Android Auto Off



Select the settings option on the feature bar.

1. Select ***Android Auto preferences***.
2. Disable Android Auto.

Using Apps on an Android Device

Note: *For more information about available apps, refer to the local Ford website.*

When you start an app through the system for the first time, you could be asked to grant certain permissions. You can review and change the permissions that you have granted at any time when your vehicle is not moving.

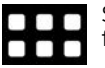

Select the apps option on the feature bar.

1. Switch Android Auto off.
2. Pair your device.
3. Start the apps on your device that you want to use through the system.

Note: *If you close the apps on your device, you will not be able to use them through the system.*

4. Select ***Find mobile apps***.

Note: *The system searches and connects to compatible apps that are running on your device.*

5. Select the app that you want to use on the touchscreen.

Transit (TTS) Vehicles Built From: 27-01-2020 Vehicles Built Up To: 20-09-2020, CG3796en enGBR, Edition date: 201911, First-Printing

Apps Troubleshooting

Symptom	Possible Cause and Resolution
The system cannot find any apps.	– Incompatible device. • You will need an Android device with OS 2.3 or higher or an iOS 3GS device with iOS 5.0 or higher. Pair and connect your Android device to find AppLink compatible apps. Connect your iOS device to a USB port to find AppLink compatible apps.
I have a compatible device and it is correctly connected but the system still cannot find any apps.	– AppLink compatible apps not installed on your device. • Download and install the latest version of the app. – AppLink compatible apps not running on your device. • Start the apps to allow the system to find them and make sure you sign in to any apps if required. – Incorrect app settings. • Check and adjust the app settings on your device and allow the system to access the app if required.
I have a compatible device, it is correctly connected and my apps are running but the system still cannot find any apps.	– Apps failed to fully close. • Restart the apps and try again.
I have an Android device that is correctly connected, I have restarted my apps and they are running but the system still cannot find them.	– An issue on some older versions of the Android operating system could result in apps not being found. • Switch Bluetooth off and on again to force the system to reconnect to your device.

Transit (TTS) Vehicles Built From: 27-01-2020 Vehicles Built Up To: 20-09-2020, CG3796en enGBR, Edition date: 201911, First-Printing

Symptom	Possible Cause and Resolution
I have an iOS device that is correctly connected, I have restarted my apps and they are running but the system still cannot find them.	– Cable connection issue. • Disconnect the cable from your device, wait for a moment and then connect it again to force the system to reconnect to your device.
I have an Android device running a media app which the system has found but I cannot hear the sound or the sound is very quiet.	– Device volume is low. • Turn the volume up on your device.
I have an Android device running a number of compatible apps but the system cannot find all of them.	– Device limitation. Some Android devices have a limited number of Bluetooth ports that apps can use to connect. If you have more apps running on your device than the number of available Bluetooth ports, the system cannot find all of them. • Close some of the apps to allow the system to find those that you want to use.

USING VOICE RECOGNITION

Phone Voice Service

This system allows you to use the voice recognition features of your phone and focus on your driving.



Press the voice control button on the steering wheel.

Note: *This only works when connected via Bluetooth. See* ***Connecting a Bluetooth® Device*** *(page 327).*

Note: *When using voice recognition use the language set on the device.*

Note: *We recommend that you check your data plan before using your phone voice service through the system. Using them could result in additional charges.*

Transit (TTS) Vehicles Built From: 27-01-2020 Vehicles Built Up To: 20-09-2020, CG3796en enGBR, Edition date: 201911, First-Printing

GENERAL INFORMATION

WARNING: Driving while distracted can result in loss of vehicle control, crash and injury. We strongly recommend that you use extreme caution when using any device that may take your focus off the road. Your primary responsibility is the safe operation of your vehicle. We recommend against the use of any hand-held device while driving and encourage the use of voice-operated systems when possible. Make sure you are aware of all applicable local laws that may affect the use of electronic devices while driving.

About SYNC

The system allows you to interact with the entertainment, information and communication systems on your vehicle using voice commands and a touchscreen. The system provides easy interaction with audio, phone, navigation, mobile apps and settings.

Note: *You can switch the system on and use it for up to an hour without switching the ignition on.*

Note: *You can use the system after you switch the ignition off for up to 10 minutes or until you open a door.*

Note: *For your safety, some features are speed-dependent. Their use is limited to when your vehicle speed is less than 5 km/h (3 mph).*

Using the Touchscreen

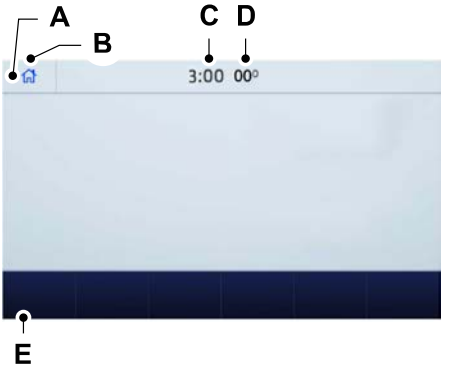

A	Status bar.
B	Home screen.
C	Clock. See **Settings** (page 350).
D	Outside air temperature.
E	Feature bar.

Status Bar


Cell phone microphone muted.


Audio system muted.


Software update installed.


Wi-Fi connected.


Cell phone roaming.


Text message received.

Transit (TTS) Vehicles Built From: 27-01-2020 Vehicles Built Up To: 20-09-2020, CG3796en enGBR, Edition date: 201911, First-Printing


Emergency Assistance off.


Cell phone network signal strength.


Vehicle data sharing on.


Vehicle location sharing on.


Vehicle data and vehicle location sharing on.


Traffic data source: Live traffic.


Traffic data source: Traffic broadcast.


Wireless charger active.

Feature Bar


Select to use the radio, a USB, a media player or a Bluetooth device. See **Entertainment** (page 341).


Select to adjust climate settings.


Select to make calls and access the phonebook on your cell phone. See **Phone** (page 343).


Select to use the navigation system. See **Navigation** (page 345).


Select to search for and use compatible apps on your iOS or Android device. See **Apps** (page 349).


Select to adjust system settings. See **Settings** (page 350).

Cleaning the Touchscreen

See **Cleaning the Interior** (page 270).

Updating the System

Updating the System Using a USB Drive

Downloading an Update

1. Go to the SYNC update page on the local Ford website.
2. Download the update.

Note: *The website notifies you if an update is available.*

3. Insert a USB drive into your computer.

Note: *The USB drive needs to be empty and meet the minimum requirements detailed on the website.*

4. Follow the instructions provided to download the update to the USB drive.

Installing an Update

Note: *You can use the system when installation is in progress.*

1. Disconnect all other USB devices from the USB ports.
2. Connect the USB drive with the update to a USB port.

Note: *Installation starts automatically within 10 minutes.*

Updating the System Using a Wi-Fi Network Connection

Switching Automatic System Updates On

1. Select ***Settings***.
2. Select ***Automatic updates***.
3. Switch ***Automatic system updates*** on.

Transit (TTS) Vehicles Built From: 27-01-2020 Vehicles Built Up To: 20-09-2020, CG3796en enGBR, Edition date: 201911, First-Printing

The system is now set to check for and receive system updates when it is connected to a Wi-Fi network.

Note: *You can use the system when download is in progress.*

Note: *If the system is disconnected from the Wi-Fi network when download is in progress, the download continues the next time the system is connected to a Wi-Fi network.*

Connecting to a Wi-Fi Network

See **Connecting the Vehicle to a Wi-Fi Network** (page 315).

Additional Information and Assistance

For additional information and assistance, we recommend that you contact an authorized dealer or refer to the local Ford website.

USING VOICE RECOGNITION

The system allows you to interact with the entertainment, information and communication systems on your vehicle using voice commands. This allows you to keep your hands on the steering wheel and focus on what is in front of you.



Press the voice control button on the steering wheel and wait for the voice prompt.

Note: *Press the voice control button again to interrupt a voice prompt and begin speaking.*

Note: *Turn the volume control when a voice prompt plays to adjust the volume.*

Note: *Press and hold the voice control button on the steering wheel to use Siri on your iOS device.*

The following voice commands are designed to help you from any screen:

- ***List of commands***
- ***Help***

The following tables list some of the more frequently used voice commands. For a complete list of voice commands, refer to the local Ford website.

General

Voice Command	Description
___ list of commands	Get a list of voice commands for a specific feature.[1]
Cancel	Cancel an active voice session.
___ help	Get a list of voice commands for a specific feature.[1]
Back	Return to the previous screen.
Main menu	Go to the main menu.

Transit (TTS) Vehicles Built From: 27-01-2020 Vehicles Built Up To: 20-09-2020, CG3796en enGBR, Edition date: 201911, First-Printing

Voice Command	Description
Next page	Go to the next page.
Previous page	Go to the previous page.

[1] Add the name of the feature to the command.

Entertainment

Audio Source

Voice Command	Description
Radio	Use the radio.
CD Player	Use the CD player.
Bluetooth audio	Use a Bluetooth device.
USB	Use a USB or media player.

Radio

Voice Command	Description
AM	Listen to AM radio.
___ AM	Tune to a specific AM frequency.[1]
DAB	Listen to DAB radio.
FM	Listen to FM radio.
___ FM	Tune to a specific FM frequency.[1]

[1] Add the radio frequency to two decimal places to the command.

Transit (TTS) Vehicles Built From: 27-01-2020 Vehicles Built Up To: 20-09-2020, CG3796en enGBR, Edition date: 201911, First-Printing

USB and Media Player

Voice Command	Description
Play album ___	Play your music by category.[1]
Play artist ___	
Play audiobook ___	
Play genre ___	
Play playlist ___	
Play podcast ___	
Play song ___	
Browse all albums	Browse music on a USB device.
Browse all artists	
Browse all audiobooks	
Browse all genres	
Browse all playlists	
Browse all podcasts	
Browse all tracks	
Browse album ___	Browse your music by category on a USB device.[1]
Browse artist ___	
Browse audiobook ___	
Browse genre ___	
Browse playlist ___	
Browse podcast ___	

[1] Add an album name, artist name, audiobook name, genre name, playlist name, podcast name or track name to the command. Say the name exactly as it appears on your device.

Transit (TTS) Vehicles Built From: 27-01-2020 Vehicles Built Up To: 20-09-2020, CG3796en enGBR, Edition date: 201911, First-Printing

Phone

Voice Command	Description
Pair phone	Pair a cell phone or Bluetooth enabled device.
Redial	Redial the last number that you dialed.
Dial ___	Dial a number.[1]
Call ___	Call a specific contact from your phonebook.[2]
Call ___ ___	Call a specific contact from your phonebook at a specific location.[3]
Listen to message	Listen to a text message.
Listen to message ___	Listen to a specific text message from a list of text messages.
Reply to message	Reply to the last text message.

[1] Add the number you want to dial to the command.

[2] Add a contact name from your phonebook to the command. Say the first and last name of your contact exactly as it appears on your device.

[3] Add a contact name and location from your phonebook to the command. Say the first and last name of your contact exactly as it appears on your device.

Transit (TTS) Vehicles Built From: 27-01-2020 Vehicles Built Up To: 20-09-2020, CG3796en enGBR, Edition date: 201911, First-Printing

Navigation (If Equipped)

Setting a Destination

Voice Command	Description
Find an address	Enter a destination address. When prompted, provide the house number, the street and city.
Find a POI	Search for a point of interest by name or by category.
Find nearest ___	Search for a nearby point of interest by category.[1]
Find a POI category	Search for a point of interest category.[1]
Destination home	Set your saved home address as your destination.
Destination work	Set your saved place of work as your destination.
Previous destinations	Display and select from a list of previous destinations.
Favourite destinations	Display and select from a list of favorite destinations.

[1] Add a point of interest category or the name of a major brand or chain to the command.

Route Guidance

Voice Command	Description
Cancel route	Cancel the current route.
Reroute	Select an alternate route.
Repeat last instruction	Repeat the last guidance prompt.
Show route	Display an overview of the route.
Show map	Display the map on the touchscreen.
Show north up	Display a two-dimensional map with north toward the top of the touchscreen.
Show heading up	Display a two-dimensional map with the direction you are traveling toward the top of the touchscreen.
Show 3D	Display a three-dimensional map with the direction you are traveling toward the front.

Transit (TTS) Vehicles Built From: 27-01-2020 Vehicles Built Up To: 20-09-2020, CG3796en enGBR, Edition date: 201911, First-Printing

Apps

General

Voice Command	Description
Mobile apps	Start an app. The system prompts your for the app name.
List apps	Get a list of apps running on your device.
Find apps	Search and connect to apps running on your device.

Active App

Voice Command	Description
___ help	Get a list of voice commands for a specific app.[1]
Close ___	Close an app.[1]

[1] Add an app name to the command.

Voice Settings

Voice Command	Description
Voice settings	Go to the voice settings menu.
Interaction mode standard	Switch long voice prompts on.
Interaction mode advanced	Switch short voice prompts on.
Call confirmation on	Switch call confirmation on. The system prompts you to confirm before making a call.
Call confirmation off	Switch call confirmation off. The system does not prompt you to confirm before making a call.
Voice command lists on	Switch the display of voice commands on.
Voice command lists off	Switch the display of voice commands off.

Transit (TTS) Vehicles Built From: 27-01-2020 Vehicles Built Up To: 20-09-2020, CG3796en enGBR, Edition date: 201911, First-Printing

Automatic Blower Motor Speed Reduction

If necessary, the system decreases the blower motor speed when you are using voice commands to reduce the amount of background noise in your vehicle. It returns to normal when you are finished.

Switching Automatic Blower Motor Speed Reduction Off

Simultaneously press the ***A/C*** and recirculated air buttons.

ENTERTAINMENT

Select the audio option on the feature bar.

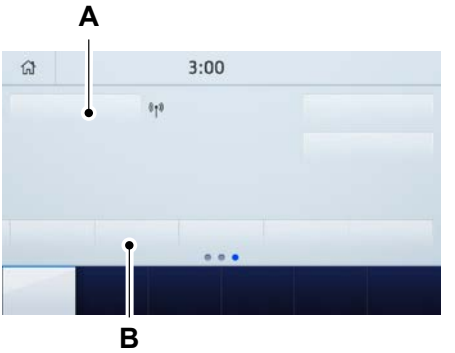

A Audio source. Select to choose a different audio source.

B Presets. Swipe left to view more presets.

You can access these options using the touchscreen or voice commands.

Using the Radio

Setting an AM/FM Radio Station

1. Select ***Sources***.
2. Select ***AM*** or ***FM***.



E270235

3. Rotate the control to change the frequency.

Selecting a FM Radio Station From a List

1. Select ***Sources***.
2. Select ***FM***.
3. Select ***Stations***.
4. Select a radio station from the list.

Selecting a Digital Radio Station From a List

1. Select ***Sources***.
2. Select ***DAB***.
3. Select ***Stations***.
4. Select an ensemble.
5. Select a radio station from the list.

Transit (TTS) Vehicles Built From: 27-01-2020 Vehicles Built Up To: 20-09-2020, CG3796en enGBR, Edition date: 201911, First-Printing

Manually Changing Digital Radio Stations



E270235

Rotate the control to change the station.

Automatically Changing Radio Stations

Press to seek the next station up the frequency band.

Press and hold to quickly seek up the frequency band.

Press to seek the next station down the frequency band.

Press and hold to quickly seek down the frequency band.

Storing a Radio Station

Press and hold one of the preset buttons.

Note: *The radio briefly mutes to indicate the station has been stored.*

Note: *You can add additional preset pages using the settings option on the feature bar.*

Switching Traffic Announcements On

Select ***Traffic (TA)***.

Note: *If you switch traffic announcements on, traffic announcements broadcast by radio stations interrupt the current audio source to help you plan your route.*

Streaming Music From a Bluetooth Device

Check the compatibility of your device on the local Ford website.

Pair your device. See **Phone** (page 343).

Select ***Sources***.

Select Bluetooth.

Searching for Tracks on a Bluetooth Device

Select ***Browse***.

Select a track.

Note: *Select the cover art to view information about the current track.*

Playing Tracks on a Bluetooth Device in a Random Order

Select to play tracks in a random order.

Repeating Tracks on a Bluetooth Device

Select the repeat icon to repeat tracks.

Note: *You can repeat one track or all tracks on an audio format Bluetooth device. You can repeat one track, all tracks or all tracks in one folder on a Bluetooth device.*

Note: *A small number one appears next to the repeat icon to indicate that a track is set to repeat. A small folder icon appears next to it to indicate that a folder is set to repeat.*

Transit (TTS) Vehicles Built From: 27-01-2020 Vehicles Built Up To: 20-09-2020, CG3796en enGBR, Edition date: 201911, First-Printing

Playing Music From a USB or Media Player

Connect your device to a USB port.

Select ***Sources***.



Select USB.

Note: *The system indexes your music before you can play it.*

Searching for Tracks on a USB or Media Player

Select ***Browse***.

Select a track.

Note: *Select the cover art to view information about the current track.*

Note: *You can also browse by album, artist, audiobook, genre, playlist, podcast or track name.*

Playing Tracks on a USB or Media Player in a Random Order



Select to play tracks in a random order.

Repeating Tracks on a USB or Media Player



Select the repeat icon to repeat tracks.

Note: *You can repeat one track or all tracks on an audio format USB or media player. You can repeat one track, all tracks or all tracks in one folder on a USB or media player.*

Note: *A small number one appears next to the repeat icon to indicate that a track is set to repeat. A small folder icon appears next to it to indicate that a folder is set to repeat.*

Supported Devices

The system supports most USB and media players, including iOS and Android devices.

Supported File Formats

The system supports the following file formats:

- MP3, MP4, WMA, WAV, AAC, AIFF, APE, DSD, and FLAC audio file formats.
- MP3, WMA, WAV, M4A, M4B, AAC, and FLAC file extensions.
- FAT, exFAT, and NTFS file systems.

Audio File Metadata

The system organizes files on your USB or media player by metadata tags. Metadata tags contain information about the file. If the metadata tags for the files on your USB or media player contain no information, the system classifies them as unknown. The system can index up to 50000 tracks on a USB device or media player, and up to 10 devices.

PHONE

WARNING: Driving while distracted can result in loss of vehicle control, crash and injury. We strongly recommend that you use extreme caution when using any device that may take your focus off the road. Your primary responsibility is the safe operation of your vehicle. We recommend against the use of any hand-held device while driving and encourage the use of voice-operated systems when possible. Make sure you are aware of all applicable local laws that may affect the use of electronic devices while driving.

Check the compatibility of your device on the local Ford website.

Transit (TTS) Vehicles Built From: 27-01-2020 Vehicles Built Up To: 20-09-2020, CG3796en enGBR, Edition date: 201911, First-Printing

Pairing Your Cell Phone for the First Time

Go to the settings menu on your cell phone and switch Bluetooth on. Make sure your cell phone is discoverable. See your cell phone's user manual.



Select the phone option on the feature bar.

1. Select ***Pair phone***.

Note: *A prompt alerts you to search for your vehicle on your cell phone.*

2. Select your vehicle on your cell phone.

Note: *A number appears on your cell phone and on the touchscreen.*

3. Confirm that the number on your cell phone matches the number on the touchscreen.

Note: *The touchscreen indicates that you have successfully paired your cell phone.*

4. Download the phonebook from your cell phone when you are prompted.

Note: *If you pair more than one cell phone, use the phone settings to specify the primary phone. You can change this setting at any time.*

Using Your Cell Phone

Recent Call list

Display and select an entry from a list of previous calls.

Contacts

Display a smart search form to look up your contacts. Use the List button to alphabetically sort your contacts.

Your phone

Change ring tones, alerts or pair another cell phone.

Change device

Display the list of paired or connected devices that you can select.

Do not disturb

Reject incoming calls and switch ring tones and alerts off.

Phone Keypad

Directly dial a number.

Text messages

Display the cell phone messages.

Siri

Connect to Siri on your iOS device.

Phone Voice Assistant

Connect to the phone voice service on your Android device.

Text Messaging

Setting Text Message Notification

iOS

1. Go to the settings menu on your cell phone.
2. Select Bluetooth.
3. Select the information icon to the right of your vehicle.
4. Switch text message notification on.

Android

1. Go to the settings menu on your cell phone.
2. Select Bluetooth.
3. Select the profiles option.
4. Select the phone profile.
5. Switch text message notification on.

Transit (TTS) Vehicles Built From: 27-01-2020 Vehicles Built Up To: 20-09-2020, CG3796en enGBR, Edition date: 201911, First-Printing

Using Text Messaging

Menu Item	Description
Hear it	Hear the text message.
View	View the text message.
Call	Call the sender.
Reply	Reply to the text message with a standard text message.

Apple CarPlay

1. Connect your device to a USB port.
2. Follow the instructions on the touchscreen.

Note: *Certain features of the system are not available when you are using Apple CarPlay.*

Switching Apple CarPlay Off

1. Select ***Settings***.
2. Select ***Apple CarPlay preferences***.
3. Switch ***Apple CarPlay*** off.

Android Auto

1. Connect your device to a USB port.
2. Follow the instructions on the touchscreen.

Note: *You might need to enable Android Auto from the settings menu.*

Note: *Certain features of the system are not available when you are using Android Auto.*

Switching Android Auto Off

1. Select ***Settings***.
2. Select ***Android Auto***.
3. Switch ***Android Auto*** off.

NAVIGATION

Note: *For more information, refer to the local Ford website.*



Select the navigation option on the feature bar.

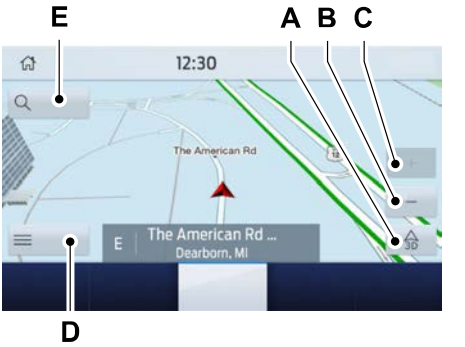

A Map view menu.
B Zoom out.
C Zoom in.
D Route guidance menu.
E Destination entry menu.

Transit (TTS) Vehicles Built From: 27-01-2020 Vehicles Built Up To: 20-09-2020, CG3796en enGBR, Edition date: 201911, First-Printing

Setting a Destination

Setting a Destination Using the Text Entry Screen

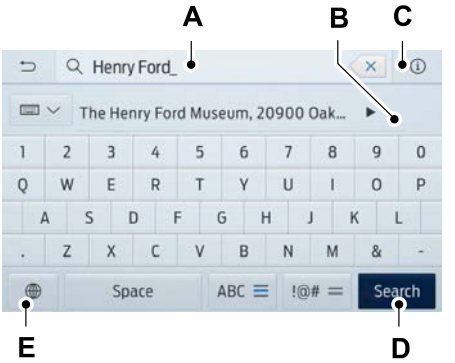

A Text entry field.

B Automatic suggestions based on the text you enter.

C Information icon.

D Search.

E Keyboard settings.

Note: *Select one of the suggestions to copy the detail to the text entry field.*

Note: *You can enter a destination in a number of formats,* ***city street number****,* ***city number street****, zip code or point of interest.*

Note: *You do not have to enter the destination country.*

Note: *To enter mutated vowels or accented characters, for example* ***ä*** *or* ***é****, press and hold the corresponding character on the keyboard.*

Select ***Search***.

Select ***Start*** to begin route guidance.

Setting a Destination Using the Map Screen

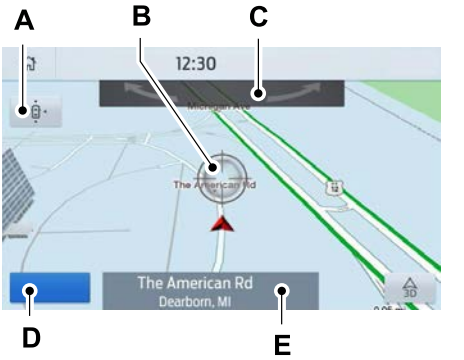

A Re-center the map.

B Selected location.

C 3D map rotation. Swipe left or right.

D Start route guidance.

E Destination name.

Select the location on the map.

Select ***Start*** to begin route guidance.

Changing the Format of the Map

Display the map in one of the following formats:

- A two-dimensional map with the direction you are traveling toward the top of the screen.
- A two-dimensional map with north toward the top of the screen.
- A three-dimensional map with the direction you are traveling toward the front.

Zoom

Display more or less detail on the map.

Transit (TTS) Vehicles Built From: 27-01-2020 Vehicles Built Up To: 20-09-2020, CG3796en enGBR, Edition date: 201911, First-Printing

Note: *You can use pinch gestures to zoom in and out. Place two fingers on the screen and move them apart to zoom in. Place two fingers on the screen and bring them together to zoom out.*

Route Guidance

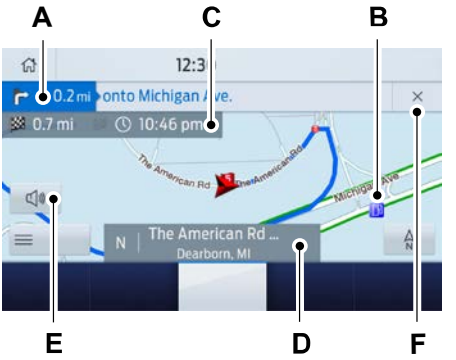

A Turn indicator. Select to hear the last guidance prompt.

B Point of interest.

C Estimated time of arrival, distance to destination or time to destination.

D Current road.

E Mute guidance prompts.

F Cancel route guidance.

Note: *To change guidance prompt volume, turn the volume control when a guidance prompt plays.*

Route Guidance Menu

Menu Item	Description
Screen view	Adjust your map preferences for when route guidance is active.
Full map	View a full screen map when route guidance is active.
Motorway exit info	View exit information for your current route.
Turn list	View the turn list for your current route. Select a road to avoid it.
Traffic list	View traffic nearby or on your current route.[1]
Navigation settings	Adjust navigation settings.
Where am I?	View information about your current location.

Transit (TTS) Vehicles Built From: 27-01-2020 Vehicles Built Up To: 20-09-2020, CG3796en enGBR, Edition date: 201911, First-Printing

Menu Item	Description
Cancel route	Cancel route guidance.
Show route	View the entire current route on the map.
Re-route	View an alternative route compared to your current one.
Edit waypoints	Change the order or remove waypoints.
Optimise order	The system determines the order of waypoints for you.
Start	Go to the next screen and start the new route.
Search	Enter a destination address.
Home	Set your saved home address as your destination
Work	Set your saved place of work as your destination.
Favourites	Display and select from a list of favorite destinations.
Previous destinations	Display and select from a list of previous destinations.
POI	Display the point of interest categories.

[1] Reliant upon traffic message channel or live traffic.

Adjusting the Guidance Prompt Volume

Turn the volume control when a guidance prompt plays to adjust the volume.

Note: *If you have inadvertently adjusted the volume to zero, press the turn indicator button to play the last voice prompt and then adjust the volume to the desired level.*

Muting Guidance Prompts



Select the mute option on the screen to mute guidance prompts.

Note: *The system mutes the next and all future guidance prompts.*

Adding Waypoints

You can add a waypoint to a navigation route as a destination along your route. You can add up to five waypoints.

1. Select the search option on the map.
2. Set a destination.
3. Select the flag icon.
4. Select ***Start***.

Canceling Route Guidance

Canceling Route Guidance From the Route Guidance Menu



Select the route guidance menu option on the active guidance screen.

Select ***Cancel route***.

Canceling Route Guidance From the Main Map



Select the icon in the upper right-hand corner of the main map to cancel route guidance.

Transit (TTS) Vehicles Built From: 27-01-2020 Vehicles Built Up To: 20-09-2020, CG3796en enGBR, Edition date: 201911, First-Printing

Live Traffic (If Equipped)

Live traffic provides near real-time traffic information to help you plan the fastest route to your destination. You must have an active subscription for Live Traffic.

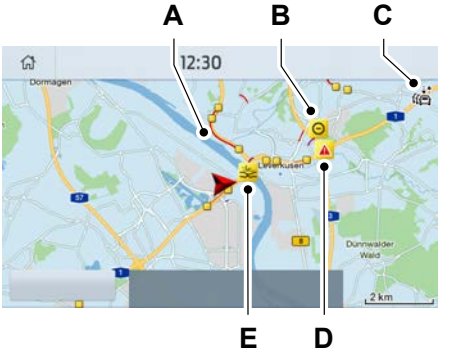

A	Traffic congestion.
B	Road closure.
C	Live traffic active.
D	Urgent warning.
E	Traffic incident.

Switching Live Traffic On

Note: *Make sure that the modem is enabled. See* ***Connected Vehicle*** *(page 315).*

1. Select ***Settings***.
2. Select ***FordPass Connect***.
3. Select ***Connectivity settings***.
4. Switch ***Vehicle connectivity*** on.
5. Switch ***Location*** on.
6. Switch ***Vehicle data & Remote ctrl*** on.
7. Switch ***Live Traffic*** on.

Navigation Map Updates

Please check the local Ford website or contact your dealership for navigation map updates.

HERE is the digital map provider for the navigation application. If you find map data errors, you can report them directly to HERE by visiting *www.here.com*. HERE evaluates all reported map errors and responds with the result of their investigation by e-mail.

APPS

Note: *For more information about available apps, supported devices and troubleshooting, refer to our local website.*

When you start an app through the system for the first time, you could be asked to grant certain permissions. You can review and change the permissions that you have granted at any time when your vehicle is not moving. See **Settings** (page 350).

Note: *We recommend that you check your data plan before using your apps through the system. Using them could result in additional charges.*

Note: *We recommend that you check the app provider's terms and conditions and privacy policy before using their app.*

Note: *Make sure that you have an active account for apps that you want to use through the system.*

Note: *Some apps will work with no setup. Others require you to configure some personal settings before you can use them.*

Using Apps on an iOS Device

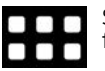

Select the apps option on the feature bar.

Transit (TTS) Vehicles Built From: 27-01-2020 Vehicles Built Up To: 20-09-2020, CG3796en enGBR, Edition date: 201911, First-Printing

1. If your device is connected via USB, switch Apple CarPlay off. See **Phone** (page 343).
2. Connect your device to a USB port or pair and connect using Bluetooth.
3. If prompted to enable CarPlay, select ***Disable***.
4. Start the apps on your device that you want to use through SYNC.

Note: *If you close the apps on your device, you will not be able to use them through the system.*

5. Select the app that you want to use on the touchscreen.

Note: *Connect your device to a USB port if you want to use a navigation app. When using a navigation app, keep your device unlocked and the app open.*

Using Apps on an Android Device



Select the apps option on the feature bar.

1. If your device is connected via USB, switch Android Auto off. See **Phone** (page 343).
2. Switch on ***Enable Mobile apps via USB*** in the Mobile Apps Settings tile.
3. Pair your device. See **Phone** (page 343).
4. Start the apps on your device that you want to use through SYNC.

Note: *If you close the apps on your device, you will not be able to use them through the system.*

5. Select ***Find mobile apps***.

Note: *The system searches and connects to compatible apps that are running on your device.*

6. Select the app that you want to use on the touchscreen.

Note: *Mobile Apps on your device use the USB port to establish a connection with SYNC. Some devices may lose the ability to play music over USB when Mobile Apps are enabled.*

Using Mobile Navigation on an Android Device

1. Connect your device to a USB port.
2. Switch Android Auto off. See **Phone** (page 343).
3. Switch on ***Enable Mobile apps via USB*** in the Mobile Apps Settings tile.
4. Select the apps option on the feature bar.
5. Select the navigation app that you want to use on the touchscreen.

Note: *When using a navigation app, keep your device unlocked and the app open.*

Note: *Mobile Apps on your device use the USB port to establish a connection with SYNC. Some devices may lose the ability to play music over USB when Mobile Apps are enabled.*

SETTINGS



Select the settings option on the feature bar.

Select a tile to access the settings.



Select the option to display extra information.

Ambient Lighting

You can adjust the ambient lighting settings.

Android Auto

You can switch Android Auto on and off.

Transit (TTS) Vehicles Built From: 27-01-2020 Vehicles Built Up To: 20-09-2020, CG3796en enGBR, Edition date: 201911, First-Printing

Apple CarPlay

You can switch Apple CarPlay on and off.

Audio

You can adjust the audio settings.

Automatic Updates

You can switch automatic updates on and off and adjust the settings.

Bluetooth

You can switch Bluetooth on and off and pair your cell phone.

Clock

You can adjust the clock settings.

Display

You can adjust display settings like brightness and auto dim.

Emergency Assistance

You can switch Emergency Assistance on and off.

FordPass

You can adjust the FordPass settings.

General

You can adjust settings like language, measurement units, or reset the system.

Mobile Apps

You can adjust permissions, enable, disable, and update mobile apps.

Navigation (If Equipped)

You can adjust navigation settings like map preferences and route guidance.

Phone

You can connect and disconnect your device, or manage the connected device settings.

Seats (If Equipped)

You can adjust the position and the massage function of the seats.

Sound

You can adjust the sound settings.

Valet Mode (If Equipped)

You can enable and disable the valet mode.

Vehicle (If Equipped)

You can adjust the camera settings.

Voice Control

You can adjust the voice control settings.

Wi-Fi

You can switch Wi-Fi on and off and adjust the settings.

Transit (TTS) Vehicles Built From: 27-01-2020 Vehicles Built Up To: 20-09-2020, CG3796en enGBR, Edition date: 201911, First-Printing

SYNC™ 3 TROUBLESHOOTING

Voice Recognition

Symptom	Possible Cause and Resolution
The system does not understand what I am saying.	– You are using the wrong voice commands. • See **Using Voice Recognition** (page 335). • For a complete list of voice commands, refer to the local Ford website. – You are speaking too soon. • Wait for the voice prompt before you speak.
The system does not understand the name of a track or artist.	– Device limitation. Bluetooth does not support voice commands. • Connect your device to a USB port. • If you have an iOS device, press and hold the voice control button on the steering wheel to use Siri to play specific tracks. – You are using the wrong voice commands. • See **Using Voice Recognition** (page 335). • For a complete list of voice commands, refer to the local Ford website. – You are not saying the name exactly as it appears on your device. • Say the name of the track or artist exactly as it appears on your device. Spell out any abbreviations in the name. The song or artist name may have some special characters that are not being recognized by the system. – The name contains special characters, for example *, - or +. • Rename the files on your device or use the touchscreen to select and play the track.

Transit (TTS) Vehicles Built From: 27-01-2020 Vehicles Built Up To: 20-09-2020, CG3796en enGBR, Edition date: 201911, First-Printing

Symptom	Possible Cause and Resolution
The system does not understand the name of a contact in the phonebook on my device and calls the wrong contact.	– You are not saying the name exactly as it appears on your device. • Say the first and last name of the contact exactly as it appears on your device. Spell out any abbreviations in the name. – The name contains special characters, for example *, - or +. • Rename the contact on your device or use the touchscreen to select and call the contact.
The system does not understand foreign names of contacts in the phonebook on my device.	– You are not saying the name exactly as it appears on your device. • Say the first and last name of the contact exactly as it appears on your device. The system applies phonetic pronunciation rules of the selected language to the names of contacts in the phonebook on your device. Select the name of the contact on the touchscreen and use the Hear it option to get an idea of how the system expects you to pronounce it.
The system voice prompts and the pronunciation of some words does not seem to be very accurate.	– Device limitation. • The system uses text-to-speech technology and uses a synthetically generated voice rather than pre-recorded human voice.

USB and Bluetooth Audio

Symptom	Possible Cause and Resolution
I cannot connect my device.	– Device malfunction. • Disconnect your device. Switch your device off, reset it and try again. – Cable connection issue. • Correctly connect the cable to your device and the vehicle USB port. – Incompatible cable. • Use the cable recommended by the manufacturer of your device.

Transit (TTS) Vehicles Built From: 27-01-2020 Vehicles Built Up To: 20-09-2020, CG3796en enGBR, Edition date: 201911, First-Printing

Symptom	Possible Cause and Resolution
	– Incorrect device settings. • Make sure that your device does not have an auto-install program or active security settings. • Check that your device is not set only to charge. – Device lock screen enabled. • Unlock your device before connecting it.
The system does not recognize my device.	– Device limitation. • Do not leave your device in your vehicle during very hot or very cold weather conditions.
The system does not understand the name of a track or artist.	– Device limitation. Bluetooth does not support voice commands. • Connect your device to a USB port. • If you have an iOS device, press and hold the voice control button on the steering wheel to use Siri to play specific tracks.
I cannot stream audio from my Bluetooth device.	– Incompatible device. • Check the compatibility of your device on the local Ford website. – Device not connected. • Pair your device. See **Phone** (page 343). – Media player not running. • Start the media player on your device.
The system does not recognize the music on my device.	– Missing or incorrect audio file metadata, for example artist, song title, album or genre. • Repair the files on your device. – Corrupt files. • Repair the files on your device. – Copyright protected files. • Use a device that contains files that are not copyright protected. – Unsupported file format. • Repair or convert the files to a supported format. See **Entertainment** (page 341).

Transit (TTS) Vehicles Built From: 27-01-2020 Vehicles Built Up To: 20-09-2020, CG3796en enGBR, Edition date: 201911, First-Printing

Symptom	Possible Cause and Resolution
	– Device indexing required. • Re-index your device. See **Settings** (page 350). – Device lock screen enabled. • Unlock your device before connecting it.
Sometimes I cannot hear a track playing on my device.	– Device malfunction. • Disconnect your device. Switch your device off, reset it and try again.
When I disconnect my iOS device the audio volume is set to maximum.	– Device limitation. • Turn the volume down on your device
The system does not play the tracks on my USB drive in the correct order.	If the system does not play the tracks on your USB device in the correct order, the following information could help: – If you are selecting USB as the audio source when the system is still indexing, SYNC plays tracks sorted alphabetically by file name in the root directory. – If you are selecting USB as the audio source after the system has finished indexing, SYNC plays all tracks sorted alphabetically by the title in the ID3 tag regardless of where they are located. SYNC uses the file name if the title in the ID3 Tag does not exist. – If you are selecting the option to play all tracks from the browsing menu, SYNC plays all tracks sorted alphabetically by the title in the ID3 tag regardless of where they are located. SYNC uses the file name if the title in the ID3 Tag does not exist. – If you are selecting a track when using the explore device option, SYNC plays tracks sorted alphabetically by file name in the folder you have selected. SYNC then plays all tracks in any subfolders in the folder you have selected.

Transit (TTS) Vehicles Built From: 27-01-2020 Vehicles Built Up To: 20-09-2020, CG3796en enGBR, Edition date: 201911, First-Printing

Phone

Symptom	Possible Cause and Resolution
During a call, I can hear excessive background noise.	– Incorrect cell phone settings. • Check and adjust the audio settings on your cell phone. Refer to your cell phone's user manual.
During a call, I can hear the other person but they cannot hear me.	– Cell phone malfunction. • Switch your cell phone off, reset it and try again. – Cell phone microphone muted. • Unmute your cell phone microphone.
During a call, I cannot hear the other person and they cannot hear me.	– System restart required. • Restart the system. Switch the ignition off and open the door. Close the door and lock the vehicle. Wait until the touchscreen is off and any illuminated USB ports are not illuminated. Unlock the vehicle, switch the ignition on and try again.
I cannot download phonebook.	– Incompatible cell phone. • Check the compatibility of your cell phone on the local Ford website. – Incorrect cell phone settings. • Allow the system to retrieve contacts from your cell phone. Refer to your cell phone's user manual. – Incorrect system settings. • Switch automatic phonebook download on. See **Settings** (page 350). – Cell phone malfunction. • Switch your cell phone off, reset it and try again.
A message displays suggesting that my phonebook has downloaded but it is empty or it has missing contacts.	– Incorrect cell phone settings. • Allow the system to retrieve contacts from your cell phone. Refer to your cell phone's user manual. • Check the location of the missing contacts on your cell phone. If they are stored on the SIM card, move them to the cell phone memory. – Incorrect system settings. • Switch automatic phonebook download on. See **Settings** (page 350).

Transit (TTS) Vehicles Built From: 27-01-2020 Vehicles Built Up To: 20-09-2020, CG3796en enGBR, Edition date: 201911, First-Printing

Symptom	Possible Cause and Resolution
I cannot connect my cell phone.	– Incompatible cell phone. • Check the compatibility of your cell phone on the local Ford website. – Cell phone malfunction. • Switch your cell phone off, reset it and try again. • Install the latest cell phone firmware. • Delete your device from system and delete SYNC from your device and try again. • Switch automatic phonebook download off. See **Settings** (page 350).
Text messaging does not work.	– Incompatible cell phone. • Check the compatibility of your cell phone on the local Ford website. – Cell phone malfunction. • Switch your cell phone off, reset it and try again.
I cannot hear text messages.	– Incompatible cell phone. • Check the compatibility of your cell phone on the local Ford website.

Navigation (If Equipped)

Symptom	Possible Cause and Resolution
I cannot enter a street name when I am abroad.	– Incorrect entry method. • Enter the street name with the country.
The system does not recognize coordinates.	– You are using the wrong coordinates format. • Use the format ##. #####, ##. ##### (for N/S , E/W). Add a minus before coordinates if the direction is West and keep a positive value if the direction is East, for example 12.5412 means East and -12.5412 means West.

Transit (TTS) Vehicles Built From: 27-01-2020 Vehicles Built Up To: 20-09-2020, CG3796en enGBR, Edition date: 201911, First-Printing

Apps

Symptom	Possible Cause and Resolution
The system cannot find any apps.	– Incompatible device. • You need an Android device with OS 4.3 or higher or an iOS device with iOS 8.0 or higher. Pair and connect your Android device to find AppLink compatible apps. Connect your Android or iOS device to a USB port or pair and connect using Bluetooth.
I have a compatible device and it is correctly connected but the system still cannot find any apps.	– AppLink compatible apps not installed on your device. • Download and install the latest version of the app. – AppLink compatible apps not running on your device. • Start the apps to allow the system to find them and make sure you sign in to any apps if required. – Incorrect app settings. • Check and adjust the app settings on your device and allow SYNC to access the app if required.
I have a compatible device, it is correctly connected and my apps are running but the system still cannot find any apps.	– Apps failed to fully close. • Restart the apps and try again. • If you have an Android device with apps that have an exit or quit option, use this and then restart the apps. Alternatively, use the force stop option in the settings menu on your device. • If you have an iOS device with iOS 7.0 or higher, tap the home button on your device twice and then swipe the app upward to close it.
I have an Android device that is correctly connected, I have restarted my apps and they are running but the system still cannot find them.	– An issue on some older versions of the Android operating system could result in apps not being found. • Switch Bluetooth off and on again to force the system to reconnect to your device.

Transit (TTS) Vehicles Built From: 27-01-2020 Vehicles Built Up To: 20-09-2020, CG3796en enGBR, Edition date: 201911, First-Printing

Symptom	Possible Cause and Resolution
I have an iOS device that is correctly connected, I have restarted my apps and they are running but the system still cannot find them.	– Cable connection issue. • Disconnect the cable from your device, wait for a moment and then connect it again to force the system to reconnect to your device.
I have an Android device running a media app which the system has found but I cannot hear the sound or the sound is very quiet.	– Device volume is low. • Turn the volume up on your device.
I have an Android device running a number of compatible apps but the system cannot find all of them.	– Device limitation. Some Android devices have a limited number of Bluetooth ports that apps can use to connect. If you have more apps running on your device than the number of available Bluetooth ports, the system cannot find all of them. • Close some of the apps to allow the system to find those that you want to use.

Transit (TTS) Vehicles Built From: 27-01-2020 Vehicles Built Up To: 20-09-2020, CG3796en enGBR, Edition date: 201911, First-Printing

Wi-Fi Connectivity

Symptom	Possible Cause and Resolution
I cannot connect to a Wi-Fi network.	– Password error. • Enter the correct network password. – Weak network signal. • Move your vehicle closer to the Wi-Fi hotspot or to a place where the network signal is not obstructed. – Multiple access points in range with the same SSID. • Use a unique name for your SSID. Do not use the default name unless it contains a unique identifier, for example as part of the MAC address.
The Wi-Fi connection disconnects after successful connection.	– Weak network signal. • Move your vehicle closer to the Wi-Fi hotspot or to a place where the network signal is not obstructed.
I am close to a Wi-Fi hotspot but the network signal strength is weak.	– Obstructed network signal. • If your vehicle has a heated windshield, position your vehicle so that the windshield is not facing the Wi-Fi hotspot. • If your vehicle has metallic tinting on the windows but not on the windshield, position your vehicle so that the windshield is facing the Wi-Fi hotspot or open the windows that are facing the hotspot. • If your vehicle has metallic tinting on the windows and the windshield, open the windows that are facing the hotspot. • If your vehicle is in a garage and you have the garage door closed, open the garage door.

Transit (TTS) Vehicles Built From: 27-01-2020 Vehicles Built Up To: 20-09-2020, CG3796en enGBR, Edition date: 201911, First-Printing

Symptom	Possible Cause and Resolution
I cannot see a network in the list of available networks that I expect to see.	– Hidden network. • Make the network visible and try again.
Software downloads take too long.	– Weak network signal • Move your vehicle closer to the Wi-Fi hotspot or to a place where the network signal is not obstructed. – Wi-Fi hotspot in high demand or has a slow Internet connection. • Use a more reliable Wi-Fi hotspot.
The system seems to connect to a Wi-Fi network and the signal strength is excellent but the software does not update.	– No software update available. – Wi-Fi network requires a subscription or acceptance of terms and conditions. • Test the connection using another device. If the network requires a subscription or acceptance of terms and conditions, contact the network service provider.

Resetting the System

1. Simultaneously press and hold the seek up and the audio unit power buttons until the screen goes black.
2. Wait three minutes to allow the system to complete the reset.
3. Press the audio unit power button to switch the system on.

Note: *You can reset the system to restore functionality that has stopped working. The system reset is designed to restore functionality and not delete any data that you have stored.*

Additional Information and Assistance

For additional information and assistance, we recommend that you contact an authorized dealer or refer to the local Ford website.

Transit (TTS) Vehicles Built From: 27-01-2020 Vehicles Built Up To: 20-09-2020, CG3796en enGBR, Edition date: 201911, First-Printing

ELECTROMAGNETIC COMPATIBILITY

WARNING: Do not place objects or mount equipment on or near the airbag cover, on the side of the front or rear seatbacks, or in areas that may come into contact with a deploying airbag. Failure to follow these instructions may increase the risk of personal injury in the event of a crash.

WARNING: Do not fasten antenna cables to vehicle wiring, fuel pipes and brake pipes.

WARNING: Keep antenna and power cables at least 10 cm (4 in) from any electronic modules and airbags.

Note: *We test and certify your vehicle to meet electromagnetic compatibility legislation. It is your responsibility to make sure that any equipment an authorized dealer installs on your vehicle complies with applicable local legislation and other requirements. Installation of some aftermarket electronic devices could degrade the performance of vehicle functions, which use radio frequency signals such as broadcast radio receiver, tire pressure monitoring system, push button start, Bluetooth connectivity or satellite navigation.*

Note: *Any radio frequency transmitter equipment in your vehicle (such as cellular telephones and amateur radio transmitters) must keep to the parameters in the following illustrations and table. We do not provide any other special provisions or conditions for installations or use.*

Car

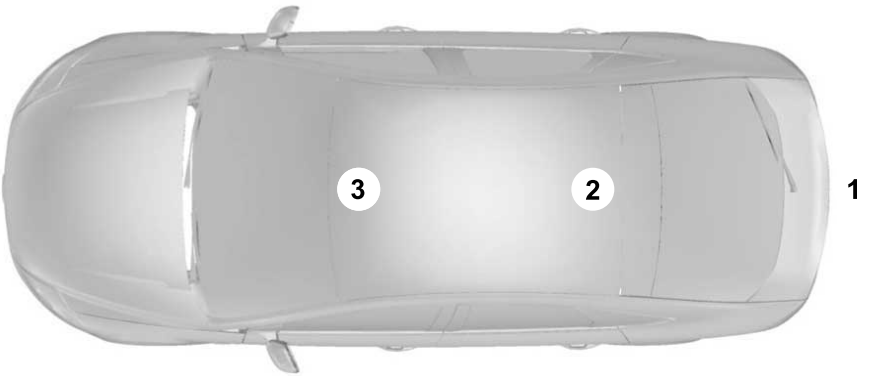

E239120

Transit (TTS) Vehicles Built From: 27-01-2020 Vehicles Built Up To: 20-09-2020, CG3796en enGBR, Edition date: 201911, First-Printing

Van



E239122

Truck

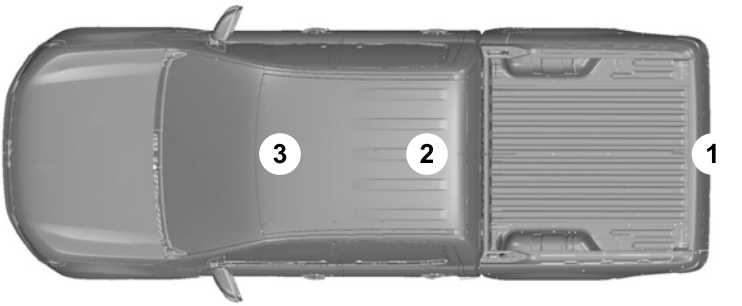

E239121

Transit (TTS) Vehicles Built From: 27-01-2020 Vehicles Built Up To: 20-09-2020, CG3796en enGBR, Edition date: 201911, First-Printing

Frequency Band MHz	Maximum output power Watt (Peak RMS)	Antenna Positions
1-30	50	1
50-54	50	2, 3
68-88	50	2, 3
142-176	50	2, 3
380-512	50	2, 3
806-870	10	2, 3

Transit (TTS) Vehicles Built From: 27-01-2020 Vehicles Built Up To: 20-09-2020, CG3796en enGBR, Edition date: 201911, First-Printing

END USER LICENSE AGREEMENT

VEHICLE SOFTWARE END USER LICENSE AGREEMENT (EULA)

- You (“You” or “Your” as applicable) have acquired a vehicle having several devices, including SYNC ® and various control modules, ("DEVICES") that include software licensed or owned by Ford Motor Company and its affiliates ("FORD MOTOR COMPANY"). Those software products of FORD MOTOR COMPANY origin, as well as associated media, printed materials, and "online" or electronic documentation ("SOFTWARE") are protected by international intellectual property laws and treaties. The SOFTWARE is licensed, not sold. All rights reserved.
- The SOFTWARE may interface with and/or communicate with, or may be later upgraded to interface with and/or communicate with additional software and/or systems provided by FORD MOTOR COMPANY.

IF YOU DO NOT AGREE TO THIS END USER LICENSE AGREEMENT ("EULA") DO NOT USE THE DEVICES OR COPY THE SOFTWARE. ANY USE OF THE SOFTWARE, INCLUDING BUT NOT LIMITED TO USE ON THE DEVICES, WILL CONSTITUTE YOUR AGREEMENT TO THIS EULA (OR RATIFICATION OF ANY PREVIOUS CONSENT).

GRANT OF SOFTWARE LICENSE: This EULA grants you the following license:

- You may use the SOFTWARE as installed on the DEVICES and as otherwise interfacing with systems and/or services provide by or through FORD MOTOR COMPANY or its third party software and service providers.

Description of Other Rights and Limitations

- **Speech Recognition:** If the SOFTWARE includes speech recognition component(s), you should understand that speech recognition is an inherently statistical process and that recognition errors are inherent in the process. Neither FORD MOTOR COMPANY nor its suppliers shall be liable for any damages arising out of errors in the speech recognition process. It is your responsibility to monitor any speech recognition functions included in the system.
- **Limitations on Reverse Engineering, Decompilation and Disassembly:** You may not reverse engineer, decompile, translate, disassemble or attempt to discover any source code or underlying ideas or algorithms of the SOFTWARE nor permit others to reverse engineer, decompile or disassemble the SOFTWARE, except and only to the extent that such activity is expressly permitted by applicable law notwithstanding this limitation or to the extent as may be permitted by the licensing terms governing use of any open source components included with the SOFTWARE.
- **Limitations on Distributing, Copying, Modifying and Creating Derivative Works:** You may not distribute, copy, make modifications to or create derivative works based on the SOFTWARE, except and only to the extent that such activity is expressly permitted by applicable law notwithstanding this limitation or to the extent as may be permitted by the licensing terms governing use of any open source components included with the SOFTWARE.

Transit (TTS) Vehicles Built From: 27-01-2020 Vehicles Built Up To: 20-09-2020, CG3796en enGBR, Edition date: 201911, First-Printing

- **Single EULA:** The end user documentation for the DEVICES and related systems and services may contain multiple EULAs, such as multiple translations and/or multiple media versions (e.g., in the user documentation and in the software). Even if you receive multiple EULAs, you are licensed to use only one (1) copy of the SOFTWARE.
- **SOFTWARE Transfer:** You may permanently transfer your rights under this EULA only as part of a sale or transfer of the DEVICES, provided you retain no copies, you transfer all of the SOFTWARE (including all component parts, the media and printed materials, any upgrades, and, if applicable, the Certificate(s) of Authenticity), and the recipient agrees to the terms of this EULA. If the SOFTWARE is an upgrade, any transfer must include all prior versions of the SOFTWARE.
- **Termination:** Without prejudice to any other rights, FORD MOTOR COMPANY may terminate this EULA if you fail to comply with the terms and conditions of this EULA.
- **Internet-Based Services Components:** The SOFTWARE may contain components that enable and facilitate the use of certain Internet-based services. You acknowledge and agree that FORD MOTOR COMPANY, third party software and service suppliers, its affiliates and/or its designated agent may automatically check the version of the SOFTWARE and/or its components that you are utilizing and may provide upgrades or supplements to the SOFTWARE that may be automatically downloaded to your DEVICES.
- **Additional Software/Services:** The SOFTWARE may permit FORD MOTOR COMPANY, third party software and service suppliers, its affiliates and/or its designated agent to provide or make available to you SOFTWARE updates, supplements, add-on components, or Internet-based services components of the SOFTWARE after the date you obtain your initial copy of the SOFTWARE ("Supplemental Components".) SOFTWARE updates may cause you to incur additional charges from your wireless service provider. If FORD MOTOR COMPANY or third party software and services suppliers provide or make available to you Supplemental Components and no other EULA terms are provided along with the Supplemental Components, then the terms of this EULA shall apply. FORD MOTOR COMPANY, its affiliates and/or its designated agent reserve the right to discontinue without liability any Internet-based services provided to you or made available to you through the use of the SOFTWARE.

Transit (TTS) Vehicles Built From: 27-01-2020 Vehicles Built Up To: 20-09-2020, CG3796en enGBR, Edition date: 201911, First-Printing

- **Links to Third Party Sites:** The SOFTWARE may provide you with the ability to link to third party sites. The third party sites are not under the control of FORD MOTOR COMPANY, its affiliates and/or its designated agent. Neither FORD MOTOR COMPANY nor its affiliates nor its designated agent are responsible for (I) the contents of any third party sites, any links contained in third party sites, or any changes or updates to third party sites, or (ii) webcasting or any other form of transmission received from any third party sites. If the SOFTWARE provides links to third party sites, those links are provided to you only as a convenience, and the inclusion of any link does not imply an endorsement of the third party site by FORD MOTOR COMPANY, its affiliates and/or its designated agent.
- **Obligation to Drive Responsibly:** You recognize your obligation to drive responsibly and keep attention on the road. You will read and abide with the DEVICES operating instructions particularly as they pertain to safety and you agree to assume any risk associated with the use of the DEVICES.

UPGRADES AND RECOVERY MEDIA: If the SOFTWARE is provided by FORD MOTOR COMPANY separate from the DEVICES on media such as a ROM chip, CD ROM disk(s) or via web download or other means, and is labeled "For Upgrade Purposes Only" or "For Recovery Purposes Only" you may install one (1) copy of such SOFTWARE onto the DEVICES as a replacement copy for the existing SOFTWARE, and use it in accordance with this EULA, including any additional EULA terms accompanying the upgrade SOFTWARE.

INTELLECTUAL PROPERTY RIGHTS: All title and intellectual property rights in and to the SOFTWARE (including but not limited to any images, photographs, animations, video, audio, music, text and "applets" incorporated into the SOFTWARE), the accompanying printed materials, and any copies of the SOFTWARE, are owned by FORD MOTOR COMPANY, or its affiliates or suppliers. The SOFTWARE is licensed, not sold. You may not copy the printed materials accompanying the SOFTWARE. All title and intellectual property rights in and to the content which may be accessed through use of the SOFTWARE is the property of the respective content owner and may be protected by applicable copyright or other intellectual property laws and treaties. This EULA grants you no rights to use such content outside its intended use. All rights not specifically granted under this EULA are reserved by FORD MOTOR COMPANY, its affiliates, and third party software and service providers and suppliers. Use of any on-line services which may be accessed through the SOFTWARE may be governed by the respective terms of use relating to such services. If this SOFTWARE contains documentation that is provided only in electronic form, you may print one copy of such electronic documentation.

EXPORT RESTRICTIONS: You acknowledge that the SOFTWARE is subject to U.S. and European Union export jurisdiction. You agree to comply with all applicable international and national laws that apply to the SOFTWARE, including the U.S. Export Administration Regulations, as well as end-user, end-use and destination restrictions issued by U.S. and other governments.

Transit (TTS) Vehicles Built From: 27-01-2020 Vehicles Built Up To: 20-09-2020, CG3796en enGBR, Edition date: 201911, First-Printing

TRADEMARKS: This EULA does not grant you any rights in connection with any trademarks or service marks of FORD MOTOR COMPANY, its affiliates, and third party software and service providers.

PRODUCT SUPPORT: Please refer to FORD MOTOR COMPANY instructions provided in the documentation for the DEVICES product support, such as the vehicle owner guide.

Should you have any questions concerning this EULA, or if you desire to contact FORD MOTOR COMPANY for any other reason, please refer to the address provided in the documentation for the DEVICES.

No Liability for Certain Damages: EXCEPT AS PROHIBITED BY LAW, FORD MOTOR COMPANY, ANY THIRD PARTY SOFTWARE OR SERVICES SUPPLIERS, AND THEIR AFFILIATES SHALL HAVE NO LIABILITY FOR ANY INDIRECT, SPECIAL, CONSEQUENTIAL OR INCIDENTAL DAMAGES ARISING FROM OR IN CONNECTION WITH THE USE OR PERFORMANCE OF THE SOFTWARE. THIS LIMITATION SHALL APPLY EVEN IF ANY REMEDY FAILS OF ITS ESSENTIAL PURPOSE. THERE ARE NO WARRANTIES OTHER THAN THOSE THAT MAY BE EXPRESSLY PROVIDED FOR YOUR NEW VEHICLE.

SYNC® Automotive Important Safety Information Read and follow instructions:

- Before using your SYNC® system, read and follow all instructions and safety information provided in this end user manual ("Owner Guide".) Not following precautions found in the Owner Guide can lead to an accident or other serious injuries.

General Operation

- **Voice Command Control**: Certain functions within the SYNC® system may be accomplished using voice commands. Using voice commands while driving helps you to operate the system without removing your hands from the wheel or eyes from the road.
- **Prolonged Views of Screen:** Do not access any function requiring a prolonged view of the screen while you are driving. Pull over in a safe and legal manner before attempting to access a function of the system requiring prolonged attention.
- **Volume Setting:** Do not raise the volume excessively. Keep the volume at a level where you can still hear outside traffic and emergency signals while driving. Driving while unable to hear these sounds could cause an accident.
- **Navigation Features:** Any navigation features included in the system are intended to provide turn by turn instructions to get you to a desired destination. Please make certain all persons using this system carefully read and follow instructions and safety information fully.
- **Distraction Hazard:** Any navigation features may require manual (non-verbal) setup. Attempting to perform such set-up or insert data while driving can distract your attention and could cause an accident or other serious injury. Stop the vehicle in a safe and legal manner before attempting these operations.
- **Let Your Judgment Prevail:** Any navigation features are provided only as an aid. Make your driving decisions based on your observations of local conditions and existing traffic regulations. Any such feature is not a

Transit (TTS) Vehicles Built From: 27-01-2020 Vehicles Built Up To: 20-09-2020, CG3796en enGBR, Edition date: 201911, First-Printing

substitute for your personal judgment. Any route suggestions made by this system should never replace any local traffic regulations or your personal judgment or knowledge of safe driving practices.

- **Route Safety:** Do not follow the route suggestions if doing so would result in an unsafe or illegal maneuver, if you would be placed in an unsafe situation, or if you would be directed into an area that you consider unsafe. The driver is ultimately responsible for the safe operation of the vehicle and therefore, must evaluate whether it is safe to follow the suggested directions.
- **Potential Map Inaccuracy:** Maps used by this system may be inaccurate because of changes in roads, traffic controls or driving conditions. Always use good judgment and common sense when following the suggested routes.
- **Emergency Services:** Do not rely on any navigation features included in the system to route you to emergency services. Ask local authorities or an emergency services operator for these locations. Not all emergency services such as police, fire stations, hospitals and clinics are likely to be contained in the map database for such navigation features.

Your Responsibilities and Assumptions of Risk

- You agree to each of the following:(a) Any use of the SOFTWARE while driving an automobile or other vehicle in violation of applicable law or otherwise driving in an unsafe manner presents a significant risk of distracted driving and should not be attempted under any circumstances;(b) Use of the SOFTWARE at excessive volume poses a significant risk of hearing damage and should not be attempted under any circumstances;(c) The SOFTWARE may not be compatible with new or different versions of an operating system, third party software, or third party services, and the SOFTWARE may potentially cause a critical failure of an operating system, third party software, or third party service.(d) Any third party service accessed by or third party software used with the SOFTWARE (I) may charge an additional fee for access, (ii) may not work correctly, on an uninterrupted basis, or error free, (iii) may change streaming formats or discontinue operation, (iv) may contain adult, profane or offensive content; and (v) may contain inaccurate, false or misleading traffic, weather, financial or safety information or other content; and (e) Use of the SOFTWARE may cause you to incur additional charges from your wireless service provider (WSP) and any data or minute calculators that may be included in the software program are for reference only, are not warranted in any way and should not be relied upon in anyway.
- When using the SOFTWARE, you agree to be responsible for and assume the entire risk to the items set forth in Section (a) – (e) above.

Transit (TTS) Vehicles Built From: 27-01-2020 Vehicles Built Up To: 20-09-2020, CG3796en enGBR, Edition date: 201911, First-Printing

Disclaimer of Warranty

YOU EXPRESSLY ACKNOWLEDGE AND AGREE THAT USE OF THE DEVICES AND SOFTWARE IS AT YOUR SOLE RISK AND THAT THE ENTIRE RISK AS TO SATISFACTORY QUALITY, PERFORMANCE, COMPATIBILITY, ACCURACY AND EFFORT IS WITH YOU. TO THE MAXIMUM EXTENT PERMITTED BY APPLICABLE LAW, THE SOFTWARE AND ANY THIRD PARTY SOFTWARE OR THIRD-PARTY SERVICES ARE PROVIDED "AS IS" AND “AS AVAILABLE”, WITH ALL FAULTS AND WITHOUT WARRANTY OF ANY KIND, AND FORD MOTOR COMPANY HEREBY DISCLAIMS ALL WARRANTIES AND CONDITIONS WITH RESPECT TO THE SOFTWARE, THIRD PARTY SOFTWARE, AND THIRD-PARTY SERVICES, EITHER EXPRESS, IMPLIED OR STATUTORY, INCLUDING, BUT NOT LIMITED TO, THE IMPLIED WARRANTIES AND/OR CONDITIONS OF MERCHANTABILITY, OF SATISFACTORY QUALITY, OF FITNESS FOR AN ARTICULAR PURPOSE, OF ACCURACY, OF QUIET ENJOYMENT, AND NON-INFRINGEMENT OF THIRD-PARTY RIGHTS. FORD MOTOR COMPANY DOES NOT WARRANT (a) AGAINST INTERFERENCE WITH YOUR ENJOYMENT OF THE SOFTWARE, THIRD PARTY SOFTWARE, OR THIRD-PARTY SERVICES, (b) THAT THE SOFTWARE, THIRD PARTY SOFTWARE, OR THIRD-PARTY SERVICES WILL MEET YOUR REQUIREMENTS, (c) THAT THE OPERATION OF THE SOFTWARE, THIRD PARTY SOFTWARE, OR THIRD-PARTY SERVICES WILL BE UNINTERRUPTED OR ERROR-FREE, (d) OR THAT DEFECTS IN THE SOFTWARE, THIRD PARTY SOFTWARE, OR THIRD-PARTY SERVICES WILL BE CORRECTED. NO ORAL OR WRITTEN INFORMATION OR ADVICE GIVEN BY FORD MOTOR COMPANY OR ITS AUTHORIZED REPRESENTATIVE SHALL CREATE A WARRANTY. SHOULD THE SOFTWARE, THIRD PARTY SOFTWARE, OR THIRD-PARTY SERVICES PROVE DEFECTIVE, YOU ASSUME THE ENTIRE COST OF ALL NECESSARY SERVICING, REPAIR OR CORRECTION. SOME JURISDICTIONS DO NOT ALLOW THE DISCLAIMER OF IMPLIED WARRANTIES OR LIMITATIONS ON APPLICABLE STATUTORY RIGHTS OF A CONSUMER, SO THE ABOVE DISCLAIMER MAY NOT FULLY APPLY TO YOU. THE SOLE WARRANTY PROVIDED BY FORD MOTOR COMPANY SHALL BE FOUND IN THE WARRANTY INFORMATION INCLUDING WITH YOUR OWNER GUIDE. TO THE EXTENT THAT THERE IS ANY CONFLICT BETWEEN THE TERMS OF THIS SECTION AND THE WARRANTY BOOKLET, THE WARRANTY BOOKLET SHALL CONTROL.

Applicable Law, Venue, Jurisdiction

- The laws of the State of Michigan govern this EULA and Your use of the SOFTWARE. Your use of the SOFTWARE may also be subject to other local, state, national, or international laws. Any litigation arising out of or related to this EULA shall be brought and maintained exclusively in a court of the State of Michigan located in Wayne County or in the United States District Court for the Eastern District of Michigan. You hereby consent to submit to the personal jurisdiction of a court in the State of Michigan located in Wayne County and the United States District Court for the Eastern District of Michigan for any dispute arising out of or relating to this EULA.

Transit (TTS) Vehicles Built From: 27-01-2020 Vehicles Built Up To: 20-09-2020, CG3796en enGBR, Edition date: 201911, First-Printing

Binding Arbitration and Class Action Waiver

(a) Application. This Section applies to any dispute EXCEPT IT DOES NOT INCLUDE A DISPUTE RELATING TO COPYRIGHT INFRINGEMENT, OR TO THE ENFORCEMENT OR VALIDITY OF YOUR, FORD MOTOR COMPANY, OR ANY OF FORD MOTOR COMPANY'S LICENSORS' INTELLECTUAL PROPERTY RIGHTS. Dispute means any dispute, action, or other controversy between You and FORD MOTOR COMPANY, other than the exceptions listed above, concerning the SOFTWARE (including its price) or this EULA, whether in contract, warranty, tort, statute, regulation, ordinance, or any other legal or equitable basis.

(b) Notice of Dispute. In the event of a Dispute, You or FORD MOTOR COMPANY must give the other a "Notice of Dispute", which is a written statement of the name, address, and contact information of the party giving it, the facts giving rise to the dispute, and the relief requested. You and FORD MOTOR COMPANY will attempt to resolve any dispute through informal negotiation within 60 days from the date the Notice of Dispute is sent. After 60 days, You or FORD MOTOR COMPANY may commence arbitration.

(c) Small claims court. You may also litigate any dispute in small claims court in your county of residence or FORD MOTOR COMPANY'S principal place of business, if the dispute meets all requirements to be heard in the small claims court. You may litigate in small claims court whether or not You negotiated informally first.

(d) Binding arbitration. If You and FORD MOTOR COMPANY, do not resolve any dispute by informal negotiation or in small claims court, any other effort to resolve the dispute will be conducted exclusively by binding arbitration. You are giving up the right to litigate (or participate in as a party or class member) all disputes in court before a judge or jury. Instead, all disputes will be resolved before a neutral arbitrator, whose decision will be final except for a limited right of appeal under the Federal Arbitration Act. Any court with jurisdiction over the parties may enforce the arbitrator's award.

(e) Class action waiver. Any proceedings to resolve or litigate any dispute in any forum will be conducted solely on an individual basis. Neither you nor FORD MOTOR COMPANY, will seek to have any dispute heard as a class action, as a private attorney general action, or in any other proceeding in which any party acts or proposes to act in a representative capacity. No arbitration or proceeding will be combined with another without the prior written consent of all parties to all affected arbitrations or proceedings.

(f) Arbitration procedure. Any arbitration will be conducted by the American Arbitration Association (the "AAA"), under its Commercial Arbitration Rules. If You are an individual and use the SOFTWARE for personal or vehicle use, or if the value of the dispute is $75,000 or less whether or not You are an individual or how You use the SOFTWARE, the AAA Supplementary Procedures for Consumer-Related Disputes will also apply. To commence arbitration, submit a Commercial Arbitration Rules Demand for Arbitration form to the AAA. You may request a telephonic or in-person hearing by following the AAA rules. In a dispute involving $10,000 or less, any hearing will be telephonic unless the arbitrator finds good cause to hold an in-person hearing instead. For more information, see adr.org or call 1-800-778-7879. You agree to commence arbitration only in your county of residence or FORD MOTOR COMPANY'S principal place of business. The arbitrator

Transit (TTS) Vehicles Built From: 27-01-2020 Vehicles Built Up To: 20-09-2020, CG3796en enGBR, Edition date: 201911, First-Printing

may award the same damages to You individually as a court could. The arbitrator may award declaratory or injunctive relief only to You individually, and only to the extent required to satisfy Your individual claim.

(g) Arbitration fees and incentives.

- I. Disputes involving $75,000 or less. FORD MOTOR COMPANY will promptly reimburse your filing fees and pay the AAA's and arbitrator's fees and expenses. If you reject FORD MOTOR COMPANY'S last written settlement offer made before the arbitrator was appointed ("last written offer"), your dispute goes all the way to an arbitrator's decision (called an "award"), and the arbitrator awards you more than the last written offer, FORD MOTOR COMPANY will give you three incentives: (1) pay the greater of the award or $1,000; (2) pay twice your reasonable attorney's fees, if any; and (3) reimburse any expenses (including expert witness fees and costs) that your attorney reasonably accrues for investigating, preparing, and pursuing your claim in arbitration. The arbitrator will determine the amounts.
- ii. Disputes involving more than $75,000. The AAA rules will govern payment of filing fees and the AAA's and arbitrator's fees and expenses.
- iii. Disputes involving any amount. In any arbitration you commence, FORD MOTOR COMPANY will seek its AAA or arbitrator's fees and expenses, or Your filing fees it reimbursed, only if the arbitrator finds the arbitration frivolous or brought for an improper purpose. In any arbitration FORD MOTOR COMPANY commences, it will pay all filing, AAA, and arbitrator's fees and expenses. It will not seek its attorney's fees or expenses from you in any arbitration. Fees and expenses are not counted in determining how much a dispute involves.

(h) Claims or disputes must be filed within one year. To the extent permitted by law, any claim or dispute under this EULA to which this Section applies must be filed within one year in small claims court (Section c) or in arbitration (Section d). The one-year period begins when the claim or dispute first could be filed. If such a claim or dispute is not filed within one year, it is permanently barred.

(I) Severability. If the class action waiver (Section e) is found to be illegal or unenforceable as to all or some parts of a dispute, then that portion of Section e will not apply to those parts. Instead, those parts will be severed and proceed in a court of law, with the remaining parts proceeding in arbitration. If any other provision of that portion Section e is found to be illegal or unenforceable, that provision will be severed with the remainder of Section e remaining in full force and effect.

Telenav Software End User License Agreement

Please read these terms and conditions carefully before you use the TeleNav Software. Your use of the TeleNav Software indicates that you accept these terms and conditions. If you do not accept these terms and conditions, do not break the seal of the package, launch, or otherwise use the TeleNav Software. TeleNav may revise this Agreement and the privacy policy at any time, with or without notice to you. You agree to visit http://www.telenav.com from time to time to review the then current version of this Agreement and of the privacy policy.

Transit (TTS) Vehicles Built From: 27-01-2020 Vehicles Built Up To: 20-09-2020, CG3796en enGBR, Edition date: 201911, First-Printing

1. Safe and Lawful Use

You acknowledge that devoting attention to the TeleNav Software may pose a risk of injury or death to you and others in situations that otherwise require your undivided attention, and you therefore agree to comply with the following when using the TeleNav Software:

(a) observe all traffic laws and otherwise drive safely;

(b) use your own personal judgment while driving. If you feel that a route suggested by the TeleNav Software instructs you to perform an unsafe or illegal maneuver, places you in an unsafe situation, or directs you into an area that you consider to be unsafe, do not follow such instructions;

(c) do not input destinations, or otherwise manipulate the TeleNav Software, unless your vehicle is stationary and parked;

(d) do not use the TeleNav Software for any illegal, unauthorized, unintended, unsafe, hazardous, or unlawful purposes, or in any manner inconsistent with this Agreement;

(e) arrange all GPS and wireless devices and cables necessary for use of the TeleNav Software in a secure manner in your vehicle so that they will not interfere with your driving and will not prevent the operation of any safety device (such as an airbag).

You agree to indemnify and hold TeleNav harmless against all claims resulting from any dangerous or otherwise inappropriate use of the TeleNav Software in any moving vehicle, including as a result of your failure to comply with the directions above.

2. Account Information

You agree: (a) when registering the TeleNav Software, to provide TeleNav with true, accurate, current, and complete information about yourself, and (b) to inform TeleNav promptly of any changes to such information, and to keep it true, accurate, current and complete.

3. Software License

- Subject to your compliance with the terms of this Agreement, TeleNav hereby grants to you a personal, non-exclusive, non-transferable license (except as expressly permitted below in connection with your permanent transfer of the TeleNav Software license), without the right to sublicense, to use the TeleNav Software (in object code form only) in order to access and use the TeleNav Software. This license shall terminate upon any termination or expiration of this Agreement. You agree that you will use the TeleNav Software only for your personal business or leisure purposes, and not to provide commercial navigation services to other parties.

3.1 License Limitations

- **(a)** reverse engineer, decompile, disassemble, translate, modify, alter or otherwise change the TeleNav Software or any part thereof; **(b)** attempt to derive the source code, audio library or structure of the TeleNav Software without the prior express written consent of TeleNav; **(c)** remove from the TeleNav Software, or alter, any of TeleNav's or its suppliers' trademarks, trade names, logos, patent or copyright notices, or other notices or markings; **(d)**

Transit (TTS) Vehicles Built From: 27-01-2020 Vehicles Built Up To: 20-09-2020, CG3796en enGBR, Edition date: 201911, First-Printing

distribute, sublicense or otherwise transfer the TeleNav Software to others, except as part of your permanent transfer of the TeleNav Software; or **(e)** use the TeleNav Software in any manner that

I. infringes the intellectual property or proprietary rights, rights of publicity or privacy or other rights of any party,

ii. violates any law, statute, ordinance or regulation, including but not limited to laws and regulations related to spamming, privacy, consumer and child protection, obscenity or defamation, or

iii. is harmful, threatening, abusive, harassing, tortuous, defamatory, vulgar, obscene, libelous, or otherwise objectionable; and (f) lease, rent out, or otherwise permit unauthorized access by third parties to the TeleNav Software without advanced written permission of TeleNav.

4. Disclaimers

- To the fullest extent permissible pursuant to applicable law, in no event will TeleNav, its licensors and suppliers, or agents or employees of any of the foregoing, be liable for any decision made or action taken by you or anyone else in reliance on the information provided by the TeleNav Software. TeleNav also does not warrant the accuracy of the map or other data used for the TeleNav Software. Such data may not always reflect reality due to, among other things, road closures, construction, weather, new roads and other changing conditions. You are responsible for the entire risk arising out of your use of the TeleNav Software. For example but without limitation, you agree not to rely on the TeleNav Software for critical navigation in areas where the well-being or survival of you or others is dependent on the accuracy of navigation, as the maps or functionality of the TeleNav Software are not intended to support such high risk applications, especially in more remote geographical areas.
- TELENAV EXPRESSLY DISCLAIMS AND EXCLUDES ALL WARRANTIES IN CONNECTION WITH THE TELENAV SOFTWARE, WHETHER STATUTORY, EXPRESS OR IMPLIED, INCLUDING ALL WARRANTIES WHICH MAY ARISE FROM COURSE OF DEALING, CUSTOM OR TRADE AND INCLUDING, BUT NOT LIMITED TO, THE IMPLIED WARRANTIES OF MERCHANTABILITY, FITNESS FOR A PARTICULAR PURPOSE AND NON-INFRINGEMENT OF THIRD PARTY RIGHTS WITH RESPECT TO THE TELENAV SOFTWARE.
- Certain jurisdictions do not permit the disclaimer of certain warranties, so this limitation may not apply to you.

5. Limitation of Liability

- TO THE EXTENT PERMITTED UNDER APPLICABLE LAW, UNDER NO CIRCUMSTANCES SHALL TELENAV OR ITS LICENSORS AND SUPPLIERS BE LIABLE TO YOU OR TO ANY THIRD PARTY FOR ANY INDIRECT, INCIDENTAL, CONSEQUENTIAL, SPECIAL OR EXEMPLARY DAMAGES (INCLUDING IN EACH CASE, BUT NOT LIMITED TO, DAMAGES FOR THE INABILITY TO USE THE EQUIPMENT OR ACCESS DATA, LOSS OF DATA, LOSS OF BUSINESS, LOSS OF PROFITS, BUSINESS INTERRUPTION OR THE LIKE) ARISING OUT OF THE USE OF OR INABILITY TO USE THE TELENAV SOFTWARE, EVEN IF TELENAV HAS BEEN ADVISED OF THE POSSIBILITY OF SUCH DAMAGES. NOTWITHSTANDING ANY DAMAGES THAT YOU MIGHT INCUR FOR ANY

Transit (TTS) Vehicles Built From: 27-01-2020 Vehicles Built Up To: 20-09-2020, CG3796en enGBR, Edition date: 201911, First-Printing

REASON WHATSOEVER (INCLUDING, WITHOUT LIMITATION, ALL DAMAGES REFERENCED HEREIN AND ALL DIRECT OR GENERAL DAMAGES IN CONTRACT, TORT (INCLUDING NEGLIGENCE) OR OTHERWISE), THE ENTIRE LIABILITY OF TELENAV AND OF ALL OF TELENAV'S SUPPLIERS SHALL BE LIMITED TO THE AMOUNT ACTUALLY PAID BY YOU FOR THE TELENAV SOFTWARE. SOME STATES AND/OR JURISDICTIONS DO NOT ALLOW THE EXCLUSION OR LIMITATION OF INCIDENTAL OR CONSEQUENTIAL DAMAGES, SO THE ABOVE LIMITATIONS OR EXCLUSIONS MAY NOT APPLY TO YOU.

6. Arbitration and Governing Law

- You agree that any dispute, claim or controversy arising out of or relating to this Agreement or the TeleNav Software shall be settled by independent arbitration involving a neutral arbitrator and administered by the American Arbitration Association in the County of Santa Clara, California. The arbitrator shall apply the Commercial Arbitration Rules of the American Arbitration Association, and the judgment upon the award rendered by the arbitrator may be entered by any court having jurisdiction. Note that there is no judge or jury in an arbitration proceeding and the decision of the arbitrator shall be binding upon both parties. You expressly agree to waive your right to a jury trial. This Agreement and performance hereunder will be governed by and construed in accordance with the laws of the State of California, without giving effect to its conflict of law provisions. To the extent judicial action is necessary in connection with the binding arbitration, both TeleNav and you agree to submit to the exclusive jurisdiction of the courts of the County of Santa Clara, California. The United Nations Convention on Contracts for the International Sale of Goods shall not apply.

7. Assignment

- You may not resell, assign, or transfer this Agreement or any of your rights or obligations, except in totality, in connection with your permanent transfer of the TeleNav Software, and expressly conditioned upon the new user of the TeleNav Software agreeing to be bound by the terms and conditions of this Agreement. Any such sale, assignment or transfer that is not expressly permitted under this paragraph will result in immediate termination of this Agreement, without liability to TeleNav, in which case you and all other parties shall immediately cease all use of the TeleNav Software. Notwithstanding the foregoing, TeleNav may assign this Agreement to any other party at any time without notice, provided the assignee remains bound by this Agreement.

8. Miscellaneous

8.1

This Agreement constitutes the entire agreement between TeleNav and you with respect to the subject matter hereof.

8.2

Except for the limited licenses expressly granted in this Agreement, TeleNav retains all right, title and interest in and to the TeleNav Software, including without limitation all related intellectual property rights. No licenses or other rights which are not expressly granted in this Agreement are intended to, or shall be, granted or

Transit (TTS) Vehicles Built From: 27-01-2020 Vehicles Built Up To: 20-09-2020, CG3796en enGBR, Edition date: 201911, First-Printing

conferred by implication, statute, inducement, estoppel or otherwise, and TeleNav and its suppliers and licensors hereby reserve all of their respective rights other than the licenses explicitly granted in this Agreement.

8.3

By using the TeleNav Software, you consent to receive from TeleNav all communications, including notices, agreements, legally required disclosures or other information in connection with the TeleNav Software (collectively, "Notices") electronically. TeleNav may provide such Notices by posting them on TeleNav's Website or by downloading such Notices to your wireless device. If you desire to withdraw your consent to receive Notices electronically, you must discontinue your use of the TeleNav Software.

8.4

TeleNav's or your failure to require performance of any provision shall not affect that party's right to require performance at any time thereafter, nor shall a waiver of any breach or default of this Agreement constitute a waiver of any subsequent breach or default or a waiver of the provision itself.

8.5

If any provision herein is held unenforceable, then such provision will be modified to reflect the intention of the parties, and the remaining provisions of this Agreement will remain in full force and effect.

8.6

The headings in this Agreement are for convenience of reference only, will not be deemed to be a part of this Agreement, and will not be referred to in connection with the construction or interpretation of this Agreement. As used in this Agreement, the words "include" and "including" and variations thereof, will not be deemed to be terms of limitation, but rather will be deemed to be followed by the words "without limitation".

9. Other Vendors Terms and Conditions

- The Telenav Software utilizes map and other data licensed to Telenav by third party vendors for the benefit of you and other end users. This Agreement includes end-user terms applicable to these companies (included at the end of this Agreement), and thus your use of the Telenav Software is also subject to such terms. You agree to comply with the following additional terms and conditions, which are applicable to Telenav's third party vendor licensors::

9.1 End User Terms Required by HERE North America, LLC

The data ("Data") is provided for your personal, internal use only and not for resale. It is protected by copyright, and is subject to the following terms and conditions which are agreed to by you, on the one hand, and Telenav ("Telenav") and its licensors (including their licensors and suppliers) on the other hand.

© 2013 HERE. All rights reserved.

The Data for areas of Canada includes information taken with permission from Canadian authorities, including: © Her Majesty the Queen in Right of Canada, © Queen's Printer for Ontario, © Canada Post Corporation, GeoBase®, © Department of Natural Resources Canada.

Transit (TTS) Vehicles Built From: 27-01-2020 Vehicles Built Up To: 20-09-2020, CG3796en enGBR, Edition date: 201911, First-Printing

HERE holds a non-exclusive license from the United States Postal Service® to publish and sell ZIP+4® information.

©United States Postal Service® 2014. Prices are not established, controlled or approved by the United States Postal Service®. The following trademarks and registrations are owned by the USPS: United States Postal Service, USPS, and ZIP+4

The Data for Mexico includes certain data from Instituto Nacional de Estadística y Geografía.

9.2 End User Terms Required by NAV2 (Shanghai) Co., Ltd

The data ("Data") is provided for your personal, internal use only and not for resale. It is protected by copyright, and is subject to the following terms and conditions which are agreed to by you, on the one hand, and NAV2 (Shanghai) Co., Ltd ("NAV2") and its licensors (including their licensors and suppliers) on the other hand. 20xx. All rights reserved

Terms and Conditions

Permitted Use. You agree to use this Data together with the Telenav Software solely for the internal business and personal purposes for which you were licensed, and not for service bureau, time-sharing or other similar purposes. Accordingly, but subject to the restrictions set forth in the following paragraphs, you agree not to otherwise reproduce, copy, modify, decompile, disassemble, create any derivative works of, or reverse engineer any portion of this Data, and may not transfer or distribute it in any form, for any purpose, except to the extent permitted by mandatory laws.

Restrictions. Except where you have been specifically licensed to do so by Telenav, and without limiting the preceding paragraph, you may not use this Data (a) with any products, systems, or applications installed or otherwise connected to or in communication with vehicles, capable of vehicle navigation, positioning, dispatch, real time route guidance, fleet management or similar applications; or (b) with or in communication with any positioning devices or any mobile or wireless-connected electronic or computer devices, including without limitation cellular phones, palmtop and handheld computers, pagers, and personal digital assistants or PDAs.

Warning. The Data may contain inaccurate or incomplete information due to the passage of time, changing circumstances, sources used and the nature of collecting comprehensive geographic data, any of which may lead to incorrect results.

No Warranty. This Data is provided to you "as is," and you agree to use it at your own risk. Telenav and its licensors (and their licensors and suppliers) make no guarantees, representations or warranties of any kind, express or implied, arising by law or otherwise, including but not limited to, content, quality, accuracy, completeness, effectiveness, reliability, fitness for a particular purpose, usefulness, use or results to be obtained from this Data, or that the Data or server will be uninterrupted or error-free.

Disclaimer of Warranty: TELENAV AND ITS LICENSORS (INCLUDING THEIR LICENSORS AND SUPPLIERS) DISCLAIM ANY WARRANTIES, EXPRESS OR IMPLIED, OF QUALITY, PERFORMANCE, MERCHANTABILITY, FITNESS FOR A

Transit (TTS) Vehicles Built From: 27-01-2020 Vehicles Built Up To: 20-09-2020, CG3796en enGBR, Edition date: 201911, First-Printing

PARTICULAR PURPOSE OR NON-INFRINGEMENT. Some States, Territories and Countries do not allow certain warranty exclusions, so to that extent the above exclusion may not apply to you.

Disclaimer of Liability: TELENAV AND ITS LICENSORS (INCLUDING THEIR LICENSORS AND SUPPLIERS) SHALL NOT BE LIABLE TO YOU: IN RESPECT OF ANY CLAIM, DEMAND OR ACTION, IRRESPECTIVE OF THE NATURE OF THE CAUSE OF THE CLAIM, DEMAND OR ACTION ALLEGING ANY LOSS, INJURY OR DAMAGES, DIRECT OR INDIRECT, WHICH MAY RESULT FROM THE USE OR POSSESSION OF THE INFORMATION; OR FOR ANY LOSS OF PROFIT, REVENUE, CONTRACTS OR SAVINGS, OR ANY OTHER DIRECT, INDIRECT, INCIDENTAL, SPECIAL OR CONSEQUENTIAL DAMAGES ARISING OUT OF YOUR USE OF OR INABILITY TO USE THIS INFORMATION, ANY DEFECT IN THE INFORMATION, OR THE BREACH OF THESE TERMS OR CONDITIONS, WHETHER IN AN ACTION IN CONTRACT OR TORT OR BASED ON A WARRANTY, EVEN IF TELENAV OR ITS LICENSORS HAVE BEEN ADVISED OF THE POSSIBILITY OF SUCH DAMAGES. Some States, Territories and Countries do not allow certain liability exclusions or damages limitations, so to that extent the above may not apply to you.

Export Control. You shall not export from anywhere any part of the Data or any direct product thereof except in compliance with, and with all licenses and approvals required under, applicable export laws, rules and regulations, including but not limited to the laws, rules and regulations administered by the Office of Foreign Assets Control of the U.S. Department of Commerce and the Bureau of Industry and Security of the U.S. Department of Commerce. To the extent that any such export laws, rules or regulations prohibit HERE from complying with any of its obligations hereunder to deliver or distribute Data, such failure shall be excused and shall not constitute a breach of this Agreement.

Entire Agreement. These terms and conditions constitute the entire agreement between Telenav (and its licensors, including their licensors and suppliers) and you pertaining to the subject matter hereof, and supersedes in their entirety any and all written or oral agreements previously existing between us with respect to such subject matter.

Governing Law. The above terms and conditions shall be governed by the laws of the State of Illinois [insert “Netherlands” where European HERE Data is used], without giving effect to (i) its conflict of laws provisions, or (ii) the United Nations Convention for Contracts for the International Sale of Goods, which is explicitly excluded. You agree to submit to the jurisdiction of the State of Illinois [insert “The Netherlands” where European HERE Data is used] for any and all disputes, claims and actions arising from or in connection with the Data provided to you hereunder.

Government End Users. If the Data is being acquired by or on behalf of the United States government or any other entity seeking or applying rights similar to those customarily claimed by the United States government, this Data is a “commercial item” as that term is defined at 48 C.F.R. (“FAR”) 2.101, is licensed in accordance with these End-User Terms, and each copy of Data delivered or otherwise furnished shall be marked and embedded as appropriate with the following “Notice of Use,” and shall be treated in accordance with such Notice:

Transit (TTS) Vehicles Built From: 27-01-2020 Vehicles Built Up To: 20-09-2020, CG3796en enGBR, Edition date: 201911, First-Printing

NOTICE OF USE
CONTRACTOR (MANUFACTURER/ SUPPLIER) NAME: HERE
CONTRACTOR (MANUFACTURER/ SUPPLIER) ADDRESS: c/o Nokia, 425 West Randolph Street, Chicago, Illinois 60606
This Data is a commercial item as defined in FAR 2.101 and is subject to these End-User Terms under which this Data was provided.
© 1987 – 2014 HERE – All rights reserved.

If the Contracting Officer, federal government agency, or any federal official refuses to use the legend provided herein, the Contracting Officer, federal government agency, or any federal official must notify HERE prior to seeking additional or alternative rights in the Data.

I. US/Canada Territory

A. United States Data. The End-User Terms for any Application containing Data for the United States shall contain the following notices:

"HERE holds a non-exclusive license from the United States Postal Service® to publish and sell ZIP+4® information."

"©United States Postal Service® 20XX. Prices are not established, controlled or approved by the United States Postal Service®. The following trademarks and registrations are owned by the USPS: United States Postal Service, USPS, and ZIP+4."

B. Canada Data. The following provisions apply to the Data for Canada, which may include or reflect data from third party licensors ("Third Party Data"), including Her Majesty the Queen in Right of Canada ("Her Majesty"), Canada Post Corporation ("Canada Post") and the Department of Natural Resources of Canada ("NRCan"):

1. Disclaimer and Limitation: Client agrees that its use of the Third Party Data is subject to the following provisions:

a. Disclaimer: The Third Party Data is licensed on an "as is" basis. The licensors of such data, including Her Majesty, Canada Post and NRCan, make no guarantees, representations or warranties respecting such data, either express or implied, arising by law or otherwise, including but not limited to, effectiveness, completeness, accuracy or fitness for a particular purpose.

b. Limitation on Liability: The Third Party Data licensors, including Her Majesty, Canada Post and NRCan, shall not be liable: (i) in respect of any claim, demand or action, irrespective of the nature of the cause of the claim, demand or action alleging any loss, injury or damages, direct or indirect, which may result from the use or possession of such Data; or (ii) in any way for loss of revenues or contracts, or any other consequential loss of any kind resulting from any defect in the Data.

Transit (TTS) Vehicles Built From: 27-01-2020 Vehicles Built Up To: 20-09-2020, CG3796en enGBR, Edition date: 201911, First-Printing

2. Copyright Notice: In connection with each copy of all or any portion of the Data for the Territory of Canada, Client shall affix in a conspicuous manner the following copyright notice on at least one of: (i) the label for the storage media of the copy; (ii) the packaging for the copy; or (iii) other materials packaged with the copy, such as user manuals or end user license agreements: "This data includes information taken with permission from Canadian authorities, including © Her Majesty the Queen in Right of Canada, © Queen's Printer for Ontario, © Canada Post Corporation, GeoBase®, © The Department of Natural Resources Canada. All rights reserved."

3. End-User Terms: Except as otherwise agreed by the parties, in connection with the provision of any portion of the Data for the Territory of Canada to End-Users as may be authorized under the Agreement, Client shall provide such End-Users, in a reasonably conspicuous manner, with terms (set forth with other end user terms required to be provided under the Agreement, or as otherwise may be provided, by Client) which shall include the following provisions on behalf of the Third Party Data licensors, including Her Majesty, Canada Post and NRCan:

The Data may include or reflect data of licensors, including Her Majesty the Queen in the Right of Canada ("Her Majesty"), Canada Post Corporation ("Canada Post") and the Department of Natural Resources Canada ("NRCan"). Such data is licensed on an "as is" basis. The licensors, including Her Majesty, Canada Post and NRCan, make no guarantees, representations or warranties respecting such data, either express or implied, arising by law or otherwise, including but not limited to, effectiveness, completeness, accuracy or fitness for a particular purpose. The licensors, including Her Majesty, Canada Post and NRCan, shall not be liable in respect of any claim, demand or action, irrespective of the nature of the cause of the claim, demand or action alleging any loss, injury or damages, direct or indirect, which may result from the use or possession of the data or the Data. The licensors, including Her Majesty, Canada Post and NRCan, shall not be liable in any way for loss of revenues or contracts, or any other consequential loss of any kind resulting from any defect in the data or the Data.
End User shall indemnify and save harmless the licensors, including Her Majesty, Canada Post and NRCan, and their officers, employees and agents from and against any claim, demand or action, irrespective of the nature of the cause of the claim, demand or action, alleging loss, costs, expenses, damages or injuries (including injuries resulting in death) arising out of the use or possession of the data or the Data.

4. Additional Provisions: The terms contained in this Section are in addition to all of the rights and obligations of the parties under the Agreement. To the extent that any of the provisions of this Section are inconsistent with, or conflict with, any other provisions of the Agreement, the provisions of this Section shall prevail.

Transit (TTS) Vehicles Built From: 27-01-2020 Vehicles Built Up To: 20-09-2020, CG3796en enGBR, Edition date: 201911, First-Printing

II. Mexico. The following provision applies to the Data for Mexico, which includes certain data from the Instituto Nacional de Estadística y Geografía ("INEGI"):

A. Any and all copies of the Data and/or packaging containing Data for Mexico shall contain the following notice: "Fuente: INEGI (Instituto Nacional de Estadística y Geografía)"

III. Latin America Territory

A. Third Party Notices. Any and all copies of the Data and/or packaging relating thereto shall include the respective Third Party Notices set forth below and used as described below corresponding to the Territory (or portion thereof) included in such copy:

Territory	Notice
Argentina	IGN "INSTITUTO GEOGRAFICO NACIONAL ARGENTINO"
Ecuador	"INSTITUTO GEOGRAFICO MILITAR DEL ECUADOR AUTORIZACION Nº IGM-2011-01- PCO-01 DEL 25 DE ENERO DE 2011" "source: © IGN 2009 - BD TOPO ®"
Guadeloupe, French Guiana and Martinique	
Mexico	"Fuente: INEGI (Instituto Nacional de Estadística y Geografía)"

IV. Middle East Territory

A. Third Party Notices. Any and all copies of the Data and/or packaging relating thereto shall include the respective Third Party Notices set forth below and used as described below corresponding to the Territory (or portion thereof) included in such copy:

Country	Notice
Jordan	"© Royal Jordanian Geographic Centre". The foregoing notice requirement for Jordan Data is a material term of the Agreement. If Client or any of its permitted sublicensees (if any) fail to meet such requirement, HERE shall have the right to terminate Client's license with respect to the Jordan Data.

B. Jordan Data. Client and its permitted sublicensees (if any) are restricted from licensing and/or otherwise distributing HERE's database for the country of Jordan ("Jordan Data") for use in Enterprise Applications to (i) non-Jordanian entities for use of the Jordan Data solely in Jordan or (ii) Jordan-based customers. In addition, Client, its permitted sublicensees (if any) and End-Users are restricted from using the Jordan Data in Enterprise Applications if such party is (i) a non-Jordanian entity using the Jordan Data solely in Jordan or (ii) a Jordan-based customer. For purposes of the foregoing, "Enterprise Applications" shall mean Geomarketing applications, GIS applications, mobile business asset management applications, call center applications, telematics applications, public organization Internet applications or for providing geocoding services.

Transit (TTS) Vehicles Built From: 27-01-2020 Vehicles Built Up To: 20-09-2020, CG3796en enGBR, Edition date: 201911, First-Printing

V. Europe Territory

A. Use of Certain Traffic Codes in Europe

1. General Restrictions Applicable to Traffic Codes. Client acknowledges and agrees that in certain countries of the Europe Territory, Client will need to obtain rights directly from third party RDS-TMC code providers to receive and use the Traffic Codes in the Data and to deliver to End-Users Transactions in any way derived from or based on such Traffic Codes. For such countries, HERE shall deliver the Data incorporating Traffic Codes to Client only after receiving certification from Client of its having obtained such rights.

2. Display of Third Party Rights Legends for Belgium. Client shall, for each Transaction that uses Traffic Codes for Belgium, provide the following notice to the End-User: "Traffic Codes for Belgium are provided by the Ministerie van de Vlaamse Gemeenschap and the Ministèrie de l'Equipement et des Transports."

B. Paper Maps. With respect to any license granted to Client relating to making, selling or distributing paper maps (i.e., a map fixed on a paper or paper-like medium): (a) such license with respect to Data for the Territory of Great Britain is conditioned on Client's entering into and complying with a separate written agreement with the Ordnance Survey ("OS") to create and sell paper maps, Client's paying to the OS any and all applicable paper map royalties, and Client's complying with the OS copyright notice requirements; (b) such license for selling or otherwise distributing for charge with respect to Data for the Territory of Czech Republic is conditioned on Client's obtaining prior written consent from Kartografie a.s.; (c) such license for selling or distributing with respect to Data for the Territory of Switzerland is conditioned on Client's obtaining a permit from Bundesamt für Landestopografie of Switzerland; (d) Client is restricted from using Data for the Territory of France to create paper maps with a scale between 1:5,000 and 1:250,000; and (e) Client is restricted from using any Data to create, sell or distribute paper maps that are the same or substantially similar, in terms of data content and specific use of color, symbols and scale, to paper maps published by the European national mapping agencies, including without limitation, Landervermessungämter of Germany, Topografische Dienst of the Netherlands, Nationaal Geografisch Instituut of Belgium, Bundesamt für Landestopografie of Switzerland, Bundesamt für Eich-und Vermessungswesen of Austria, and the National Land Survey of Sweden.

C. OS Enforcement. Without limiting Section IV(B) above, with respect to Data for the Territory of Great Britain, Client acknowledges and agrees that the Ordnance Survey ("OS") may bring a direct action against Client to enforce compliance with the OS copyright notice (see Section IV(D) below) and paper map requirements (see Section IV(B) above) contained in this Agreement.

D. Third Party Notices. Any and all copies of the Data and/or packaging relating thereto shall include the respective Third Party Notices set forth below and used as described below corresponding to the Territory (or portion thereof) included in such copy:

Country(ies) Notice

Transit (TTS) Vehicles Built From: 27-01-2020 Vehicles Built Up To: 20-09-2020, CG3796en enGBR, Edition date: 201911, First-Printing

Austria	"© Bundesamt für Eich- und Vermessungswesen"
Croatia Cyprus, Estonia, Latvia, Lithuania, Moldova, Poland, Slovenia and/or Ukraine	"© EuroGeographics"
France	"source: © IGN 2009 – BD TOPO ®"
Germany	"Die Grundlagendaten wurden mit Genehmigung der zuständigen Behörden entnommen"
Great Britain	"Contains Ordnance Survey data © Crown copyright and database right 2010 Contains Royal Mail data © Royal Mail copyright and database right 2010"
Greece	"Copyright Geomatics Ltd."
Hungary	"Copyright © 2003; Top-Map Ltd."
Italy	"La Banca Dati Italiana è stata prodotta usando quale riferimento anche cartografia numerica ed al tratto prodotta e fornita dalla Regione Toscana."
Norway	"Copyright © 2000; Norwegian Mapping Authority"
Portugal	"Source: IgeoE – Portugal"
Spain	"Información geográfica propiedad del CNIG"
Sweden	"Based upon electronic data © National Land Survey Sweden."
Switzerland	"Topografische Grundlage: © Bundesamt für Landestopographie.

E. Respective Country Distribution. Client acknowledges that HERE has not received approvals to distribute map data for the following countries in such respective countries: Albania, Belarus, Kyrgyzstan, Moldova and Uzbekistan. HERE may update such list from time to time. The license rights granted to Client under this TL with respect to the Data for such countries are contingent upon Client's compliance with all applicable laws and regulations, including, without limitation, any required licenses or approvals to distribute the Application incorporating such Data in such respective countries.

VI. Australia Territory

A. Third Party Notices. Any and all copies of the Data and/or packaging relating thereto shall include the respective Third Party Notices set forth below and used as described below corresponding to the Territory (or portion thereof) included in such copy:

Copyright. Based on data provided under license from PSMA Australia Limited (www.psma.com.au).

Transit (TTS) Vehicles Built From: 27-01-2020 Vehicles Built Up To: 20-09-2020, CG3796en enGBR, Edition date: 201911, First-Printing

Product incorporates data which is © 20XX Telstra Corporation Limited, GM Holden Limited, Intelematics Australia Pty Ltd and Continental Pty Ltd.

B. Third Party Notices for Australia. In addition to the foregoing, the End-User Terms for any Application containing RDS-TMC Traffic Codes for Australia shall contain the following notice: "Product incorporates traffic location codes which is © 20XX Telstra Corporation Limited and its licensors."

AT&T Vehicle Network Carrier Telematics Disclosure

END USER FOR PURPOSES OF THIS SECTION MEANS YOU AND YOUR HEIRS, EXECUTORS, LEGAL PERSONAL REPRESENTATITVES AND PERMITED ASSIGNS. FOR PURPOSES OF THIS SECTION "UNDERLYING WIRELESS SERVICE CARRIER" INCLUDES ITS AFFILIATES AND CONTRACTORS AND THEIR RESPECTIVE OFFICERS, DIRECTORS, EMPLOYEES, SUCCESSORS AND ASSIGNS. END USER HAS NO CONTRACTUAL RELATIONSHIP WITH THE UNDERLYING WIRELESS SERVICE CARRIER AND END USER IS NOT A THIRD PARTY BENEFICIARY OF ANY AGREEMENT BETWEEN FORD AND UNDERLYING CARRIER. END USER UNDERSTANDS AND AGREES THAT THE UNDERLYING CARRIER HAS NO LEGAL, EQUITABLE, OR OTHER LIABILITY OF ANY KIND TO END USER. IN ANY EVENT, REGARDLESS OF THE FORM OF THE ACTION, WHETHER FOR BREACH OF CONTRACT, WARRANTY, NEGLIGENCE, STRICT LIABILITY IN TORT OR OTHERWISE, END USER'S EXCLUSIVE REMEDY FOR CLAIMS ARISING IN ANY WAY IN CONNECTION WITH THIS AGREEMENT, FOR ANY CAUSE WHATSOEVER, INCLUDING BUT NOT LIMITED TO ANY FAILURE OR DISRUPTION OF SERVICE PROVIDED HEREUNDER, IS LIMITED TO PAYMENT OF DAMAGES IN AN AMOUNT NOT TO EXCEED THE AMOUNT PAID BY END USER FOR THE SERVICES DURING THE TWO-MONTH PERIOD PRECEDING THE DATE THE CLAIM AROSE.

(ii) END USER AGREES TO INDEMNIFY AND HOLD HARMLESS THE UNDERLYING WIRELESS SERVICE CARRIER AND ITS OFFICERS, EMPLOYEES, AND AGENTS AGAINST ANY AND ALL CLAIMS, INCLUDING WITHOUT LIMITATION CLAIMS FOR LIBEL, SLANDER, OR ANY PROPERTY DAMAGE, PERSONAL INJURY OR DEATH, ARISING IN ANY WAY, DIRECTLY OR INDIRECTLY, IN CONNECTION WITH THIS AGREEMENT OR THE USE, FAILURE TO USE, OR INABILITY TO USE THE DEVICE EXCEPT WHERE THE CLAIMS RESULT FROM THE UNDERLYING CARRIER'S GROSS NEGLIGENCE OR WILLFUL MISCONDUCT. THIS INDEMNITY WILL SURVIVE THE TERMINATION OF THE AGREEMENT.

(iii) END USER HAS NO PROPERTY RIGHT IN ANY NUMBER ASSIGNED TO THE DEVICE.

(iv) END USER UNDERSTANDS THAT FORD AND THE UNDERLYING CARRIER CANNOT GUARANTY THE SECURITY OF WIRELESS TRANSMISSIONS, AND WILL NOT BE LIABLE FOR ANY LACK OF SECURITY RELATING TO THE USE OF THE SERVICES

THE SERVICE IS FOR [END USER'S] USE ONLY AND END USER MAY NOT RESELL THE SERVICE TO ANY OTHER PARTY END USER UNDERSTANDS THAT THE UNDERLYING CARRIER DOES NOT GUARANTEE ANY END USER UNINTERRUPTED SERVICE OR COVERAGE. THE UNDERLYING CARRIER DOES NOT WARRANT THAT END USERS CAN OR WILL BE LOCATED USING THE SERVICE. THE UNDERLYING CARRIER

Transit (TTS) Vehicles Built From: 27-01-2020 Vehicles Built Up To: 20-09-2020, CG3796en enGBR, Edition date: 201911, First-Printing

MAKES NO WARRANTY, EXPRESS OR IMPLIED, OF MERCHANTABILITY OR FITNESS FOR A PARTICULAR PURPOSE, SUITABILITY, OR PERFORMANCE REGARDING ANY SERVICES OR GOODS, AND IN NO EVENT SHALL AT&T BE LIABLE, WHETHER OR NOT DUE TO ITS OWN NEGLIGENCE, FOR ANY: (A) ACT OR OMISSION OF A THIRD PARTY; (B) MISTAKES, OMISSIONS, INTERRUPTIONS, ERRORS, FAILURES TO TRANSMIT, DELAYS, OR DEFECTS IN THE SERVICE PROVIDED BY OR THROUGH THE UNDERLYING CARRIER; (C) DAMAGE OR INJURY CAUSED BY SUSPENSION OR TERMINATION BY THE UNDERLYING CARRIER; OR (D) DAMAGE OR INJURY CAUSED BY A FAILURE OR DELAY IN CONNECTING A CALL TO ANY ENTITY, INCLUDING 911 OR ANY OTHER EMERGENCY SERVICE. TO THE FULL EXTENT ALLOWED BY LAW, THE END USER RELEASES, INDEMNIFIES AND HOLDS THE UNDERLYING CARRIER HARMLESS FROM AND AGAINST ANY AND ALL CLAIMS OF ANY PERSON OR ENTITY FOR DAMAGES OF ANY NATURE ARISING IN ANY WAY FROM OR RELATING TO, DIRECTLY OR INDIRECTLY, SERVICES PROVIDED BY THE UNDERLYING CARRIER OR ANY PERSON'S USE THEREOF, INCLUDING CLAIMS ARISING IN WHOLE OR IN PART FROM THE ALLEGED NEGLIGENCE OF THE UNDERLYING CARRIER.

VII. China Territory

Personal Use Only

You agree to use this Data together with [insert name of Client Application] for the solely personal, non-commercial purposes for which you were licensed, and not for service bureau, time-sharing or other similar purposes. Accordingly, but subject to the restrictions set forth in the following paragraphs, you may copy this Data only as necessary for your personal use to (i) view it, and (ii) save it, provided that you do not remove any copyright notices that appear and do not modify the Data in any way. You agree not to otherwise reproduce, copy, modify, decompile, disassemble or reverse engineer any portion of this Data, and may not transfer or distribute it in any form, for any purpose, except to the extent permitted by mandatory laws.

Restrictions

Except where you have been specifically licensed to do so by NAV2 , and without limiting the preceding paragraph, you may not (a) use this Data with any products, systems, or applications installed or otherwise connected to or in communication with vehicles, capable of vehicle navigation, positioning, dispatch, real time route guidance, fleet management or similar applications; or (b) with or in communication with any positioning devices or any mobile or wireless-connected electronic or computer devices, including without limitation cellular phones, palmtop and handheld computers, pagers, and personal digital assistants or PDAs. You agree to cease using this Data if you fail to comply with these terms and conditions.

Limited Warranty

NAV2 warrants that (a) the Data will perform substantially in accordance with the accompanying written materials for a period of ninety (90) days from the date of receipt, and (b) any support services provided by NAV2 shall be substantially as described in applicable written materials provided to you by NAV2, and NAV2's support engineers will make commercially reasonable efforts to solve any problem issues.

Transit (TTS) Vehicles Built From: 27-01-2020 Vehicles Built Up To: 20-09-2020, CG3796en enGBR, Edition date: 201911, First-Printing

rigCustomer Remedies

NAV2 and its suppliers' entire liability and your exclusive remedy shall be, at NAV2's sole discretion, either (a) return of the price paid, if any, or (b) repair or replacement of the Data that do not meet NAV2's Limited Warranty and that are returned to NAV2 with a copy of your receipt. This Limited Warranty is void if failure of the Data has resulted from accident, abuse, or misapplication. Any replacement Data will be warranted for the remainder of the original warranty period or thirty (30) days, whichever is longer. Neither these remedies nor any product support services offered by NAV2 are available without proof of purchase from an authorized international source.

No Other Warranty:

EXCEPT FOR THE LMITED WARRANTY SET FORTH ABOVE AND TO THE EXTENT PERMITTED BY APPLICABLE LAW, NAV2 AND ITS LICENSORS (INCLUDING THEIR LICENSORS AND SUPPLIERS) DISCLAIM ANY WARRANTIES, EXPRESS OR IMPLIED, OF QUALITY, PERFORMANCE, MERCHANTABILITY, FITNESS FOR A PARTICULAR PURPOSE, OWNERSHIP OR NON-INFRINGEMENT. Certain warranty exclusions may not be permitted under applicable law, so to that extent the above exclusion may not apply to you.

Limited Liability:

TO THE EXTENT PERMITTED BY APPLICABLE LAW, NAV2 AND ITS LICENSORS (INCLUDING THEIR LICENSORS AND SUPPLIERS) SHALL NOT BE LIABLE TO YOU: IN RESPECT OF ANY CLAIM, DEMAND OR ACTION, IRRESPECTIVE OF THE NATURE OF THE CAUSE OF THE CLAIM, DEMAND OR ACTION ALLEGING ANY LOSS, INJURY OR DAMAGES, DIRECT OR INDIRECT, WHICH MAY RESULT FROM THE USE OR POSSESSION OF THE INFORMATION; OR FOR ANY LOSS OF PROFIT, REVENUE, CONTRACTS OR SAVINGS, OR ANY OTHER DIRECT, INDIRECT, INCIDENTAL, SPECIAL OR CONSEQUENTIAL DAMAGES ARISING OUT OF YOUR USE OF OR INABILITY TO USE THIS INFORMATION, ANY DEFECT IN THE INFROMATION, OR THE BREACH OF THESE TERMS OR CONDITIONS, WHETHER IN AN ACTION IN CONTRACT OR TORT OR BASED ON A WARRANTY, EVEN IF NAV2 OR ITS LICENSORS HAVE BEEN ADVISED OF THE POSSIBILITY OF SUCH DAMAGES. UNDER NO CIRCUMSTANCES SHALL NAV2's OR ITS SUPPLIERS' LIABILITY HEREUNDER EXCEED THE PRICE PAID. Certain liability exclusions may not be permitted under applicable law, so to that extent the above exclusion may not apply to you.

Export Control

You agree not to export to anywhere any part of the Data provided to you or any direct product thereof except in compliance with, and with all licenses and approvals required under, applicable export laws, rules and regulations.

IP Protection

The Data are owned by NAV2 or its suppliers and are protected by applicable copyright and other intellectual property law and treaties. The Data are provided solely on the basis of a license to use, not sale.

Entire Agreement

These terms and conditions constitute the entire agreement between NAV2(and its licensors, including their licensors and suppliers) and you pertaining to the subject matter hereof, and supersedes in their entirety any and all written or oral agreements previously existing between us with respect to such subject matter.

Transit (TTS) Vehicles Built From: 27-01-2020 Vehicles Built Up To: 20-09-2020, CG3796en enGBR, Edition date: 201911, First-Printing

Governing Law.

The above terms and conditions shall be governed by the laws of the People's Republic of China, without giving effect to (i) its conflict of laws provisions, or (ii) the United Nations Convention for Contracts for the International Sale of Goods, which is explicitly excluded. Any dispute arising from or in connection with the Data provided to you hereunder shall be submitted to the Shanghai International Economic and Trade Arbitration Commission for arbitration.

Gracenote® Copyright

CD and music-related data from Gracenote, Inc., copyright©

2000-2007 Gracenote. Gracenote Software, copyright © 2000-2007 Gracenote. This product and service may practice one or more of the following U.S. Patents 5,987,525; 6,061,680; 6,154,773; 6,161,132; 6,230,192; 6,230,207; 6.240,459; 6,330,593 and other patents issued or pending. Some services supplied under license from Open Globe, Inc. for U.S. Patent 6,304,523.

Gracenote and CDDB are registered trademarks of Gracenote. The Gracenote logo and logotype, and the "Powered by Gracenote™" logo are trademarks of Gracenote.

Gracenote® End User License Agreement (EULA)

This device contains software from Gracenote, Inc. of 2000 Powell Street Emeryville, California 94608 ("Gracenote").

The software from Gracenote (the "Gracenote Software") enables this device to do disc and music file identification and obtain music-related information, including name, artist, track, and title information ("Gracenote Data") from online servers ("Gracenote Servers"), and to perform other functions. You may use Gracenote Data only by means of the intended End User functions of this device. This device may contain content belonging to Gracenote's providers. If so, all of the restrictions set forth herein with respect to Gracenote Data shall also apply to such content and such content providers shall be entitled to all of the benefits and protections set forth herein that are available to Gracenote. You agree that you will use the content from Gracenote ("Gracenote Content") , Gracenote Data, the Gracenote Software, and Gracenote Servers for your own personal, non-commercial use only. You agree not to assign, copy, transfer or transmit the Gracenote Content, Gracenote Software or any Gracenote Data (except in a Tag associated with a music file) to any third party. YOU AGREE NOT TO USE OR EXPLOIT GRACENOTE CONTENT, GRACENOTE DATA, THE GRACENOTE SOFTWARE, OR GRACENOTE SERVERS, EXCEPT AS EXPRESSLY PERMITTED HEREIN.

You agree that your non-exclusive licenses to use the Gracenote Content, Gracenote Data, the Gracenote Software, and Gracenote Servers will terminate if you violate these restrictions. If your licenses terminate, you agree to cease any and all use of the Gracenote Content, Gracenote Data, the Gracenote Software, and Gracenote Servers.

Gracenote, respectively, reserve all rights in Gracenote Data, the Gracenote Software, and the Gracenote Servers and Gracenote Content, including all ownership rights. Under no circumstances will either Gracenote become liable for any payment to you for any information that you provide,

Transit (TTS) Vehicles Built From: 27-01-2020 Vehicles Built Up To: 20-09-2020, CG3796en enGBR, Edition date: 201911, First-Printing

including any copyrighted material or music file information. You agree that Gracenote may enforce its respective rights, collectively or separately, under this agreement against you, directly in each company's own name.

Gracenote uses a unique identifier to track queries for statistical purposes. The purpose of a randomly assigned numeric identifier is to allow Gracenote to count queries without knowing anything about who you are. For more information, see the web page at www.gracenote.com for the Gracenote Privacy Policy.

THE GRACENOTE SOFTWARE, EACH ITEM OF GRACENOTE DATA AND THE GRACENOTE CONTENT ARE LICENSED TO YOU "AS IS". NEITHER GRACENOTE MAKES ANY REPRESENTATIONS OR WARRANTIES, EXPRESS OR IMPLIED, REGARDING THE ACCURACY OF ANY GRACENOTE DATA FROM THE GRACENOTE SERVERS OR GRACENOTE CONTENT. GRACENOTE COLLECTIVELY AND SEPARATELY RESERVE THE RIGHT TO DELETE DATA AND/OR CONTENT FROM THE COMPANIES' RESPECTIVE SERVERS OR, IN THE CASE OF GRACENOTE, CHANGE DATA CATEGORIES FOR ANY CAUSE THAT GRACENOTE DEEMS SUFFICIENT. NO WARRANTY IS MADE THAT EITHER GRACENOTE CONTENT OR THE GRACENOTE SOFTWARE OR GRACENOTE SERVERS ARE ERROR-FREE OR THAT THE FUNCTIONING OF THE GRACENOTE SOFTWARE OR GRACENOTE SERVERS WILL BE UNINTERRUPTED. GRACENOTE IS NOT OBLIGATED TO PROVIDE YOU WITH ANY ENHANCED OR ADDITIONAL DATA TYPES THAT GRACENOTE MAY CHOOSE TO PROVIDE IN THE FUTURE AND IS FREE TO DISCONTINUE ITS ONLINE SERVICES AT ANY TIME. GRACENOTE DISCLAIM ALL WARRANTIES EXPRESS OR IMPLIED, INCLUDING, BUT NOT LIMITED TO, IMPLIED WARRANTIES OF MERCHANTABILITY, FITNESS FOR A PARTICULAR PURPOSE, TITLE, AND NON-INFRINGEMENT. NEITHER GRACENOTE WARRANTS THE RESULTS THAT WILL BE OBTAINED BY YOUR USE OF THE GRACENOTE SOFTWARE OR ANY GRACENOTE SERVER. IN NO CASE WILL GRACENOTE BE LIABLE FOR ANY CONSEQUENTIAL OR INCIDENTAL DAMAGES OR FOR ANY LOST PROFITS OR LOST REVENUES FOR ANY REASON WHATSOEVER. © Gracenote 2007.

Taiwan Territory

Note: In accordance with the management approach of low-power radio wave radiation motors:

Article 12: For approved and certified low-power radiation motor models, companies, firms or users must not alter the frequency, increase the power or change the characteristics and functions of the original design without authorization.

Article 14: The usage of low-power radio-frequency motors must not affect aviation safety and interfere with legal telecommunications. Should interference be detected, immediately stop using the device and only resume usage after ensuring that there is no longer any interference. For the legal telecommunication and wireless telecommunication of the telco, the low-power radio frequency motor must be able to tolerate legal limits of interference from telecommunication, industrial, scientific and radio wave equipment.

Transit (TTS) Vehicles Built From: 27-01-2020 Vehicles Built Up To: 20-09-2020, CG3796en enGBR, Edition date: 201911, First-Printing

SUNA TRAFFIC CHANNEL – TERMS AND CONDITIONS

By activating, using and/or accessing the SUNA Traffic Channel, SUNA Predictive or other content or material provided by Intelematics (together, **SUNA Products and/or Services**), you must accept certain terms and conditions. The following is a brief summary of the terms and conditions that apply to you. To view the full terms and conditions relevant to your use of the SUNA Products and/or Services, please consult:

Website
www.sunatraffic.com.au/termsandconditions/

1. Acceptance

By using SUNA Products and/or Services, you will be deemed to have accepted and agreed to be bound by the terms and conditions fully detailed at:

Website
www.sunatraffic.com.au/termsandconditions/

2. Intellectual Property

SUNA Products and/or Services are for your personal use. You may not record, or retransmit the content, nor use the content in association with any other traffic information or route guidance service or device not approved by Intelematics. You obtain no right of ownership in any Intellectual Property Rights (including copyright) in the data that is used to provide SUNA Products and/or Services.

3. Appropriate Use

SUNA Products and/or Services are intended as an aid to personal motoring and travel planning, and do not provide comprehensive or accurate information on all occasions. On occasions, you may experience additional delay as a result of using SUNA Products and/or Services. You acknowledge that it is not intended, or suitable, for use in applications where time of arrival or driving directions may impact the safety of the public or yourself.

4. Use of SUNA Products and Services while driving

You, and other authorised drivers of the vehicle in which SUNA Products and/or Services are available or installed and active, remain at all times responsible for observing all relevant laws and codes of safe driving. In particular, you agree to only actively operate SUNA Products and/or Services when the Vehicle is at a complete stop and it is safe to do so.

5. Service Continuity and Reception of the SUNA Traffic Channel

We will use reasonable endeavours to provide the SUNA Traffic Channel 24 hours a day, 365 days a year. The SUNA Traffic Channel may occasionally be unavailable for technical reasons or for planned maintenance. We will try to perform maintenance at times when congestion is light. We reserve the right to withdraw SUNA Products and/or Services at any time.

Also, we cannot assure the uninterrupted reception of the SUNA Traffic Channel RDS-TMC signal at any particular location.

6. Limitation of Liability

Neither Intelematics (nor its suppliers or the manufacturer of your device (the "**Suppliers**")) shall be liable to you or to any third party for any damages either direct, indirect, incidental, consequential or otherwise arising out of the use of or inability to use SUNA Products and/or

Transit (TTS) Vehicles Built From: 27-01-2020 Vehicles Built Up To: 20-09-2020, CG3796en enGBR, Edition date: 201911, First-Printing

Services even if Intelematics or a Supplier has been advised of the possibility of such damages. You also acknowledge that the neither Intelematics nor any Supplier guarantees nor make any warranties that relate to the availability, accuracy or completeness of SUNA Products and/or Services, and to the extent which it is lawful to do so, both Intelematics and each Supplier excludes any warranties which might otherwise be implied by any State or Federal legislation in relation to SUNA Products and/or Services.

7. Please Note

Great care has been taken in preparing this manual. Constant product development may mean that some information is not entirely up-to-date. The information in this document is subject to change without notice.

DECLARATION OF CONFORMITY

Your vehicle could have components that transmit and receive radio waves and are therefore subject to government regulation.

These components must accept any interference received, including interference that could cause undesired operation. For certification labels and declarations of conformity, visit *www.wirelessconformity.ford.com*.

Transit (TTS) Vehicles Built From: 27-01-2020 Vehicles Built Up To: 20-09-2020, CG3796en enGBR, Edition date: 201911, First-Printing

1

180 Degree Camera....177
Camera Views....178
Front View Camera....177
Using the 180 degree camera system....178

A

A/C
See: Climate Control....95
About This Manual....9
ABS
See: Brakes....157
ABS driving hints
See: Hints on Driving With Anti-Lock Brakes....157
Accessories
See: Replacement Parts Recommendation....15
ACC
See: Using Adaptive Cruise Control....180
Active Park Assist....172
Using Active Park Assist....172
Adjusting the Headlamps....259
Horizontal Aim Adjustment....260
Vertical Aim Adjustment....259
Adjusting the Steering Wheel....65
Air Conditioning
See: Climate Control....95
Alarm
See: Anti-Theft Alarm - Vehicles With: Anti-Theft Alarm Horn with Integral Battery....60
See: Anti-Theft Alarm - Vehicles Without: Anti-Theft Alarm Horn with Integral Battery....59
All-Wheel Drive....156
AM/FM Radio - Vehicles With: SYNC 2.5....325
Using the Radio....325
AM/FM Radio - Vehicles Without: SYNC....324
Selecting a Radio Source....324
Anti-Theft Alarm - Vehicles With: Anti-Theft Alarm Horn with Integral Battery....60
Alarm System....60
Arming the Alarm....61
Disarming the Alarm....61
Guard Settings....60
Triggering the Alarm....60
Anti-Theft Alarm - Vehicles Without: Anti-Theft Alarm Horn with Integral Battery....59
Alarm System....59
Arming the Alarm....59
Disarming the Alarm....59
Triggering the Alarm....59
Appendices....362
Applying the Parking Brake....160
Apps....349
Using Apps on an Android Device....350
Using Apps on an iOS Device....349
Using Mobile Navigation on an Android Device....350
Apps - Vehicles With: SYNC 2.5....329
Apps Troubleshooting....331
Using Android Auto....330
Using Apple CarPlay....329
Using Apps on an Android Device....330
Using Apps on an iOS Device....330
Ashtray....115
At a Glance....18
Audio System....320
General Information....320
Audio Unit Clock and Date Displays - Vehicles With: SYNC 2.5....327
Audio Unit Clock and Date Displays - Vehicles Without: SYNC....327
Adjusting the Clock....327
Audio Unit - Vehicles With: SYNC 2.5....323
Adjusting the Volume....323
Changing Radio Stations....323
Pausing or Playing Media....324
Seek Down and Previous Track Button....324
Seek Up and Next Track Button....323
Sound Settings....324
Switching the Audio Unit On and Off....323
Switching the Screen On and Off....324
Audio Unit - Vehicles With: SYNC 3....322
Adjusting the Volume....322
Changing Radio Stations....322

Transit (TTS) Vehicles Built From: 27-01-2020 Vehicles Built Up To: 20-09-2020, CG3796en enGBR, Edition date: 201911, First-Printing

Pausing or Playing Media....323
Seek Down and Previous Track Button....323
Seek Up and Next Track Button....322
Sound Settings....323
Switching the Audio Unit On and Off....322
Switching the Screen On and Off....323
Audio Unit - Vehicles Without: SYNC....320
Adjusting the Volume....320
Changing Radio Stations....320
Pausing or Playing Media....321
Returning to the Previous Screen....321
Scrolling Through the Menu Options....321
Seek Down and Previous Track Button....321
Seek Up and Next Track Button....321
Selecting a Menu Option....321
Selecting Media....321
Selecting the Radio....320
Sound Settings....322
Switching the Audio Unit On and Off....320
Switching the Screen On and Off....322
System Settings....322
Using a Cell Phone....322
Autolamps....71
Adjusting the Period of Time That the Headlamps Remain On....72
Automatic Crash Notification System....37
Automatic High Beam Control....72
About Automatic High Beam Control....72
Automatic High Beam Control Information Messages....73
Automatic High Beam Indicator....73
Overriding Automatic High Beam Control....73
Switching Automatic High Beam Control On or Off....73
Automatic Transmission - 10-Speed Automatic Transmission....152
Automatic Transmission Information Messages....155
Brake Shift Interlock....153
Progressive Range Selection....153
Selector Lever Positions....152
SelectShift™....153
Transmission Not in Park (P) Audible Warning....155
Automatic Transmission - 6-Speed Automatic Transmission....149
Automatic Transmission Information Messages....152
Brake Shift Interlock....150
Selector Lever Positions....149
SelectShift™....150
Transmission Not in Park (P) Audible Warning....151
Auto-Start-Stop Audible Warning....126
Auto-Start-Stop....125
Auto-Start-Stop Settings....128
Auto-Start-Stop – Troubleshooting....126
Auto-Start-Stop Indicators....126
Auto-Start-Stop Precautions....125
Auto-Start-Stop Settings....128
Setting the Engine Stop Speed....128
Auto-Start-Stop – Troubleshooting....126
Auto-Start-Stop – Frequently Asked Questions....127
Auto-Start-Stop – Information Messages....126
Autowipers....66
Settings....67
Auxiliary Heater....98
Parking Heater....98
Principle of Operation....98
Using the Auxiliary Heater....98
Auxiliary Power Points....112
230 Volt - 150 Watt Capacity AC Power Outlet....112
230 Volt - 400 Watt Capacity AC Power Outlet....113
AWD
See: All-Wheel Drive....156

B

Battery
See: Changing the 12V Battery....257
Bed Access....218
Accessing the Load Bed....219
Opening the Side Panel....218

Transit (TTS) Vehicles Built From: 27-01-2020 Vehicles Built Up To: 20-09-2020, CG3796en enGBR, Edition date: 201911, First-Printing

Blind Spot Information System.....197
Blind Spot Information System Indicator.....198
Blind Spot Information System Information Messages.....200
Blind Spot Information System Sensors.....197
Blind Spot Information System Warning Lamp.....200
Blind Spot Information System with Trailer Tow.....198
Switching the Blind Spot Information System On and Off.....198
Using the Blind Spot Information System.....197
BLIS
See: Blind Spot Information System.....197
Body Styling Kits.....272
Bonnet Lock
See: Opening and Closing the Hood.....248
Bottle Holders.....115
Brake Fluid Check.....256
Brakes.....157
General Information.....157
Breaking-In.....225
Brakes and Clutch.....225
Engine.....225
Tires.....225
Bulb Specification Chart - Vehicles With: Halogen Headlamps.....310
Bulb Specification Chart - Vehicles With: High Intensity Discharge Headlamps.....312

C

Capacities and Specifications.....307
Air Conditioning System.....307
Brake System.....310
Diesel Exhaust Fluid (AdBlue) Tank.....310
Engine.....308
Fuel Tank.....309
Washer Reservoir.....310
Car Wash
See: Cleaning the Exterior.....269
Changing a Bulb.....263
Central High Mounted Brake Lamp.....266
Front Fog Lamps.....265
Headlamp.....263
Interior Lamp.....267
License Plate Lamp.....267
Reading Lamps.....268
Rear Lamps.....266
Side Repeater.....265
Sun Visor Mirror Lamp.....268
Changing a Fuse.....246
Fuses.....246
Changing a Road Wheel.....282
Front Jacking Points.....285
Installing a Road Wheel.....288
Locking Lug Nuts.....282
Rear Jacking Points.....286
Removing a Road Wheel.....288
Stowing the Wheel and Vehicle Jack.....289
Vehicle Jack.....284
Vehicles with a Spare Wheel.....282
Changing the 12V Battery.....257
Removing the Battery.....257
Replacing the Battery.....259
Changing the Front Wiper Blades.....261
Changing the Rear Wiper Blades.....261
Changing the Wi-Fi Hotspot Name or Password.....319
Checking MyKey System Status.....46
Checking the Wiper Blades.....261
Child Restraint Positioning.....25
Child Safety.....21
Child Safety Locks - Vehicles With: Power Sliding Door.....29
Child Safety Locks Information Messages.....29
Child Safety Locks - Vehicles Without: Power Sliding Door.....29
Left-Hand Side.....29
Right-Hand Side.....29
Cigar Lighter.....114
Cleaning the Exterior.....269
BodyPaintwork Preservation.....270
Cleaning Stripes or Graphics.....269
Cleaning the Chrome Trim.....269
Cleaning the Headlamps.....269
Cleaning the Rear Window.....269
Cleaning the Interior.....270
Fabric, Carpets, Cloth Seats, Headliners and Floor Mats.....270

Transit (TTS) Vehicles Built From: 27-01-2020 Vehicles Built Up To: 20-09-2020, CG3796en enGBR, Edition date: 201911, First-Printing

Instrument Cluster Screens, LCD Screens and Radio Screens....271
Leather Interior....271
Mirrors....271
Rear Windows....271
Seatbelts....270
Storage Compartments, Cup Holders and Ashtrays....272
Suede Micro Fiber Fabric....271
Cleaning the Wheels....272
Clearing All MyKeys....45
Climate Control....95
Closing the Sliding Door....52
Closing the Sliding Door From Inside Your Vehicle....52
Closing the Sliding Door From Outside Your Vehicle....53
Closing the Sliding Door With the Remote Control....56
Clutch Fluid Check....256
Cold Weather Precautions....224
Connected Vehicle....315
Connecting the Vehicle to a Mobile Network....315
Connected Vehicle Limitations....315
Connected Vehicle Requirements....315
Connected Vehicle – Troubleshooting - Vehicles With: Modem....316
Connected Vehicle – Troubleshooting - Vehicles With: SYNC 3/SYNC 2.5....317
Connecting a Bluetooth® Device - Vehicles With: SYNC 2.5....327
Connecting a Bluetooth® Device - Vehicles Without: SYNC....327
Pairing a Device....327
Connecting the Vehicle to a Mobile Network....315
Connecting FordPass to the Modem....315
Enabling and Disabling the Modem....315
What Is the Modem....315
Connecting the Vehicle to a Wi-Fi Network....315
Coolant Check
See: Engine Coolant Check....254
Cornering Lamps....75
Creating a MyKey....44
MyKey Information Messages....44
Creating a Wi-Fi Hotspot....319
Connecting a Device to the Wi-Fi Hotspot....319
Finding the Wi-Fi Hotspot Name and Password....319
Cross Traffic Alert....200
Cross Traffic Alert behavior when trailer is attached....203
Cross Traffic Alert Indicator....203
Cross Traffic Alert Information Messages....203
Cross Traffic Alert System Limitations....202
Cross Traffic Alert System Sensors....202
Switching the System On and Off....203
Using Cross Traffic Alert....201
Cruise Control....179
Principle of Operation....179
Cruise control
See: Using Cruise Control....179
Cup Holders....115

D

Data Recording....11
Comfort, Convenience and Entertainment Data....13
Event Data....12
Service Data....12
Services That Third Parties Provide....13
Services That We Provide....13
Vehicles With a Modem....13
Vehicles With an Emergency Call System....14
Vehicles With SYNC....14
Declaration of Conformity....390
Device Holder....117
Diesel Particulate Filter....144
Diesel Particulate Filter Automatic Regeneration....145
Diesel Particulate Filter Information Messages....148
Diesel Particulate Filter Manual Regeneration....146
On-Board Diagnostics System....145
Digital Radio - Vehicles With: SYNC 2.5....326
Using the Radio....326

Transit (TTS) Vehicles Built From: 27-01-2020 Vehicles Built Up To: 20-09-2020, CG3796en enGBR, Edition date: 201911, First-Printing

Digital Radio - Vehicles Without: SYNC....325
Selecting a Radio Source....325
Direction Indicators....76
Direction Indicator....76
Switching the Direction Indicators On and Off....76
Doors and Locks....48
Draining the Fuel Filter Water Trap....254
Draining the Fuel Filter Water Trap....254
Drive Control....212
Selectable Drive Modes....212
Selectable Drive Modes Information Messages....213
Driver Airbag....33
Driver Alert....191
Driver Alert System Display....192
Driver Alert System Messages....193
Driver Alert System Warnings....191
Switching Driver Alert On or Off....192
Driving Aids....189
Driving Hints....224
Driving Through Water....225

E

Eco....207
Eco Mode....207
Efficient Drive Mode....207
Economical Driving....224
Electromagnetic Compatibility....362
Emergency Assistance....37
Emergency Equipment....232
Emergency Exit....227
End User License Agreement....365
VEHICLE SOFTWARE END USER LICENSE AGREEMENT (EULA) 365
Engine Coolant Check....254
Adding Coolant....255
Engine Cooling Fan....254
Engine Emission Control....140
Engine Immobilizer
See: Passive Anti-Theft System....59
Engine Oil Check....253
Adding Engine Oil....253
Engine Oil Pressure Warning Lamp....253
Engine Oil Dipstick....253
Entertainment....341
Playing Music From a USB or Media Player....343
Streaming Music From a Bluetooth Device....342
Using the Radio....341
Environment....17
Event Data Recording
See: Data Recording....11
Exterior Mirrors....80
Fold-Away Exterior Mirrors....81
Power Exterior Mirrors....80
Power Folding Mirrors....80

F

Fan
See: Engine Cooling Fan....254
Fastening the Seatbelts....30
Using Seatbelts During Pregnancy....30
Flat Tire
See: Changing a Road Wheel....282
Flat Tire Inflation
See: Tire Sealant and Inflator Kit....273
Floor Mats....225
Fog Lamps - Front
See: Front Fog Lamps....74
Fog Lamps - Rear
See: Rear Fog Lamps....74
Front Door Storage Compartment....117
Front Fog Lamps....74
Front Fog Lamp Indicator....74
Switching the Front Fog Lamps On or Off....74
Front Parking Aid....168
Front Parking Aid Information Messages....170
Object Distance Indicator....169
Front View Camera....212
Using the Front View Camera....212
Front Wiper Blades
See: Changing the Front Wiper Blades....261
Fuel and Refueling....134
Fuel Burning Heater
See: Auxiliary Heater....98
Fuel Consumption Figures - 2.0L EcoBlue....314

Transit (TTS) Vehicles Built From: 27-01-2020 Vehicles Built Up To: 20-09-2020, CG3796en enGBR, Edition date: 201911, First-Printing

Fuel Consumption Figures.....314
European Directive 1999/94/EC.....314
Fuel Economy and CO2 Emissions.....314
Fuel Consumption.....139
Advertised Capacity.....139
Fuel Economy.....139
Fuel Filler Funnel Location.....135
Fuel Filter Service Indicator Check.....260
Fuel Quality - Diesel.....135
Long-Term Storage.....135
Fuel Quality - Hydrotreated Vegetable Oil.....134
Fuel Shutoff.....227
Ignition Switch.....227
Keyless Starting.....227
Fuse Box Locations.....233
Body Control Module.....233
Driver Compartment Fuse Box.....233
Engine Compartment Fuse Box.....233
Passenger Compartment Fuse Box.....233
Pre-fuse Box.....233
Fuses.....233
Fuse Specification Chart.....234
Body Control Module.....241
Driver Compartment Fuse Box.....237
Engine Compartment Fuse Box.....234
Passenger Compartment Fuse Box.....243
Pre-fuse Box.....245

G

Gauges.....83
Automatic Transmission Position Indicators.....84
Engine Coolant Temperature Gauge.....84
Fuel Gauge.....84
Information Display.....83
Instrument Cluster.....83
Speedometer.....84
Tachometer.....83
Gearbox
See: Transmission.....149
General Information on Radio Frequencies.....40

H

Hazard Flashers.....227
Hazard Flasher Indicator.....227
Switching the Hazard Flashers On or Off.....227
Headlamp Adjusting
See: Adjusting the Headlamps.....259
Headlamp Exit Delay.....72
Headlamp Leveling.....74
Headlamp Removal
See: Removing a Headlamp.....262
Headrest
See: Head Restraints.....103
Head Restraints.....103
Adjusting the Head Restraint.....104
Removing the Head Restraint.....104
Heated Exterior Mirrors - Vehicles With: Heated Rear Window.....97
Heated Exterior Mirrors - Vehicles Without: Heated Rear Window.....97
Heated Rear Window.....97
Heated Seats.....111
Heated Windshield.....97
Heating
See: Climate Control.....95
Hill Start Assist.....157
Hill Start Assist Information Messages.....159
Switching Hill Start Assist On or Off.....158
Using Hill Start Assist.....158
Hints on Controlling the Interior Climate.....96
Defogging or Clearing the Windshield of Thin Ice.....97
Defogging the Side Windows in Cold Weather.....96
General Hints.....96
Quickly Cooling the Interior.....96
Quickly Heating the Interior.....96
Recommended Settings for Cooling.....96
Recommended Settings for Heating.....96
Hints on Driving With Anti-Lock Brakes.....157
Hood Lock
See: Opening and Closing the Hood.....248
Hybrid Vehicle Operation - Mild Hybrid Electric Vehicle (MHEV).....124

Transit (TTS) Vehicles Built From: 27-01-2020 Vehicles Built Up To: 20-09-2020, CG3796en enGBR, Edition date: 201911, First-Printing

I

Ignition Switch....119
Information Displays....89
General Information....89
Installing Child Restraints....21
Attaching a Child Seat with a Support Leg....24
Attaching a Child Seat with Top Tethers....24
Booster Seats....22
Child Seats for Different Mass Groups....21
ISOFIX Anchor Points....23
Instrument Cluster....83
Instrument Lighting Dimmer....72
Instrument Panel - LHD....18
Instrument Panel - RHD....19
Intelligent Speed Limiter....189
Principle of Operation....189
Using Intelligent Speed Limiter....190
Interior Lamps - Bus....76
Courtesy Lamp Function....76
Reading Lamp Function....77
Switching All of the Interior Lamps On and Off....76
Switching the Front Courtesy Lamp On and Off....76
Switching the Front Map Reading Lamps On and Off....77
Switching the Rear Reading Lamps On and Off....77
Interior Lamps - Van....77
Courtesy Lamp Function....77
Switching the Courtesy Lamps On and Off....77
Switching the Front Map Reading Lamps On and Off....78
Interior Mirror....81
Introduction....9

J

Jump Starting the Vehicle....228
Connecting the Jumper Cables....228
Starting the Engine....230

K

Keys and Remote Controls....40

L

Lane Keeping System....193
Lane Keeping System Display....195
Lane Keeping System Messages....196
Lane Keeping System Settings....194
Lane Keeping System Warning Lamps and Indicators....196
Switching Lane Keeping System On or Off....194
Lighting Control....70
Exterior Lamps On Audible Warning....71
Flashing High Beam Headlamps....71
High Beam Headlamp Indicator....71
Lamps On Indicator....71
Lighting Control Positions....70
Switching High Beam Headlamps On and Off....71
Switching the Parking Lamps On....70
Lighting....70
General Information....70
Load Carriers
See: Roof Racks and Load Carriers - Bus....215
See: Roof Racks and Load Carriers - Van....215
Load Carrying....214
General Information....214
Load Retaining Fixtures....216
Tie Down Points....216
Locking and Unlocking....48
Autolock....50
Automatic Re-Locking....50
Autounlock....50
Configurable Unlocking....50
Door Lock Indicator....48
Double Locking the Doors....48
Locking and Unlocking the Doors From Inside....49
Opening the Double Rear Doors....49
Power Door Locks....48
Rear Emergency Exit....51
Remote Control....48

Transit (TTS) Vehicles Built From: 27-01-2020 Vehicles Built Up To: 20-09-2020, CG3796en enGBR, Edition date: 201911, First-Printing

Reprogramming the Unlocking Function....48
Slam Locking....50
Locking the Steering Wheel....65
Unlocking the Steering Wheel....65
Luggage Covers....214
Lug Nuts
See: Changing a Road Wheel....282
Lug Nuts....297
Locking Lug Nuts....297
Lug Nut Torque....297

M

Maintenance....248
General Information....248
Manual Climate Control....95
Directing Air to the Footwell Air Vents....95
Directing Air to the Instrument Panel Air Vents....95
Directing Air to the Windshield Air Vents....95
Setting the Blower Motor Speed....95
Setting the Temperature....96
Switching Maximum Cooling On and Off....95
Switching Maximum Defrost On and Off....95
Switching the Air Conditioning On and Off....95
Switching the Climate Control On and Off....95
Switching the Recirculated Air On and Off....95
Manual Seats....104
Adjusting the Armrest....105
Adjusting the Height of the Driver Seat....105
Adjusting the Lumbar Support....104
Moving the Seat Backward and Forward....104
Recline Adjustment....105
Seat Cushion Adjustment....105
Swivel Seat....105
Manual Transmission....149
Shift Indicator....149
Shifting Into Reverse....149
Message Center
See: Information Displays....89
Mirrors
See: Windows and Mirrors....79
Mobile Communications Equipment....16
MyKey Settings....43
Configurable Settings....43
Non-Configurable Settings....43
MyKey – Troubleshooting....47
What is an admin key?....47
Why can I not clear the MyKeys?....47
Why can I not create a MyKey?....47
Why can I not program a MyKey?....47
Why does the MyKey distance not accumulate?....47
MyKey™....43
Principle of Operation....43

N

Navigation....345
Changing the Format of the Map....346
Live Traffic....349
Navigation Map Updates....349
Route Guidance....347
Setting a Destination....346
Zoom....346

O

Oil Check
See: Engine Oil Check....253
Opening and Closing the Hood....248
Closing the Hood....249
Opening the Hood....248
Opening the Sliding Door....52
Opening the Sliding Door From Inside Your Vehicle....52
Opening the Sliding Door From Inside Your Vehicle in an Emergency....54
Opening the Sliding Door From Outside Your Vehicle....52
Opening the Sliding Door With the Remote Control....55
Overhead Console....115
Overhead Storage....118

Transit (TTS) Vehicles Built From: 27-01-2020 Vehicles Built Up To: 20-09-2020, CG3796en enGBR, Edition date: 201911, First-Printing

P

Parking Aids....166
Principle of Operation....166
Parking Brake Audible Warning....160
Parking Brake....160
Parking Brake – Troubleshooting....160
Parking Brake – Troubleshooting....160
Parking Brake – Information Messages....160
Parking Brake – Warning Lamps....160
Passenger Airbag....34
Passive Anti-Theft System....59
Arming the Engine Immobilizer....59
Coded Keys....59
Disarming the Engine Immobilizer....59
Principle of Operation....59
PATS
See: Passive Anti-Theft System....59
Personalized Settings....93
Chimes....94
Language....93
Measure Unit....93
Temperature Unit....93
Tire Pressure Unit....93
Phone....343
Android Auto....345
Apple CarPlay....345
Pairing Your Cell Phone for the First Time....344
Text Messaging....344
Using Your Cell Phone....344
Playing Media From a USB Device - Vehicles With: SYNC 2.5....329
Selecting the USB Device....329
Supported File Formats....329
Playing Media From a USB Device - Vehicles Without: SYNC....328
Selecting the USB Device....328
Supported Audio File Formats....328
Power Door Locks
See: Locking and Unlocking....48
Power Running Boards....62
Power Seats....106
Power Lumbar....108
Power Steering Fluid Check....256
Adding Power Steering Fluid....257
Power Windows....79
Bounce-Back....79
Opening and Closing the Windows....79
Overriding Bounce-Back....79
Resetting Bounce-Back....79
Pre-Collision Assist....208
Distance Alert....209
Distance Indication....210
Pre-Collision Assist Information Messages....211
Pre-Collision Assist System Sensors....210
Pre-Collision Assist Warning Lamp....211
Switching Active Braking On and Off....209
Programming a MyKey....44
Protecting the Environment....17
Puncture
See: Changing a Road Wheel....282

R

REACH....15
Rear Floodlamps....78
Rear Fog Lamps....74
Rear Fog Lamp Indicator....74
Switching the Rear Fog Lamps On or Off....74
Rear Overhead Storage....118
Rear Parking Aid....166
Object Distance Indicator....167
Rear Parking Aid Information Messages....168
Rear Passenger Climate Controls....97
Adjusting the Blower Motor Speed....97
Directing Air to the Footwell Air Vents....97
Directing Air to the Overhead Air Vents....97
Directing Air to the Overhead Air Vents and the Footwell Air Vents....97
Rear Quarter Windows....81
Closing the Rear Quarter Windows....82
Opening the Rear Quarter Windows....81
Rear Seats....108
Installing the Seats....110
Recline Adjustment....108
Removing the Seats - Double Cab In Van and Kombi Van....109
Removing the Seats - M2 Bus....108

Transit (TTS) Vehicles Built From: 27-01-2020 Vehicles Built Up To: 20-09-2020, CG3796en enGBR, Edition date: 201911, First-Printing

Rear View Camera.....174
Enhanced Parking Aids or Park Pilot.....177
System Settings.....176
Using the Rear View Camera.....175
Rear View Camera
See: Rear View Camera.....174
Rear Window Wiper and Washers.....69
Rear Window Washer.....69
Rear Window Wiper.....69
Rear Wiper Blades
See: Changing the Rear Wiper Blades.....261
Reduced Engine Performance.....224
Refueling.....136
System Warnings.....138
Releasing the Parking Brake.....160
Remote Control - Vehicles With: Power Sliding Door.....40
Changing the Remote Control Battery.....41
Locating Your Vehicle.....42
Remote Control Information Messages.....42
Remote Control - Vehicles Without: Power Sliding Door.....40
Reprogramming the Unlocking Function.....40
Remote Start.....101
About Remote Start.....101
Enabling Remote Start.....101
Remotely Starting the Engine.....102
Remotely Stopping the Engine.....102
Remote Start Limitations.....101
Remote Start Settings.....102
Removing a Headlamp.....262
Repairing Minor Paint Damage.....272
Replacement Parts Recommendation.....15
Collision Repairs.....15
Scheduled Maintenance and Mechanical Repairs.....15
Warranty on Replacement Parts.....15
Replacing a Lost Key or Remote Control.....42
Resetting the Power Sliding Door.....56
Restarting the Engine.....125
Restarting the Engine in Gear.....129
Restarting the Engine in Neutral.....129
Roadside Emergencies.....227
Roof Racks and Load Carriers - Bus.....215
Roof Racks and Load Carriers - Van.....215
Running-In
See: Breaking-In.....225
Running Out of Fuel.....135
Adding Fuel From a Portable Fuel Container.....136
Filling a Portable Fuel Container.....135

S

Safety Precautions.....134
Seatbelt Height Adjustment.....31
Front Seatbelt.....31
Rear Seatbelt.....31
Seatbelt Reminder.....32
Turning the Seatbelt Reminder Off.....32
Seatbelts.....30
Seats.....103
Security.....59
Selective Catalytic Reductant System.....140
AdBlue® Consumption.....143
AdBlue® Guidelines.....140
Checking the AdBlue® Level.....142
Checking the AdBlue® Level Status.....142
Filling the AdBlue® Tank.....140
Filling the AdBlue® Tank Using a Container.....142
Filling the AdBlue® Tank Using a Fuel Station Pump.....141
Selective Catalytic Reductant System Information Messages.....143
Selective Catalytic Reductant System Warning Lamp.....143
Settings.....350
Ambient Lighting.....350
Android Auto.....350
Apple CarPlay.....351
Audio.....351
Automatic Updates.....351
Bluetooth.....351
Clock.....351
Display.....351
Emergency Assistance.....351
FordPass.....351

Transit (TTS) Vehicles Built From: 27-01-2020 Vehicles Built Up To: 20-09-2020, CG3796en enGBR, Edition date: 201911, First-Printing

General....351
Mobile Apps....351
Navigation....351
Phone....351
Seats....351
Sound....351
Valet Mode....351
Vehicle....351
Voice Control....351
Wi-Fi....351
Side Airbags....35
Airbag Secondary Warning Audible Warning....36
Airbag Warning Lamp....36
Side Curtain Airbags....36
Side Sensing System....170
Object Distance Indicator....171
Sitting in the Correct Position....103
Sliding Door Precautions....52
Sliding Door....52
Closing the Sliding Door....52
Opening the Sliding Door....52
Sliding Door – Troubleshooting....57
Sliding Door – Troubleshooting....57
Sliding Door – Frequently Asked Questions....58
Sliding Door – Information Messages....57
Sliding Windows....81
Snow Chains
See: Using Snow Chains....277
Spare Wheel
See: Changing a Road Wheel....282
Special Notices....15
Speed Control
See: Cruise Control....179
Speed Limiter....189
Principle of Operation....189
Using Speed Limiter....189
Stability Control....165
Principle of Operation....165
Starter Switch
See: Ignition Switch....119
Starting a Diesel Engine - Automatic Transmission....119
Engine Warning Lamps....121
Failure to Start....120
Glow Plug Indicator....121
Guarding Against Exhaust Fumes....120
Important Ventilating Information....121
Starting the Engine....120
Stopping the Engine When Your Vehicle is Moving....120
Stopping the Engine When Your Vehicle is Stationary....120
Starting a Diesel Engine - Manual Transmission....121
Engine Warning Lamps....122
Failure to Start....122
Glow Plug Indicator....122
Guarding Against Exhaust Fumes....122
Important Ventilating Information....122
Starting the Engine....121
Stopping the Engine When Your Vehicle is Moving....122
Stopping the Engine When Your Vehicle is Stationary....122
Starting and Stopping the Engine....119
General Information....119
Steering Wheel....65
Stopping the Engine....125
Stopping the Engine in Gear....128
Stopping the Engine in Neutral....128
Stopping the Sliding Door Movement....56
Storage Compartments....115
Storing a First Aid Kit....232
Storing a Warning Triangle....232
Streaming Bluetooth Audio - Vehicles With: SYNC 2.5....328
Streaming Bluetooth Audio - Vehicles Without: SYNC....327
Selecting a Bluetooth Source....327
Supplementary Restraints System....33
Principle of Operation....33
Switching Auto-Start-Stop On and Off....125
Switching Off the Engine....123
Vehicles With a Turbocharger....123
Switching the Passenger Airbag On and Off....34
Switching the Passenger Airbag Off....34
Switching the Passenger Airbag On....35
Symbols Glossary....9
SYNC™ 3....333
General Information....333

Transit (TTS) Vehicles Built From: 27-01-2020 Vehicles Built Up To: 20-09-2020, CG3796en enGBR, Edition date: 201911, First-Printing

SYNC™ 3 Troubleshooting.....352
Additional Information and Assistance.....361
Apps.....358
Navigation.....357
Phone.....356
Resetting the System.....361
USB and Bluetooth Audio.....353
Voice Recognition.....352
Wi-Fi Connectivity.....360

T

Tailgate.....217
Lowering the Tailgate.....218
Technical Specifications
See: Capacities and Specifications.....298
Tire Care.....276
Tire Inflation When Punctured
See: Tire Sealant and Inflator Kit.....273
Tire Pressure Monitoring System.....279
How Temperature Affects the Tire Pressures.....279
Tire Pressure Monitoring System Reset Procedure.....282
Understanding the Tire Pressure Monitoring System.....280
When Changing Tires.....280
When Changing Wheels.....280
When Inflating Tires.....280
Tire Pressures - Bus.....295
Tire Pressures - Van.....290
Tire Repair Kit
See: Tire Sealant and Inflator Kit.....273
Tire Sealant and Inflator Kit.....273
After Using the Tire Sealant and Inflator Kit.....275
Using the Tire Sealant and Inflator Kit.....274
Tires
See: Wheels and Tires.....273
Tow Ball.....222
Towbar Dimensions - Bus/Kombi/Van.....302
Towbar Dimensions - Chassis Cab/Chassis Double Cab.....304
Towing a Trailer.....221
Trailer Lighting.....221
When towing a trailer:.....221
Towing Points.....230
Front Towing Point.....230
Rear Towing Point.....231
Towing Eye Location.....231
Towing the Vehicle on Four Wheels - Automatic Transmission.....222
Emergency Towing.....222
Towing the Vehicle on Four Wheels - Manual Transmission.....223
Towing.....221
Traction Control.....164
Principle of Operation.....164
Traffic Sign Recognition.....204
Principle of Operation.....204
Traffic Sign Recognition System Display.....205
Traffic Sign Recognition System Messages.....205
Using Traffic Sign Recognition.....204
Trailer Sway Control.....222
Transmission.....149
Trip Computer.....91
Average Fuel.....92
Average Speed.....92
Distance to Empty.....92
Instantaneous Fuel.....92
Personalization.....92
Resetting the Trip Computer.....91
Trip Odometer.....92
Trip Timer.....92

U

Under Hood Overview - AWD/RWD/LHD.....249
Under Hood Overview - AWD/RWD/RHD.....251
Under Hood Overview - FWD/LHD.....250
Under Hood Overview - FWD/RHD.....252
Under Seat Storage - Mild Hybrid Electric Vehicle (MHEV), Vehicles With: Passenger Double Seat/Rear Climate Control.....116
Front Passenger Seat.....116

Transit (TTS) Vehicles Built From: 27-01-2020 Vehicles Built Up To: 20-09-2020, CG3796en enGBR, Edition date: 201911, First-Printing

Under Seat Storage - Vehicles With: Passenger Double Seat, Vehicles Without: Rear Climate Control, Excluding: Mild Hybrid Electric Vehicle (MHEV)....116
Front Passenger Seat....116
Unique Driving Characteristics....124
USB Port....329
Using Adaptive Cruise Control....180
Adaptive Cruise Control Indicator....186
Adaptive Cruise Control Information Messages....186
Adaptive Cruise Control System Sensors....184
Adaptive Cruise Control With Speed Sign Recognition....187
Adaptive Cruise Control With Speed Sign Recognition Information Messages....188
Automatic Cancellation....183
Canceling the Set Speed....183
Changing the Set Speed....182
Detection Issues....183
Following a Vehicle....181
Hilly Condition Usage....183
Overriding the System....182
Resuming the Set Speed....183
Setting the Adaptive Cruise Speed....181
Setting the Gap Distance....182
Switching Adaptive Cruise Control Off....183
Switching Adaptive Cruise Control On....180
Switching Between the Cruise Control Modes....187
Switching to Normal Cruise Control....185
System Not Available....184
Using All-Wheel Drive....156
All-Wheel Drive Automatic Mode....156
All-Wheel Drive Information Messages....156
All-Wheel Drive Lock Mode....156
Using Cruise Control....179
Canceling the Set Speed....179
Changing the Set Speed....179
Cruise Control Indicator....180
Resuming the Set Speed....179
Setting the Cruise Speed....179
Switching Cruise Control Off....179
Switching Cruise Control On....179
Using MyKey With Remote Start Systems....47
Using Power Running Boards....62
Automatic Power Deploy....62
Automatic Power Stow....62
Bounce-back....63
Enabling and Disabling....63
Manual Operation - Excluding: Turkey....63
Manual Operation - Turkey....64
Manual Power Deploy....63
Resetting the System....64
Using Snow Chains....277
Using Stability Control....165
Using Summer Tires....276
Using Traction Control....164
Switching the System Off or On....164
System Indicator Lights and Messages....164
Using Voice Recognition....332
Apps....340
Automatic Blower Motor Speed Reduction....341
Entertainment....336
General....335
Navigation....339
Phone....338
Phone Voice Service....332
Voice Settings....340
Using Winter Tires....276

V

Vehicle Care....269
Vehicle Dimensions - Bus/Kombi/Van....298
Long Wheelbase....298
Long Wheelbase With an Extended Frame....298
Medium Wheelbase....298
Vehicle Dimensions - Chassis Cab/Chassis Double Cab....299
Extra Long Wheelbase Double Chassis Cab With an Extended Frame....301
Extra Long Wheelbase Single Chassis Cab With an Extended Frame....301
Long Wheelbase....300

Transit (TTS) Vehicles Built From: 27-01-2020 Vehicles Built Up To: 20-09-2020, CG3796en enGBR, Edition date: 201911, First-Printing

Long Wheelbase Double Chassis Cab....300
Long Wheelbase Single Chassis Cab With an Extended Frame....300
Medium Wheelbase....299
Short Wheelbase....299
Vehicle Identification Number....307
Vehicle Identification Plate....306
Ventilation
See: Climate Control....95
VIN
See: Vehicle Identification Number....307

W

Warning Lamps and Indicators....84
Washer Fluid Check....261
Washers
See: Cleaning the Exterior....269
See: Wipers and Washers....66
What Is Auto-Start-Stop....125
Wheel Nuts
See: Changing a Road Wheel....282
Wheels and Tires....273
General Information....273
Wi-Fi Hotspot....319
Windows and Mirrors....79
Windshield Washers....68
Settings....68
Windshield Wipers....66
Intermittent Wipe....66
Winter Tires
See: Using Winter Tires....276
Wiper Blades
See: Checking the Wiper Blades....261
Wipers and Washers....66
Wrong Way Alert....206
Switching Wrong Way Alert On or Off....206
Wrong Way Alert Information Messages....207

Transit (TTS) Vehicles Built From: 27-01-2020 Vehicles Built Up To: 20-09-2020, CG3796en enGBR, Edition date: 201911, First-Printing

CG3796en, Edition date: 201911