FORD **RANGER** Owner's Manual

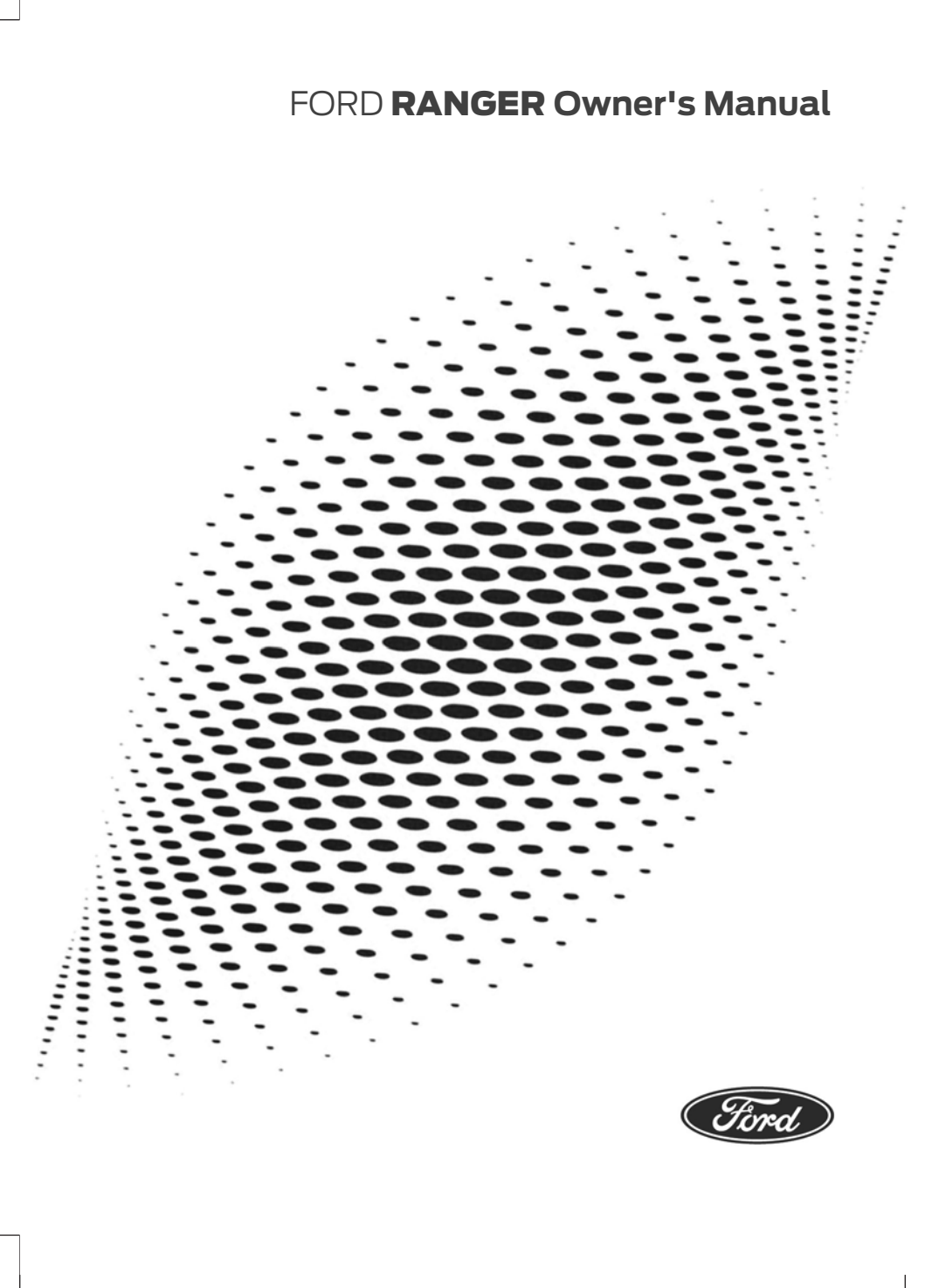

The information contained in this publication was correct at the time of release. In the interest of continuous development, we reserve the right to change specifications, design or equipment at any time without notice or obligation. No part of this publication may be reproduced, transmitted, stored in a retrieval system or translated into any language in any form by any means without our written permission. Errors and omissions excepted.

© Ford Motor Company 2024

All rights reserved.

Part Number: CG4010en-202407-20240715183502

Table of Contents

About Us - Raptor

SVT 19
Team RS 19
Ford Performance 19

Introduction

About This Publication 20
Using This Publication 21
Special Notices - Turkey 21

Symbols Glossary

Symbols Used On Your Instrument Cluster 23

Data Privacy

Data Privacy 27
Service Data 28
Event Data 28
Settings Data 29
Connected Vehicle Data 29
Mobile Device Data 29
Emergency Call System Data - Vehicles With: eCall 30

Environment

Protecting the Environment 31

Visual Search

Steering Wheel - Excluding: Raptor 32
Steering Wheel - Raptor 33
Instrument Panel - LHD, Excluding: Raptor 34
Instrument Panel - RHD, Excluding: Raptor 35
Instrument Panel - Raptor, LHD 36
Instrument Panel - Raptor, RHD 37
Vehicle Interior - LHD, Excluding: Raptor 38
Vehicle Interior - RHD, Excluding: Raptor 39
Vehicle Interior - Raptor, LHD 40
Vehicle Interior - Raptor, RHD 41
Front Exterior - Excluding: Raptor 42
Front Exterior - Raptor 43
Rear Exterior - Excluding: Raptor 44
Rear Exterior - Raptor 45

Unique Features - Raptor

Unique Features 46

Child Safety

Child Safety Precautions 47
Child Restraint Anchor Points 48
Child Restraints 49
Installing Child Restraints 51
Booster Seats 58
Child Safety Locks - Vehicles With: Mechanical Child Proof Locks 58
Child Safety Locks - Vehicles With: Remote Child Proof Locks 59

Seatbelts

Seatbelt Precautions 60
Fastening and Unfastening the Seatbelts 60
Adjusting the Seatbelts During Pregnancy 60
Seatbelt Reminder 61
Checking the Seatbelts 61

Airbags

How Do the Front Airbags Work 63
How Do the Side Airbags Work 63
How Do the Knee Airbags Work 64
How Do the Side Curtain Airbags Work 64
Airbag Precautions 65
Front Passenger Sensing System 65

eCall

What Is eCall 69

Ranger (TRA, TRB) Vehicles Built From: 01-11-2024, CG4010en enGBR, Edition date: 202407, DOM

Table of Contents

How Does eCall Work 69
Emergency Call Requirements 69
Emergency Call Limitations 69
Manually Making an Emergency Call 69
Emergency Call Indicators 70
Changing the Backup Battery 71
eCall – Troubleshooting 71

Keys and Remote Controls

Remote Control Limitations 72
Using the Remote Control 72
Opening and Closing the Flip Key - Vehicles With: Remote Flip Key 72
Removing the Key Blade - Vehicles With: Push Button Start 73
Sounding the Panic Alarm 73
Locating Your Vehicle 73
Changing the Remote Control Battery - Vehicles With: Push Button Start 73
Changing the Remote Control Battery - Vehicles With: Flip Key 75
Replacing a Lost Key or Remote Control 76
Programming the Remote Control - Vehicles With: Push Button Start 77
Programming the Remote Control - Vehicles With: Flip Key 77
Using the Valet Mode 78
Keys and Remote Controls – Troubleshooting 79

Doors and Locks

Operating the Doors From Outside Your Vehicle 80
Operating the Doors From Inside Your Vehicle 81
Autounlock 81
Mislock 81
Autorelock 81
Door Lock Indicators 82
Doors and Locks Audible Warnings 82
Doors and Locks – Troubleshooting 82

Keyless Entry

What Is Keyless Entry 84
Keyless Entry Limitations 84
Keyless Entry Settings 84
Using Keyless Entry 84
Keyless Entry – Troubleshooting 85

Easy Entry and Exit

How Does Easy Entry and Exit Work 86
Switching Easy Entry and Exit On and Off 86

Tailgate

Tailgate Precautions 87
Opening the Tailgate 87
Locking and Unlocking the Tailgate 87
Tailgate Work Surface 87

Security

Passive Anti-Theft System 89
Anti-Theft Alarm System 89
Anti-Theft Alarm System Settings 90
Security – Troubleshooting 91

Steering Wheel

Adjusting the Steering Wheel 93
Locking the Steering Wheel - Vehicles Without: Push Button Start 93
Locking the Steering Wheel - Vehicles With: Push Button Start 93
Horn 93
Switching the Heated Steering Wheel On and Off - Vehicles With: Heated Steering Wheel 94

Wipers and Washers

Wipers 95

Ranger (TRA, TRB) Vehicles Built From: 01-11-2024, CG4010en enGBR, Edition date: 202407, DOM

Autowipers 95
Checking the Wiper Blades 96
Replacing the Front Wiper Blades 96
Washers 97
Wipers and Washers – Troubleshooting 98

Exterior Lighting

Exterior Lighting Control 99
Headlamps 99
Headlamps – Troubleshooting 100
Autolamps 101
Exterior Lamps 101
Exterior Zone Lighting 103
Automatic High Beam Control 104
Automatic High Beam Control – Troubleshooting 106
Glare Free Lighting 106
Glare Free Lighting – Troubleshooting 108
Adaptive Front Lighting 109

Interior Lighting

Switching All of the Interior Lamps On and Off 111
Switching the Front Interior Lamps On and Off 111
Switching the Rear Interior Lamps On and Off 111
Interior Lamp Function 111
Adjusting the Instrument Panel Lighting Brightness 112
Ambient Lighting 112
Interior Lighting – Troubleshooting 112

Windows

Opening and Closing the Windows 113
Global Opening and Closing 113
Window Bounce-Back 114
Locking the Rear Window Controls 115

Interior Mirror

Interior Mirror Precautions 116
Manually Dimming the Interior Mirror 116
Auto-Dimming Interior Mirror 116

Exterior Mirrors

Adjusting the Exterior Mirrors 117
Folding the Exterior Mirrors - Vehicles With: Manual Folding Mirrors 117
Folding the Exterior Mirrors - Vehicles With: Power Folding Mirrors 117

Instrument Cluster

Instrument Cluster Overview - Plug-In Hybrid Electric Vehicle (PHEV) 119
Instrument Cluster Overview - Vehicles With: 8 Inch Screen 119
Instrument Cluster Overview - Vehicles With: 12 Inch Screen 120
Tachometer 121
Speedometer 121
Fuel Gauge 122
Vehicle Range Display - Plug-In Hybrid Electric Vehicle (PHEV) 122
High Voltage Battery Gauge - Plug-In Hybrid Electric Vehicle (PHEV) 123
High Voltage Battery Temperature Gauge - Plug-In Hybrid Electric Vehicle (PHEV) 123
Engine Coolant Temperature Gauge 123
Engine Oil Pressure Gauge - Vehicles With: 8 Inch Screen 123
Engine Oil Pressure Gauge - Vehicles With: 12 Inch Screen 123
Transmission Fluid Temperature Gauge - Vehicles With: 8 Inch Screen 123
Transmission Fluid Temperature Gauge - Vehicles With: 12 Inch Screen 124
AdBlue® Gauge - Diesel, Vehicles With: 8 Inch Screen 124

Ranger (TRA, TRB) Vehicles Built From: 01-11-2024, CG4010en enGBR, Edition date: 202407, DOM

AdBlue® Gauge - Diesel, Vehicles With: 12 Inch Screen 124

Instrument Cluster Display

Using the Instrument Cluster Display Controls - Vehicles With: 8 Inch Screen 125
Using the Instrument Cluster Display Controls - Vehicles With: 12 Inch Screen 125
Instrument Cluster Display Main Menu - Plug-In Hybrid Electric Vehicle (PHEV) 126
Instrument Cluster Display Main Menu - Vehicles With: 8 Inch Screen 128
Instrument Cluster Display Main Menu - Vehicles With: 12 Inch Screen, Excluding: Raptor 130
Instrument Cluster Display Main Menu - Raptor 132
Customizing the Instrument Cluster Display - Vehicles With: 8 Inch Screen 134
Customizing the Instrument Cluster Display - Vehicles With: 12 Inch Screen 134
Fuel Economy Display - Plug-In Hybrid Electric Vehicle (PHEV) 134
EV Coach - Plug-In Hybrid Electric Vehicle (PHEV) 134
Electric Economy - Plug-In Hybrid Electric Vehicle (PHEV) 135
Brake Coach - Plug-In Hybrid Electric Vehicle (PHEV) 135
Trip Summary - Plug-In Hybrid Electric Vehicle (PHEV) 136
Vehicle Charging Status - Plug-In Hybrid Electric Vehicle (PHEV) 136

Trip Computer

Accessing the Trip Computer 137
Resetting the Trip Computer 137
Resetting the Individual Trip Values - Vehicles With: 8 Inch Screen 137
Configuring the Trip Computer - Vehicles With: 8 Inch Screen 137

Remote Start

What Is Remote Start 138
Remote Start Precautions 138
Remote Start Limitations 138
Enabling Remote Start 138
Remotely Starting and Stopping the Vehicle 138
Extending the Remote Start Duration 139
Remote Start Settings 139

Climate Control - Vehicles With: Automatic Temperature Control

Identifying the Climate Control Unit 140
Switching Climate Control On and Off 140
Switching Recirculated Air On and Off 140
Switching Air Conditioning On and Off 140
Switching Maximum Defrost On and Off 140
Switching Maximum Cooling On and Off 140
Switching the Heated Windshield On and Off 141
Switching the Heated Rear Window On and Off 141
Setting the Blower Motor Speed 141
Switching the Heated Mirrors On and Off 141
Setting the Temperature 141
Directing the Flow of Air 142
Auto Mode 142
Climate Control Hints 143
Climate Control – Warning Lamps 144

Climate Control - Vehicles With: Manual Temperature Control

Identifying the Climate Control Unit 145
Switching Climate Control On and Off 145
Switching Recirculated Air On and Off 145
Switching Air Conditioning On and Off 145
Switching Maximum Defrost On and Off 145
Switching Maximum Cooling On and Off 145
Switching the Heated Windshield On and Off 146
Switching the Heated Rear Window On and Off 146
Setting the Blower Motor Speed 146
Switching the Heated Mirrors On and Off 146
Setting the Temperature - Vehicles Without: Heater 146
Setting the Temperature - Vehicles With: Heater 147
Directing the Flow of Air 147
Climate Control Hints 147

Auxiliary Heater

What Is the Auxiliary Heater 149
Auxiliary Heater Precautions 149
Auxiliary Heater Limitations 149
Switching the Auxiliary Heater On and Off 149

Parking Heater

What Is the Parking Heater 150
Parking Heater Precautions 150
Parking Heater Limitations 150
Parking Heater Settings 150
Switching the Parking Heater On and Off With the Remote Control 151
Parking Heater Remote Control Indicators 152
Changing the Parking Heater Remote Control Battery 152
Parking Heater – Troubleshooting 153

Interior Air Quality

What Is the Cabin Air Filter 154
Replacing the Cabin Air Filter 154

Front Seats

Front Seat Precautions 155
Sitting in the Correct Position 155
Manual Seats 156
Power Seats 158
Heated Seats 160
Ventilated Seats 161

Rear Seats

Manual Seats 162

Rear Occupant Alert System

What is the Rear Occupant Alert System 165
How Does the Rear Occupant Alert System Work 165
Rear Occupant Alert System Precautions 165
Rear Occupant Alert System Limitations 165
Rear Occupant Alert System Settings 166
Rear Occupant Alert System Indicators 166
Rear Occupant Alert System Audible Warnings 167

Memory Function

What Is the Memory Function 168
Memory Function Precautions 168

Ranger (TRA, TRB) Vehicles Built From: 01-11-2024, CG4010en enGBR, Edition date: 202407, DOM

Locating the Memory Function Buttons 168
Saving a Preset Position 168
Recalling a Preset Position 168

USB Ports

Locating the USB Ports 169
Playing Media Using the USB Port 169
Charging a Device 170

Power Outlet - Vehicles With: 120V Power Outlet/230V Power Outlet

What Is the Power Outlet 171
Power Outlet Precautions 171
Power Outlet Limitations 171
Locating the Power Outlets 171
Power Outlet Indicators 172

Power Outlet - Vehicles With: 12V Power Outlet

What Is the Power Outlet 174
Power Outlet Precautions 174
Locating the Power Outlets 174

Onboard Generator - Vehicles With: 220-240V 2.3kW Power Outlet/220-240V 6.9kW Power Outlet

What Is the Onboard Generator 175
Onboard Generator Precautions 175
Locating the Outlets 176
Onboard Generator Indicators 177
Switching the Outlets On and Off 177
What Is Utility Idle Mode - Vehicles With: Flip Key 178
Switching Utility Idle Mode On and Off - Vehicles With: Flip Key 178
What Is Generator Mode 178
Switching Generator Mode On and Off 178
Resetting Ground Fault Detection 179
Resetting the Circuit Breaker - Vehicles With: 220-240V 6.9kW Power Outlet 179
Onboard Generator – Troubleshooting 180

Wireless Accessory Charger

What Is the Wireless Accessory Charger 183
Wireless Accessory Charger Precautions 183
Locating the Wireless Accessory Charger 183
Charging a Wireless Device 183

Storage

Cup Holders 185
Glove Compartment 185
Center Console 186
Under Seat Storage 186
Glasses Holder 186

Starting and Stopping the Engine

Starting and Stopping the Engine – Precautions 187
Ignition Switch 187
Push Button Ignition Switch 188
Starting the Engine 188
Stopping the Engine 190
Automatic Engine Stop 192
Accessing the Passive Key Backup Position 193
Starting and Stopping the Engine – Troubleshooting 193

Plug-In Hybrid Electric Vehicle Information

Plug-In Hybrid Electric Vehicle Information 198
Low Engine Use Mode 200

Ranger (TRA, TRB) Vehicles Built From: 01-11-2024, CG4010en enGBR, Edition date: 202407, DOM

Auto-Start-Stop

What Is Auto-Start-Stop 201
Auto-Start-Stop Precautions - Manual Transmission 201
Auto-Start-Stop Precautions - Automatic Transmission 201
Switching Auto-Start-Stop On and Off 201
Stopping the Engine - Manual Transmission 201
Stopping the Engine - Automatic Transmission 202
Restarting the Engine - Manual Transmission 202
Restarting the Engine - Automatic Transmission 202
Auto-Start-Stop Indicators 202
Auto-Start-Stop – Troubleshooting 203

Fuel and Refueling

Fuel and Refueling Precautions 205
Fuel Quality 205
Locating the Fuel Filler Funnel 206
Running Out of Fuel 207
Refueling 208
Fuel Tank Capacity 213
Fuel Consumption Regulations 213
Fuel Consumption Figures - 2.0L Diesel 213
Fuel Consumption Figures - 2.3L, Plug-In Hybrid Electric Vehicle (PHEV) 214
Fuel Consumption Figures - 3.0L EcoBoost™ 215
Fuel Consumption Figures - 3.0L Diesel 216
Fuel and Refueling – Troubleshooting 216

Diesel Particulate Filter - Diesel

What Is the Diesel Particulate Filter 217
How Does the Diesel Particulate Filter Work 217
Diesel Particulate Filter Precautions 217
Diesel Particulate Filter Requirements 218
Diesel Particulate Filter Manual Regeneration 218
Diesel Particulate Filter – Troubleshooting 220

Selective Catalytic Reduction System - Diesel

What Is the Selective Catalytic Reduction System 222
How Does the Selective Catalytic Reduction System Work 222
Selective Catalytic Reduction System Precautions 222
Selective Catalytic Reduction System Requirements 222
Selective Catalytic Reduction System Guidelines 222
Filling the Selective Catalytic Reduction System Tank 223
Checking the Selective Catalytic Reduction System Status 226
Selective Catalytic Reduction Fluid Consumption 226
AdBlue® Capacity and Specification 226
Selective Catalytic Reduction System – Troubleshooting 226

Catalytic Converter

What Is the Catalytic Converter 228
Catalytic Converter Precautions 228
Catalytic Converter – Troubleshooting 228

Gasoline Particulate Filter - Gasoline

What Is the Gasoline Particulate Filter 229

How Does the Gasoline Particulate Filter Work 229
Gasoline Particulate Filter Precautions 229
Gasoline Particulate Filter Requirements 229
Gasoline Particulate Filter – Troubleshooting 230

High Voltage Battery - Plug-In Hybrid Electric Vehicle (PHEV)

What Is the High Voltage Battery 231
High Voltage Battery Precautions 231
Recycling and Disposing of the High Voltage Battery 231
High Voltage Battery – Troubleshooting 231

Charging Your Vehicle

Charging Equipment Precautions 232
Charging Equipment Overview 233
Charging Equipment Indicators 234
Locating the Charge Port 236
Charge Port Indicators 236
AC Charging 237
Charge Coupler Manual Release 240
Charging Settings 241
Using Your Vehicle App and Charging 245
Charging Equipment Identification Symbols 246
Charging Your Vehicle – Troubleshooting 247

Manual Transmission

Manual Transmission Precautions 249
Shifting Into Reverse 249
Manual Transmission Shift Indicators 249
Checking the Manual Transmission Fluid Level 250
Checking the Clutch Fluid Level 250
Manual Transmission Fluid Capacity and Specification 250
Clutch Fluid Capacity and Specification 250

Automatic Transmission

Automatic Transmission Positions 251
Manually Shifting Gears - Excluding: Raptor 253
Manually Shifting Gears - Raptor 254
Temporary Neutral Mode 254
Automatic Return to Park (P) 255
Shifting Your Immobile Vehicle Out of Park (P) 256
Automatic Transmission Audible Warnings - Vehicles With: Electronic Shift 257
Automatic Transmission Audible Warnings - Vehicles With: Mechanical Shift 257
Using Progressive Range Selection 257

Four-Wheel Drive

How Does Four-Wheel Drive Work - 4x4 with Part Time Engagement 258
How Does Four-Wheel Drive Work - Advanced 4x4 with 4A Mode 258
Four-Wheel Drive Limitations - Excluding: Raptor 258
Four-Wheel Drive Limitations - Raptor 260
Switching Four-Wheel Drive On and Off 261
Selecting a Four-Wheel Drive Mode - 4x4 with Part Time Engagement 261
Selecting a Four-Wheel Drive Mode - Advanced 4x4 with 4A Mode 262
Four-Wheel Drive Modes 263
Four-Wheel Drive Indicators 264
Transfer Case Fluid Capacity and Specification 264
Four-Wheel Drive – Troubleshooting 264

Electronic Locking Differential

What Is the Electronic Locking Differential - Excluding: Raptor 267
What Is the Electronic Locking Differential - Raptor 267
Switching the Electronic Locking Differential On and Off - Excluding: Raptor 268
Switching the Electronic Locking Differential On and Off - Raptor 269
Electronic Locking Differential Indicators - Excluding: Raptor 270
Electronic Locking Differential Indicators - Raptor 270
Electronic Locking Differential – Troubleshooting 271

Brakes

Brake Precautions 274
Anti-Lock Braking System 274
Brake Over Accelerator 274
Locating the Brake Fluid Reservoir 274
Checking the Brake Fluid 274
Brake Fluid Specification 275
Brakes – Troubleshooting 275

Parking Brake

Applying the Parking Brake - Manual Transmission 278
Applying the Parking Brake - Automatic Transmission 278
Releasing the Parking Brake 278
Parking Brake Audible Warning 278
Parking Brake – Troubleshooting 278

Electric Parking Brake

What Is the Electric Parking Brake 280
Applying the Electric Parking Brake - Manual Transmission 280
Applying the Electric Parking Brake - Automatic Transmission 280
Applying the Electric Parking Brake in an Emergency 281
Manually Releasing the Electric Parking Brake 281
Automatically Releasing the Electric Parking Brake 281
Electric Parking Brake Audible Warning 281
Releasing the Electric Parking Brake if the Vehicle Battery Has Run Out of Charge 281
Electric Parking Brake – Troubleshooting 282

Reverse Brake Assist

What Is Reverse Brake Assist 284
How Does Reverse Brake Assist Work 284
Reverse Brake Assist Precautions 284
Switching Reverse Brake Assist On and Off 285
Overriding Reverse Brake Assist 285
Reverse Brake Assist Indicators 285
Reverse Brake Assist – Troubleshooting 286

Hill Start Assist

What Is Hill Start Assist 288
How Does Hill Start Assist Work 288
Hill Start Assist Precautions 288
Switching Hill Start Assist On and Off - Automatic Transmission 288
Switching Hill Start Assist On and Off - Manual Transmission 288
Hill Start Assist – Troubleshooting 288

Auto Hold

How Does Auto Hold Work 289
Switching Auto Hold On and Off 289
Using Auto Hold 289
Auto Hold Indicators 289

Ranger (TRA, TRB) Vehicles Built From: 01-11-2024, CG4010en enGBR, Edition date: 202407, DOM

Traction Control

What Is Traction Control 291
How Does Traction Control Work 291
Switching Traction Control On and Off 291
Traction Control Indicator 291
Traction Control – Troubleshooting 292

Stability Control

How Does Stability Control Work 293
Switching Stability Control On and Off 294
Stability Control Indicator 295
Stability Control – Troubleshooting 296

Trail Control

What Is Trail Control 297
Trail Control Limitations 297
Switching Trail Control On and Off 297
Setting the Trail Control Speed 297
Canceling the Set Speed 297
Trail Control Indicators 298
Trail Control – Troubleshooting 299

Trail Turn Assist

What Is Trail Turn Assist 300
Trail Turn Assist Precautions 300
Trail Turn Assist Limitations 300
Switching Trail Turn Assist On and Off 300
Trail Turn Assist Indicators 300
Trail Turn Assist – Troubleshooting 301

Hill Descent Control

What Is Hill Descent Control 302
How Does Hill Descent Control Work 302
Hill Descent Control Precautions 302
Switching Hill Descent Control On and Off 302
Setting the Hill Descent Speed 302
Hill Descent Control Indicator 303
Hill Descent Control – Troubleshooting 303

Steering

Electric Power Steering 304
Steering – Troubleshooting 304

Parking Aids

Parking Aid Precautions 307
Switching Parking Aid On and Off 307
Rear Parking Aid 308
Front Parking Aid 308
Parking Aid Indicators 310
Parking Aids – Troubleshooting 311

Rear View Camera

What Is the Rear View Camera - Vehicles With: Digital Rear View Camera 312
What Is the Rear View Camera - Vehicles With: Analog Rear View Camera 312
Rear View Camera Precautions 312
Locating the Rear View Camera 312
Rear View Camera Guide Lines 313
Rear View Camera Settings 313

360 Degree Camera

What Is the 360 Degree Camera 315
How Does the 360 Degree Camera Work 315
360 Degree Camera Precautions 315
Locating the 360 Degree Cameras 315
360 Degree Camera Guide Lines 316
360 Degree Camera Settings 317

Cruise Control

What Is Cruise Control 319
Switching Cruise Control On and Off 319

Ranger (TRA, TRB) Vehicles Built From: 01-11-2024, CG4010en enGBR, Edition date: 202407, DOM

Setting the Cruise Control Speed 319
Canceling the Set Speed 320
Resuming the Set Speed 320
Cruise Control Indicators 320

Adaptive Cruise Control

How Does Adaptive Cruise Control Work 321
How Does Adaptive Cruise Control With Stop and Go Work 321
Adaptive Cruise Control Precautions 321
Adaptive Cruise Control Limitations 322
Switching Adaptive Cruise Control On and Off 324
Adaptive Cruise Control Automatic Cancellation 324
Setting the Adaptive Cruise Control Speed 324
Setting the Adaptive Cruise Control Gap 325
Canceling the Set Speed 326
Resuming the Set Speed 326
Overriding the Set Speed 327
Adaptive Cruise Control Indicators 328
Switching From Adaptive Cruise Control to Cruise Control 328
Lane Centering 328
Lane Centering – Troubleshooting 331
Intelligent Adaptive Cruise Control 332
Intelligent Adaptive Cruise Control – Troubleshooting 333
Adaptive Cruise Control – Troubleshooting 333

Drive Mode Control - Plug-In Hybrid Electric Vehicle (PHEV)

What Is Drive Mode Control 335
Selecting a Drive Mode 335
Plug-In Hybrid Electric Vehicle Drive Modes 336
Plug-In Hybrid Electric Vehicle Drive Modes – Troubleshooting 337

Drive Mode Control - Excluding: Raptor

What Is Drive Mode Control 338
How Does Drive Mode Control Work 338
Selecting a Drive Mode - Vehicles With: Push Button Selectable Drive Modes 338
Selecting a Drive Mode - Vehicles With: Rotary Selectable Drive Modes 339
Drive Modes 339
Drive Mode Control – Troubleshooting 341

Drive Mode Control - Raptor

What Is Drive Mode Control 343
How Does Drive Mode Control Work 343
Selecting a Drive Mode 343
Drive Modes 345
Drive Mode Control – Troubleshooting 347

Eco Coach

What Is Eco Coach 349
How Does Eco Coach Work 349
How Does Instantaneous Efficiency Level Work 349
Viewing the Instantaneous Efficiency Level 349
How Does Trip Summary Work 349
Viewing the Trip Summary 349

Local Hazard Information

What Is Local Hazard Information 350
Local Hazard Information Precautions 350

Local Hazard Information Indicators 350
Enabling Local Hazard Information 350
Checking Local Hazard Information Status 350

Speed Limiter

How Does the Speed Limiter Work 351
Speed Limiter Precautions 351
Switching the Speed Limiter On and Off 351
Setting the Speed Limit 351
Changing the Set Speed Limit 351
Canceling the Set Speed Limit 351
Resuming the Set Speed Limit 351
Intentionally Exceeding the Set Speed Limit 352
Speed Limiter Indicators 352
Speed Limiter Audible Warnings 352

Intelligent Speed Limiter

What Is the Intelligent Speed Limiter 353
How Does the Intelligent Speed Limiter Work 353
Intelligent Speed Limiter Precautions 353
Switching the Intelligent Speed Limiter On and Off 353
Setting the Speed Limit 353
Changing the Set Speed Limit 353
Canceling the Set Speed Limit 354
Resuming the Set Speed Limit 354
Intentionally Exceeding the Set Speed Limit 354
Intelligent Speed Limiter Indicators 354
Intelligent Speed Limiter Audible Warnings 354
Switching From Intelligent Speed Limiter to Speed Limiter 354
Intelligent Speed Limiter – Troubleshooting 355

Lane Keeping System

What Is the Lane Keeping System 356
How Does the Lane Keeping System Work 356
Lane Keeping System Precautions 356
Lane Keeping System Limitations 356
Switching the Lane Keeping System On and Off 357
Switching the Lane Keeping System Mode 357
Lane Keeping System Settings 357
Aid Mode 358
Alert and Aid Mode 358
Lane Keeping System Indicators 358
Blind Spot Assist 359
Blind Spot Assist with Trailer Coverage 361
Lane Keeping System – Troubleshooting 364

Blind Spot Information System

What Is Blind Spot Information System 367
How Does Blind Spot Information System Work 367
Blind Spot Information System Precautions 367
Blind Spot Information System Limitations 367
Blind Spot Information System Requirements 367
Switching Blind Spot Information System On and Off 368
Locating the Blind Spot Information System Sensors 368
Blind Spot Information System With Trailer Coverage 369
Blind Spot Information System Indicators 370
Blind Spot Information System – Troubleshooting 371

Cross Traffic Alert

What Is Cross Traffic Alert 373
How Does Cross Traffic Alert Work 373
Cross Traffic Alert Precautions 373
Cross Traffic Alert Limitations 373
Switching Cross Traffic Alert On and Off 374
Locating the Cross Traffic Alert Sensors 374
Cross Traffic Alert Indicators 374
Cross Traffic Alert – Troubleshooting 375

Pre-Collision Assist

What Is Pre-Collision Assist 376
How Does Pre-Collision Assist Work 376
Pre-Collision Assist Precautions 376
Pre-Collision Assist Limitations 377
Switching Pre-Collision Assist On and Off 378
Locating the Pre-Collision Assist Sensors 379
Distance Indication 379
Distance Alert 380
Automatic Emergency Braking 380
Evasive Steering Assist 381
Pre-Collision Assist – Troubleshooting 381

Driver Alert

What Is Driver Alert 385
How Does Driver Alert Work 385
Driver Alert Precautions 385
Driver Alert Limitations 385
Switching Driver Alert On and Off 386
Driver Alert Indicators 386
Driver Alert – Troubleshooting 386

Traffic Sign Recognition

What Is Traffic Sign Recognition 387
How Does Traffic Sign Recognition Work 387
Traffic Sign Recognition Precautions 387
Traffic Sign Recognition Limitations 387
Traffic Sign Recognition Indicators 388
Traffic Sign Recognition Settings 388
Traffic Sign Recognition – Troubleshooting 389

Wrong Way Alert

What Is Wrong Way Alert 390
How Does Wrong Way Alert Work 390
Wrong Way Alert Precautions 390
Wrong Way Alert Limitations 390
Switching Wrong Way Alert On and Off 390
Wrong Way Alert – Troubleshooting 391

Load Carrying

Load Carrying Precautions 392
Load Retaining Fixtures and Capacities 393
Roof Rack 395

Pickup Bed

Pickup Bed Precautions 401
Pickup Bed Anchor Points 401
Pickup Bed Slots 403
Pickup Bed Access Caps 403
Roller Shutter 403

Connecting a Trailer

Connecting a Trailer Precautions 407
Tow Ball 407
Connecting a Trailer 408
Trailer Lighting Check 409
Connecting a Trailer – Troubleshooting 410

Ranger (TRA, TRB) Vehicles Built From: 01-11-2024, CG4010en enGBR, Edition date: 202407, DOM

Towing a Trailer

Towing a Trailer Precautions 411
Trailer Brake Precautions 412
Towing a Trailer Limitations 412
Launching or Retrieving a Boat or Personal Watercraft 412
Towing Weights and Dimensions 413
Towing a Trailer – Troubleshooting 417

Trailer Sway Control

How Does Trailer Sway Control Work 418
Trailer Sway Control Precautions 418
Switching Trailer Sway Control On and Off 418

Trailer Backup Assistance

What is Trailer Backup Assistance 419
How Does Trailer Backup Assistance Work 419
Trailer Backup Assistance Precautions 419
Setting Up the Trailer Backup Assistance for a Conventional Trailer 419
Switching Trailer Backup Assistance On and Off 422
Using the Trailer Backup Assistance Controller 423
Using the Trailer Backup Assistance Views 423
Trailer Backup Assistance – Troubleshooting 425

Trailer Reverse Guidance

What Is Trailer Reverse Guidance 430
How Does Trailer Reverse Guidance Work 430
Trailer Reverse Guidance Precautions 430
Setting Up Trailer Reverse Guidance for a Conventional Trailer 430
Switching Trailer Reverse Guidance On and Off 433
Using Trailer Reverse Guidance Views 433
Trailer Reverse Guidance – Troubleshooting 435

Off-Road Driving

Basic Off-Road Driving Techniques 439
Driving Your Vehicle at High Speeds - Raptor 440
Driving Through Water Limitations 440
Water Wading - Excluding: Raptor 441
Water Wading - Raptor 442
Off-Road Driving Aids - Raptor 442
After Driving Your Vehicle Off-Road 443
Off-Road Screen 444

Driving Hints

Breaking-In 448
Driving Economically 448
Driving in Cold Weather 448
Floor Mats 449

Crash and Breakdown Information

High Voltage Battery Vehicle Precautions - Plug-In Hybrid Electric Vehicle (PHEV) 450
Switching the Hazard Flashers On and Off 451
Jump Starting the Vehicle 451
Post-Crash Alert System 453
Post Impact Braking 453
Automatic Crash Shutoff 454
Recovery Towing 454
Transporting the Vehicle 456
Fail-Safe Cooling 457

Towing Your Vehicle

Towing Your Vehicle Precautions 459

Emergency Towing - Automatic Transmission 459
Emergency Towing - Manual Transmission 459

Emergency Equipment

Storing a First Aid Kit 460
Storing a Fire Extinguisher 460
Storing a Warning Triangle 460

Fuses

Fuse Precautions 461
Under Hood Fuse Box 461
Battery Fuse Box 471
Body Control Module Fuse Box 472
Identifying Fuse Types 475
Fuses – Troubleshooting 475

Vehicle Inspection Guide

Brake System Inspection 476

Maintenance

Maintenance Precautions 477
Opening and Closing the Hood 477
Under Hood Overview - 2.0L Diesel 479
Under Hood Overview - 2.3L, Hybrid Electric Vehicle (HEV) 480
Under Hood Overview - 3.0L EcoBoost™ 481
Under Hood Overview - 3.0L Diesel 482
Engine Oil 483
Checking the Coolant 485
Engine Air Filter 489
Draining the Fuel Filter Water Trap - Diesel 491
Changing the Fuel Filter - Diesel 492
Changing the Fuel Filter - Gasoline 492
Drive Belt Routing Overview - 2.0L Diesel 492
Drive Belt Routing Overview - 2.3L EcoBoost™ 493
Drive Belt Routing Overview - 3.0L EcoBoost™ 493
Drive Belt Routing Overview - 3.0L Diesel 493
12V Battery 494
12V Battery – Troubleshooting 496
Adjusting the Headlamps 497
Exterior Bulbs 499
Interior Bulbs 508

Vehicle Care

Cleaning the Exterior 509
Cleaning the Interior 512
Repairing Minor Paint Damage 513
Waxing Your Vehicle 514

Storing Your Vehicle

Preparing Your Vehicle for Storage 515
Removing Your Vehicle From Storage 516

Wheel and Tire Information

Locating the Tire label 517
Information on the Tire Sidewall 517
Glossary of Tire Terminology 520
Tire Replacement Requirements 521
Using Snow Chains 522

Tire Care

Checking the Tire Pressures 524
Inflating the Tires 524
Tire Pressure Specifications - Excluding: Raptor 524
Tire Pressure Specifications - Raptor 526
Inspecting the Tire for Wear 527
Inspecting the Tire for Damage 528
Inspecting the Wheel Valve Stems 529
Tire Rotation 529

Tire Pressure Monitoring System

What Is the Tire Pressure Monitoring System 530
Tire Pressure Monitoring System Precautions 530
Tire Pressure Monitoring System Limitations 530
Viewing the Tire Pressures - Vehicles With: 8 Inch Screen 530
Viewing the Tire Pressures - Vehicles With: 12 Inch Screen 531
Resetting Tire Pressure Monitoring System 531
Tire Pressure Monitoring System – Troubleshooting 531

Changing a Road Wheel

Changing a Flat Tire - Excluding: Raptor 534
Changing a Flat Tire - Raptor 544
Wheel Nuts 554

Capacities and Specifications

Engine Specifications - 2.0L Diesel 555
Engine Specifications - 2.3L EcoBoost™, Plug-In Hybrid Electric Vehicle (PHEV) 556
Engine Specifications - 3.0L EcoBoost™ 557
Engine Specifications - 3.0L Diesel 558
Vehicle Dimensions - Chassis Cab 559
Vehicle Dimensions - Double Cab 560
Vehicle Dimensions - Single Cab 562
Vehicle Dimensions - SuperCab 564
Engine Oil Capacity and Specification - 2.0L Diesel 565
Engine Oil Capacity and Specification - 2.3L EcoBoost™, Plug-In Hybrid Electric Vehicle (PHEV) 566
Engine Oil Capacity and Specification - 3.0L EcoBoost™ 566
Engine Oil Capacity and Specification - 3.0L Diesel 567
Cooling System Capacity and Specification - 2.0L Diesel 568
Cooling System Capacity and Specification - 2.3L EcoBoost™, Plug-In Hybrid Electric Vehicle (PHEV) 569
Cooling System Capacity and Specification - 3.0L EcoBoost™ 570
Cooling System Capacity and Specification - 3.0L Diesel 570
Fuel Tank Capacity - 2.0L Diesel 571
Fuel Tank Capacity - Plug-In Hybrid Electric Vehicle (PHEV) 572
Fuel Tank Capacity 573
Fuel Tank Capacity - 3.0L Diesel 574
Air Conditioning System Capacity and Specification - 2.0L Diesel, Vehicles With: R1234YF Refrigerant 575
Air Conditioning System Capacity and Specification - 2.0L Diesel, Vehicles With: R134A Refrigerant 575
Air Conditioning System Capacity and Specification - Plug-In Hybrid Electric Vehicle (PHEV) 576
Air Conditioning System Capacity and Specification - Plug-In Hybrid Electric Vehicle (PHEV) 577
Air Conditioning System Capacity and Specification - 3.0L EcoBoost™ 578
Air Conditioning System Capacity and Specification - 3.0L Diesel 578
Washer Fluid Specification 579
AdBlue® Capacity and Specification 579
Manual Transmission Fluid Capacity and Specification 580
Clutch Fluid Capacity and Specification 580
Automatic Transmission Fluid Capacity and Specification 581
Brake Fluid Specification 582
Transfer Case Fluid Capacity and Specification 582

Front Axle Fluid Capacity and Specification - Excluding: Raptor 583
Front Axle Fluid Capacity and Specification - Raptor 584
Rear Axle Fluid Capacity and Specification - Excluding: Raptor 584
Rear Axle Fluid Capacity and Specification - Raptor 585

Vehicle Identification

Vehicle Identification Number 586
Vehicle Identification Plate 589

Connected Vehicle

What Is a Connected Vehicle 590
Connected Vehicle Requirements 590
Connected Vehicle Limitations 590
Connecting the Vehicle to a Mobile Network 590
Connecting the Vehicle to a Wi-Fi Network 590
Connected Vehicle Settings 591
Connected Vehicle – Troubleshooting 591

Vehicle Wi-Fi Hotspot

Creating a Vehicle Wi-Fi Hotspot 593
Changing the Vehicle Wi-Fi Hotspot Name or Password 593
Vehicle Wi-Fi Hotspot – Troubleshooting 594

Audio System

Audio System Precautions 595
Switching the Audio Unit On and Off 595
Selecting the Audio Source 595
Media Control Buttons 595
Adjusting the Volume 595
Setting a Memory Preset 596
Adjusting the Sound Settings 596
Setting the Clock and Date 596
FM Radio 596
Digital Audio Broadcasting Radio 597
Traffic Announcements 598

Center Display

Center Display Overview 599
Status Bar 599
Settings 600
Rebooting the Center Display 601

Voice Interaction

Ford Assistant 602

Alexa Built-In

What is Alexa Built-In 604
Alexa Built-In Requirements 604
Signing In to Your Account 604
Using Alexa Built-In 604
Alexa Built-In Settings 604

Phone

Phone Precautions 606
Connecting Your Phone 606
Phone Menu 606
Making and Receiving a Phone Call 607
Sending and Receiving a Text Message 608
Switching Text Message Notification On and Off 609
Enabling Apps on a Mobile Device 609
Switching Apple CarPlay On and Off 609
Switching Android Auto™ On and Off 609

Bluetooth®

Connecting a Bluetooth® Device 610
Playing Media Using Bluetooth® 610

Navigation

Accessing Navigation 611
Navigation Map Updates 611
Adjusting the Map 611
Live Traffic 611
Setting a Destination 611
Waypoints 612
Route Guidance 612
Trailer Towing Navigation 612

Geofencing

What Is Geofencing 614
How Does Geofencing Work 614
Geofencing Precautions 614
Geofencing Limitations 614
Geofencing Indicators 614

Vehicle Software Updates

Vehicle Software Updates 616
Software Update Settings 616
Software Update Indicators 617

Vehicle System Reset

Performing a System Reset 618

Auxiliary Switches

What Are the Auxiliary Switches 619
Locating the Auxiliary Switches 619
Locating the Auxiliary Switch Wiring 619
Identifying the Auxiliary Switch Wiring 620

Your Authorized Dealer - Turkey

Authorized Dealer Directory 622

Service Intervals - Turkey

Service Intervals 628

Customer Information

Rollover Warning 629
Third Party Software Copyright Acknowledgment 629
Declaration of Conformity 629
REACH 629
Radio Frequency Certification Labels 630
Replacement Parts Recommendation 710
Mobile Communications Equipment 711
eCall User Information 711
End User License Agreement 715
Converting or Modifying Your Vehicle 740

Appendices

Electromagnetic Compatibility 741

SVT

The Ford Special Vehicle Team (SVT) was established in 1991 to polish the Ford Oval by creating low-volume, factory-produced vehicles designed for those select few whose idea of driving is a high-powered, passionate experience – not just a means of getting from point A to point B.

In a move to support this spirited enthusiasm, Ford Motor Company carefully integrated the wide array of talent in the company into a small, cross-functional group of engineers and product planners, housed together under one roof with a common mission: to create vehicles specifically designed to meet the unique needs and desires of the knowledgeable driving enthusiast.

More than 400,000 SVT and Ford Performance vehicles were produced since the 1993 model year. These include the SVT Mustang Cobra and the Cobra R, the SVT F-150 Lightning, the SVT Contour, the SVT Focus, Ford GT, Shelby GT350, Shelby GT500, GT500KR and the F-150 SVT Raptor.

TEAM RS

Team RS traces its roots back nearly 60 years from the Lotus Ford Cortina and Twin Cam Escorts of the mid 1960's, through the first RS branded Escorts of the 1970's to the founding of Special Vehicle Engineering (SVE) in 1980. Through the 1980s and 90s, SVE delivered a breadth of vehicles from exciting XR and RS branded road going performance cars through homologation specials such as the iconic Sierra Cosworth RS500. The first ST (Sport Technology) vehicle appeared in 1996 as the ST24 Mondeo. The first collaboration between Ford's European and North American performance teams appeared in 2002 as the ST170 in Europe and SVT Focus in North America. In 2003, Team RS replaced SVE in Europe as performance car and motorsport personnel were brought together as one team. Team RS subsequently created the 2004 Fiesta ST, 2005 Focus ST and 2009 Focus RS.

FORD PERFORMANCE

Welcome to the Ford Performance family!

SVT and Team RS officially began working together as one team in 2009. In 2015, these two teams, along with Ford Racing, were formally combined establishing Ford Performance as a single team responsible for all performance and racing oriented products and activities worldwide at Ford Motor Company. Your Ford Performance vehicle represents the best of what Ford Performance has to offer from around the globe. Your vehicle has been designed and developed with the four hallmarks of Ford Performance in mind: Performance, Substance, Exclusivity and Value. We are proud and passionate about what we do, and we are glad you have made us your choice.

Ranger (TRA, TRB) Vehicles Built From: 01-11-2024, CG4010en enGBR, Edition date: 202407, DOM

ABOUT THIS PUBLICATION

WARNING: Driving while distracted can result in loss of vehicle control, crash and injury. We strongly recommend that you use extreme caution when using any device that may take your focus off the road. Your primary responsibility is the safe operation of your vehicle. We recommend against the use of any hand-held device while driving and encourage the use of voice-operated systems when possible. Make sure you are aware of all applicable local laws that may affect the use of electronic devices while driving.

WARNING: You risk death, fire, or serious injury to yourself and others if you do not follow the instruction highlighted by the warning symbol.

Thank you for choosing Ford. We recommend that you take some time to get to know your vehicle in order to benefit from greater safety and pleasure from driving it. Use this publication, whether in-vehicle center display screen, print, in Ford mobile app or online, to familiarize yourself with the features on your vehicle.

Note: *Use and operate your vehicle in line with all applicable laws and regulations.*

Note: *Pass on all printed owner's information when selling this vehicle.*

Features and Options

This publication describes product features and options available throughout the range of available models, sometimes even before they are generally available. It could describe options that are not available on the vehicle you have purchased.

Providing Feedback

If you would like to provide feedback to the Owner's Manual team, please email us at OWNERMANUALFEEDBACK@ford.com.

You will not receive a direct email response. Your submission will be investigated and necessary changes will be made to the Owner's Manual content.

To help investigate your submission, please include the following information:

- Your vehicle model
- The country in which your vehicle was purchased
- The Owner's Manual section needing investigation

Illustrations

Note: *Some of the illustrations in this publication could show features as used in different models, so could appear different to you on your vehicle.*

Location of Components

This manual may qualify the location of a component as left-hand side or right-hand side. The side is determined when facing forward in the seat.

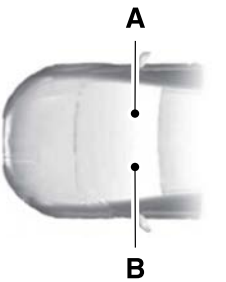

A Right-hand side.

B Left-hand side.

Accessing the Digital Owner's Manual

The online version of the Owner's Manual may contain the very latest information, which may vary slightly from the in-vehicle digital Owner's Manual originally provided with your vehicle. We recommend updating the in-vehicle digital Owner's Manual when prompted using Over The Air updates.

Vehicles with a Portrait Center Display Screen

The Owner's Manual application is located in the Apps list.

Vehicles with a Landscape Center Display Screen

Depending on your vehicle, the Owner's Manual application is located in either the Apps list or the Features list.

Accessing the Online and Printed Owner's Manual

Online Owner's Manual

- Through your device's app store, you can download the Ford mobile app.
- You can visit the local Ford Website.

Note: *To find the local Ford website, visit https://corporate.ford.com/operations/locations/global-links.html.*

Note: *We strongly recommend downloading a copy of the Owner's Manual and having it with you whenever you drive, and to view the information if you are unable to be inside the vehicle.*

Printed Owner's Manual

In U.S. and Canada, visit www.helminc.com or see an authorized dealer.

In Europe, visit www.z-order.de or see an authorized dealer.

For all other Countries, see your authorized dealer.

USING THIS PUBLICATION

To quickly locate information about your vehicle, use the word search within the Owner's Manual application.

SPECIAL NOTICES - TURKEY

Consumer* Information

*Consumer: Real or legal person acting for commercial or non-occupational purposes. If a driver drives his vehicle for commercial or occupational purposes, whether on full-time or part-time basis, he may not be evaluated as a "Consumer" under the legislation.

In the event a vehicle is purchased subject to Consumer Warranty terms but driven for commercial or occupational purposes thereafter or if purchased subject to Commercial Warranty Terms and then driven out of commercial or occupational purposes, COMMERCIAL WARRANTY TERMS shall apply under general statutory provisions. This shall bind Driver and other persons who take over such vehicle. Please see Ford Warranty Terms for detailed information.

Optional rights granted to consumers pursuant to Consumer Protection Law no. 6502 and Regulation for Introductory and Owner Manuals published at the Official Gazette dated 13.06.2014 and no. 29029 and information related to authorities to which consumers may file complaints and objections are as follows:

I. Optional Rights of Consumers

1) If merchandise is understood to be defective consumer may exercise one of following rights;

a) Reneging on contract by notifying that he is ready to return sold item,

b) Retaining sold item and asking discount from sales price pro rata to defect,

c) In case excessive expense is not required, asking free of charge repair of sold item, all expenses at seller's account,

d) If possible, asking replacement of sold item with an equivalent free of defects,

you can use one of these rights. Seller shall be liable to fulfill such request preferred by consumer.

2) Rights of free of charge repair or replacement of merchandise with an equivalent free of defects may also be exercised against manufacturer or importer. Seller, manufacturer and importer shall be severally liable for fulfillment of rights set out in this clause. Manufacturer or importer shall not be held liable if they prove that defect has arisen after merchandise is placed on the market by them.

3) If free of charge repair or replacement of merchandise with an equivalent free of defects would bring along disproportional inconvenience for seller, consumer may exercise one of rights of reneging on contract or discount from price pro rata to defect. During determination of disproportionality, matters such as value of merchandise free of defects, importance of defect and whether resorting to other optional rights would create any problems for consumer shall be considered.

4) In the event either right of free of charge repair or replacement of merchandise with an equivalent free of defects is chosen, such request must be fulfilled within maximum thirty business days from notification of this request to seller, manufacturer or importer. However, concerning merchandise included at the list attachment of regulation issued as per article 58 of Consumer Protection Law no. 6502, consumer's request for free of charge repair shall be fulfilled within maximum repair period set out at the regulation. Otherwise, consumer shall be free to exercise other optional rights.

5) In cases consumer chooses right of reneging on contract or discount from price pro rata to defect, full price paid or amount of discount from price shall be promptly refunded to consumer.

6) Any expenses incurred because of exercising optional rights shall be covered by the party fulfilling the right chosen by consumer. Consumer, along with one of such optional rights, may also claim compensation as per provisions of Turkish Code of Obligations dated 11/01/2011 and no. 6098.

II. Consumer Complaints and Objections

Consumers may file applications regarding complaints and objections to consumer courts and consumer arbitration committees in accordance with arrangements provided at Consumer Protection Law no. 6502.

Maufacturer or Importer

Ford Otomotiv Sanayi A.S.
Akpınar Mah. Hasan Basri Cad. No: 2
34885 Sancaktepe/Istanbul
Trade Registration No: 73232 - Istanbul
Tel: 0.216 564 71 00
Fax: 0.216 564 73 85
www.fordotosan.com.tr

Service Life

The service life of this vehicle is 10 years.

SYMBOLS USED ON YOUR INSTRUMENT CLUSTER

Depending on your vehicle options, market, and instrument cluster type, not all symbols shown are available.

Lighting and Signaling

High beams. See **Headlamp Indicators** (page 100).

Auto high beams. See **Automatic High Beam Control Indicators** (page 105).

Front fog lamps. See **Using the Front Fog Lamps** (page 102).

Turn signal - right. See **Using the Turn Signal Lamps** (page 101).

Turn signal - left. See **Using the Turn Signal Lamps** (page 101).

Positioning/side lights. See **Headlamp Indicators** (page 100).

Exterior bulb failure. See **Exterior Bulb Specification Chart** (page 499).

Brakes

Brake failure. See **Brakes – Warning Lamps** (page 275). See **Electric Parking Brake – Warning Lamps** (page 282).

Brake failure. See **Brakes – Warning Lamps** (page 275). See **Electric Parking Brake – Warning Lamps** (page 282).

Electric parking brake fault. See **Electric Parking Brake – Warning Lamps** (page 282).

Anti-lock brake system malfunction. See **Anti-Lock Braking System Indicators** (page 274). See **Brakes – Warning Lamps** (page 275).

Automatic brake hold. See **Auto Hold Indicators** (page 289).

Automatic brake hold off or unavailable. See **Auto Hold Indicators** (page 289).

Visibility

Windshield washer fluid level. See **Wipers and Washers – Warning Lamps** (page 98).

Engine

Check engine. See **Starting and Stopping the Engine – Warning Lamps** (page 193). See **Catalytic Converter – Warning Lamps** (page 228). See **Checking the Coolant** (page 485).

Engine oil pressure. See **Starting and Stopping the Engine – Warning Lamps** (page 193).

Engine coolant temperature. See **Catalytic Converter – Warning Lamps** (page 228). See **Checking the Coolant** (page 485).

Auto Start/Stop. See **Auto-Start-Stop Indicators** (page 202).

Auto Start/Stop off or unavailable. See **Auto-Start-Stop Indicators** (page 202).

Diesel pre-heat. See **Starting a Diesel Engine** (page 188). See **Starting a Diesel Engine** (page 189).

Diesel exhaust fluid. See **Selective Catalytic Reduction System – Warning Lamps** (page 226).

Engine emission system temperature. See **Selective Catalytic Reduction System – Warning Lamps** (page 226).

Exhaust filter regeneration disabled. See **Diesel Particulate Filter – Warning Lamps** (page 220).

Fuel

Fuel. See **Fuel and Refueling – Warning Lamps** (page 216).

Water/Moisture in fuel system. See **Draining the Fuel Filter Water Trap** (page 491).

Transmission

Non-emission powertrain fault. See **Starting and Stopping the Engine – Warning Lamps** (page 193).

Shift up. See **Manual Transmission Shift Indicators** (page 249).

Shift down. See **Manual Transmission Shift Indicators** (page 249).

Vehicle Handling

Selectable drive mode - normal. See **Normal** (page 339).

Selectable drive mode - Eco. See **Eco** (page 339).

Selectable drive mode - sport. See **Sport** (page 347).

Selectable drive mode - tow/haul. See **Tow/Haul** (page 340).

Selectable drive mode - slippery. See **Slippery** (page 340). See **Slippery** (page 346).

Selectable drive mode - mud/ruts. See **Mud/Ruts** (page 339).

Selectable drive mode - sand. See **Sand** (page 340).

Selectable drive mode - normal. See **Normal** (page 345).

Selectable drive mode - slippery. See **Slippery** (page 346).

Selectable drive mode - rock crawl. See **Rock Crawl** (page 346).

Selectable drive mode - baja. See **Baja** (page 345).

Selectable drive mode - Off-road. See **Mud/Ruts** (page 345).

Steering system fault. See **Steering – Warning Lamps** (page 304).

Differential lock - rear axle. See **Electronic Locking Differential Indicators** (page 270).

Differential lock - front axle. See **Electronic Locking Differential Indicators** (page 270).

Off road turn assist - right. See **Trail Turn Assist Indicators** (page 300).

Off road turn assist - left. See **Trail Turn Assist Indicators** (page 300).

4X2. See **Four-Wheel Drive Indicators** (page 264).

4X4 auto. See **Four-Wheel Drive Indicators** (page 264).

4X4 high. See **Four-Wheel Drive Indicators** (page 264).

4x4 low. See **Four-Wheel Drive Indicators** (page 264).

Driver Assistance

Cruise control. See **Cruise Control Indicators** (page 320).

Adaptive cruise control. See **Adaptive Cruise Control Indicators** (page 328).

Hill descent control. See **Hill Descent Control Indicator** (page 303).

Trail control. See **Trail Control Indicators** (page 298).

Lane centering assist. See **Lane Centering Indicators** (page 331).

Lane keeping assist off – truck. See **Lane Keeping System Indicators** (page 358).

Speed limiter. See **Speed Limiter Indicators** (page 352).

Safety

Seatbelt. See **Seatbelt Precautions** (page 60). See **Seatbelt Reminder Indicators** (page 61).

Airbag. See **Seatbelt Precautions** (page 60).

Stability control system active or not available. See **Traction Control Indicator** (page 291). See **Stability Control Indicator** (page 295).

Stability control system off. See **Traction Control Indicator** (page 291). See **Drive Mode Control – Warning Lamps** (page 341).

Tire failure/Low tire pressure. See **What Is the Tire Pressure Monitoring System** (page 530). See **Tire Pressure Monitoring System – Warning Lamps** (page 531).

Forward collision warning system. See **How Does Pre-Collision Assist Work** (page 376).

Forward collision warning system off or unavailable. See **Pre-Collision Assist – Warning Lamps** (page 381).

Blind spot information system off or unavailable. See **Blind Spot Information System Indicators** (page 370).

Icy road conditions. See **Climate Control – Warning Lamps** (page 144).

Driver alert system off or unavailable. See **Driver Alert Indicators** (page 386).

Door(s) ajar. See **Doors and Locks – Warning Lamps** (page 82).

Electrical Systems

Battery charge level. See **Catalytic Converter – Warning Lamps** (page 228). See **12V Battery – Warning Lamps** (page 496).

Battery shutoff. See **High Voltage Battery – Warning Lamps** (page 231).

Propulsion battery temperature. See **High Voltage Battery – Warning Lamps** (page 231).

Limited performance mode. See **High Voltage Battery – Warning Lamps** (page 231).

High voltage hazard. See **High Voltage Battery – Warning Lamps** (page 231).

Ready to drive. See **Plug-In Hybrid Electric Vehicle Information** (page 198).

Hybrid/electric system failure. See **Plug-In Hybrid Electric Vehicle Information** (page 198).

EV mode now. See **EV Now** (page 336).

EV mode later. See **EV Later** (page 336).

EV mode charge. See **EV Charge** (page 336).

WARNING: Do not connect wireless plug-in devices to the data link connector. Unauthorized third parties could gain access to vehicle data and impair the performance of safety related systems. Only allow repair facilities that follow our service and repair instructions to connect their equipment to the data link connector.

We respect your privacy and are committed to protecting it. The information contained in this publication was correct at the time of release, but as technology rapidly changes, we recommend that you visit the local Ford website for the latest information.

Your vehicle has electronic control units that have data recording functionality and the ability to permanently or temporarily store data. This data could include information on the condition and status of your vehicle, vehicle maintenance requirements, events and malfunctions. The types of data that can be recorded are described in this section. Some of the data recorded is stored in event logs or error logs.

Note: *Error logs are reset following a service or repair.*

Note: *We may provide information in response to requests from law enforcement, other government authorities and third parties acting with lawful authority or through a legal process. Such information could be used by them in legal proceedings.*

Data recorded includes, for example:

- Operating states of system components, for example fuel level, tire pressure and battery charge level.
- Vehicle and component status, for example wheel speed, deceleration, lateral acceleration and seatbelt status.
- Events or errors in essential systems, for example headlamps and brakes.
- System responses to driving situations, for example airbag deployment and stability control.
- Environmental conditions, for example temperature.

Some of this data, when used in combination with other information, for example an accident report, damage to a vehicle or eyewitness statements, could be associated with a specific person.

Services That We Provide

If you use our services, we collect and use data, for example account information, vehicle location and driving characteristics, that could identify you. We transmit this data through a dedicated, protected connection. We only collect and use data to enable your use of our services to which you have subscribed, with your consent or where permitted by law. For additional information, see the terms and conditions of the services to which you have subscribed.

For additional information about our privacy policy, refer to the local Ford website.

Services That Third Parties Provide

We recommend that you review the terms and conditions and data privacy information for any services equipped with your vehicle or to which you subscribe. We take no responsibility for services that third parties provide.

SERVICE DATA

Our dealers collect service data through the data link connector in your vehicle. They use service data, for example error logs, to help them if you take your vehicle for repair. They share this data with our technical team, if required, to help with diagnosis. In addition to using the information for diagnosis and repair, we use and share service data with our service providers, for example parts suppliers, where required and where permitted by law, for continuous improvement or with other information that we have about you, for example your contact information, to offer you products and services that may be of interest to you according to your preferences and where allowed by law. Our service providers are equally required by law to protect your data and retain it in accordance with data retention policies.

Note: *Third party repair facilities can also collect service data through the data link connector.*

EVENT DATA

This vehicle is equipped with an event data recorder. The main purpose of an event data recorder is to record, in certain crash or near crash-like situations, such as an airbag deployment or hitting a road obstacle; this data will assist in understanding how a vehicle's systems performed. The event data recorder is designed to record data related to vehicle dynamics and safety systems for a short period of time, typically 30 seconds or less.

The event data recorder in this vehicle is designed to record such data as:

- How various systems in your vehicle were operating.
- Whether or not the driver and passenger seatbelts were buckled/fastened.
- How far (if at all) the driver was depressing the accelerator and/or the brake pedal.
- How fast the vehicle was traveling.
- Where the driver was positioning the steering wheel.

This data can help provide a better understanding of the circumstances in which crashes and injuries occur.

Note: *Event data recorder data is recorded by your vehicle only if a non-trivial crash situation occurs; no data is recorded by the event data recorder under normal driving conditions and no personal data or information (for example name, gender, age, and crash location) is recorded. However, parties, such as law enforcement, could combine the event data recorder data with the type of personally identifying data routinely acquired during a crash investigation.*

To read data recorded by an event data recorder, special equipment is required, and access to the vehicle or the event data recorder is needed. In addition to the vehicle manufacturer, other parties, such as law enforcement, that have such special equipment, can read the information if they have access to the vehicle or the event data recorder.

Ranger (TRA, TRB) Vehicles Built From: 01-11-2024, CG4010en enGBR, Edition date: 202407, DOM

SETTINGS DATA

Your vehicle has electronic control units that have the ability to store data based on your personalized settings. The data is stored locally in the vehicle or on devices that you connect to it, for example, a USB drive or digital music player. You can delete some of this data and also choose whether to share it through the services to which you subscribe.

Comfort and Convenience Data

Data recorded includes, for example:

- Seat and steering wheel position.
- Climate control settings.
- Radio presets.

Entertainment Data

Data recorded includes, for example:

- Music, videos or album art.
- Contacts and corresponding address book entries.
- Navigation destinations.

CONNECTED VEHICLE DATA

The modem has a SIM. The modem was enabled when your vehicle was built and periodically sends messages to stay connected to the cell phone network. Subject to your consent, the vehicle may send vehicle, driving and location data. These messages could include information that identifies your vehicle, the SIM and the electronic serial number of the modem. Cell phone network service providers could have access to additional information, for example cell phone network tower identification. For additional information about our privacy policy, visit www.FordConnected.com or refer to your local Ford website.

Note: *The modem continues to send information unless you disable the modem or stop the modem from sharing data by changing the modem settings. See* ***Connected Vehicle*** *(page 590).*

Note: *The service can be unavailable or interrupted for a number of reasons, for example environmental or topographical conditions and data plan coverage.*

Note: *To find out if your vehicle has a modem, visit www.FordConnected.com.*

MOBILE DEVICE DATA

If you connect a mobile device to your vehicle, you can display data from your device on the touchscreen for example, music and album art. You can share your vehicle data with mobile apps on your device through the system.

The mobile apps function operates by your connected device sending data to us in the United States. The data is encrypted and includes, for example, the vehicle identification number of your vehicle, the SYNC module serial number, odometer, enabled apps, usage statistics and debugging information. We retain it only as long as necessary to provide the service, to troubleshoot, for continuous improvement and to offer you products and services that may be of interest to you according to your preferences and where allowed by law.

If you connect a cell phone to the system, the system creates a profile that links to that cell phone. The cell phone profile enables more mobile features and efficient operation. The profile contains, for example data from your phonebook, read and unread text messages and call history, including history of calls when your cell phone was not connected to the system.

Ranger (TRA, TRB) Vehicles Built From: 01-11-2024, CG4010en enGBR, Edition date: 202407, DOM

If you connect a media device, the system creates and retains a media device index of supported media content. The system also records a short diagnostic log of approximately 10 minutes of all recent system activity.

The cell phone profile, media device index and diagnostic log remain in your vehicle unless you delete them and are generally accessible only in your vehicle when you connect your cell phone or media device. If you no longer plan to use the system or your vehicle, we recommend you use the system reset function to erase the stored information. See **Performing a System Reset** (page 618).

System data cannot be accessed without special equipment and access to your vehicle's module.

For additional information about our privacy policy, refer to the local Ford website.

Note: *To find out if your vehicle has connectivity technology, visit www.FordConnected.com.*

EMERGENCY CALL SYSTEM DATA - VEHICLES WITH: ECALL

When the emergency call system is active, it may disclose to emergency services that your vehicle has been in a crash involving the deployment of an airbag or activation of the fuel pump shut-off, or deactivation of the high-voltage battery. Certain versions or updates to the emergency call system may also be capable of electronically or verbally disclosing to emergency services operators your vehicle location or other details about your vehicle or crash to assist emergency services operators to provide the most appropriate emergency services. If you do not want to disclose this information, do not activate the emergency call system.

Examples of data that the system could transmit are:

- Vehicle identification number.
- Vehicle propulsion storage type.
- Current time.
- Vehicle location and direction.
- Whether the call was automatically or manually initiated.
- Vehicle category.
- Number of occupants in the vehicle.

Note: *You cannot deactivate emergency call systems that are required by law.*

PROTECTING THE ENVIRONMENT

Sustainability is a priority at Ford. We are constantly looking for ways to reduce our impact on the planet while providing customers with great products and delivering a strong business. You should play your part in protecting the environment. Correct vehicle usage and the authorized disposal of waste, cleaning and lubrication materials are significant steps toward this aim.

For additional information about our sustainability progress and initiatives, visit *www.sustainability.ford.com*.

France Only

STEERING WHEEL - EXCLUDING: RAPTOR

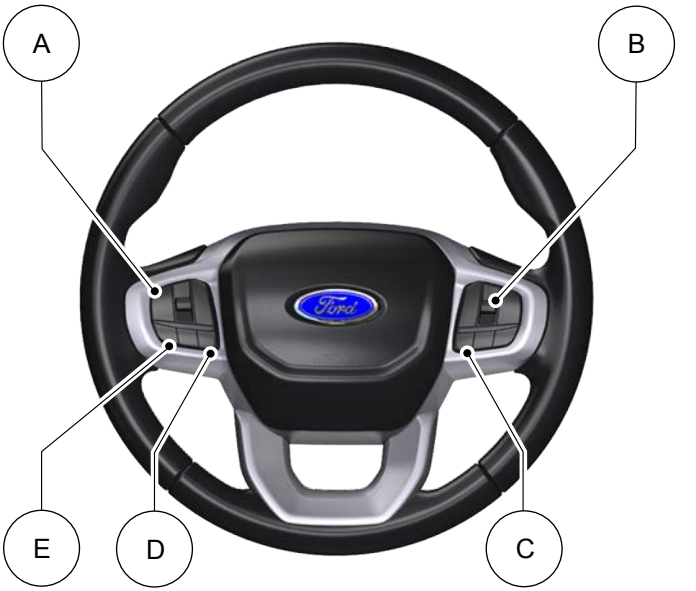

A See **Switching Cruise Control On and Off** (page 319). See **Switching Adaptive Cruise Control On and Off** (page 324).

B See **Using the Instrument Cluster Display Controls** (page 125).

C See **Making and Receiving a Phone Call** (page 607).

D See **Using Ford Assistant** (page 602).

E See **Adjusting the Volume** (page 595).

Ranger (TRA, TRB) Vehicles Built From: 01-11-2024, CG4010en enGBR, Edition date: 202407, DOM

STEERING WHEEL - RAPTOR

A See **Switching Cruise Control On and Off** (page 319). See **Switching Adaptive Cruise Control On and Off** (page 324).

B See **Using the Instrument Cluster Display Controls** (page 125).

C See **Selecting a Drive Mode** (page 343).

D See **Using Ford Assistant** (page 602).

Ranger (TRA, TRB) Vehicles Built From: 01-11-2024, CG4010en enGBR, Edition date: 202407, DOM

INSTRUMENT PANEL - LHD, EXCLUDING: RAPTOR

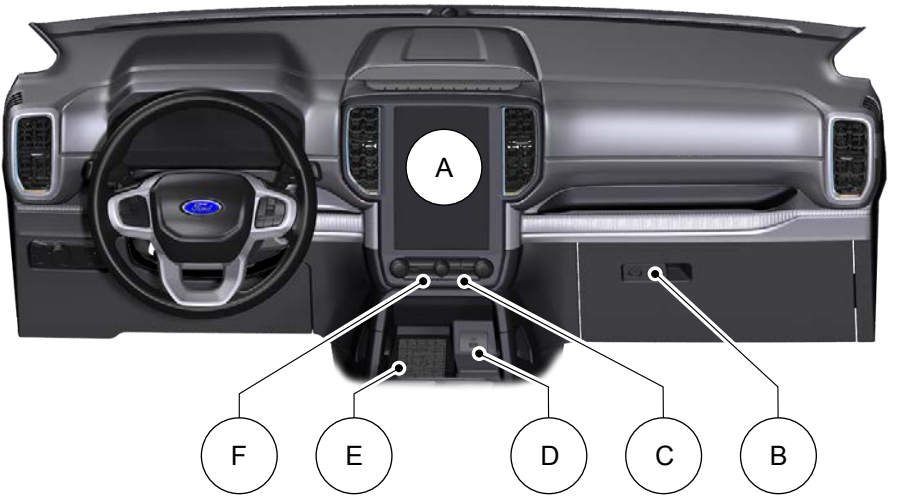

A See **Center Display Overview** (page 599).

B See **Opening the Glove Compartment** (page 185).

C See **Identifying the Climate Control Unit** (page 140). See **Identifying the Climate Control Unit** (page 145).

D See **Charging a Device** (page 170).

E See **Charging a Wireless Device** (page 183).

F See **Switching the Hazard Flashers On and Off** (page 451).

INSTRUMENT PANEL - RHD, EXCLUDING: RAPTOR

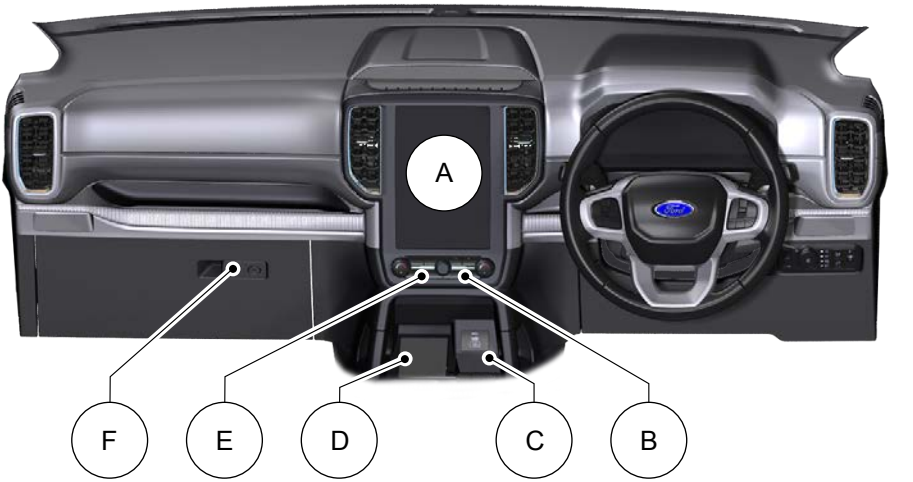

A See **Center Display Overview** (page 599).

B See **Identifying the Climate Control Unit** (page 140). See **Identifying the Climate Control Unit** (page 145).

C See **Charging a Device** (page 170).

D See **Charging a Wireless Device** (page 183).

E See **Switching the Hazard Flashers On and Off** (page 451).

F See **Opening the Glove Compartment** (page 185).

INSTRUMENT PANEL - RAPTOR, LHD

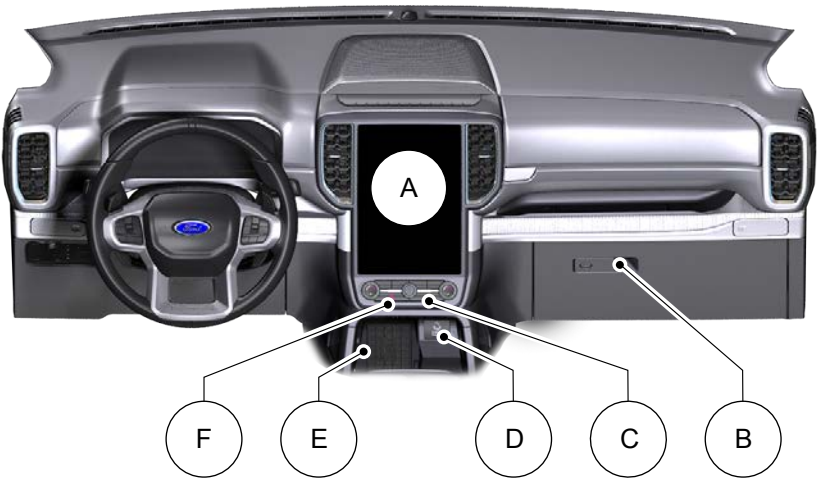

A See **Center Display Overview** (page 599).

B See **Opening the Glove Compartment** (page 185).

C See **Identifying the Climate Control Unit** (page 140). See **Identifying the Climate Control Unit** (page 145).

D See **Charging a Device** (page 170).

E See **Charging a Wireless Device** (page 183).

F See **Switching the Hazard Flashers On and Off** (page 451).

INSTRUMENT PANEL - RAPTOR, RHD

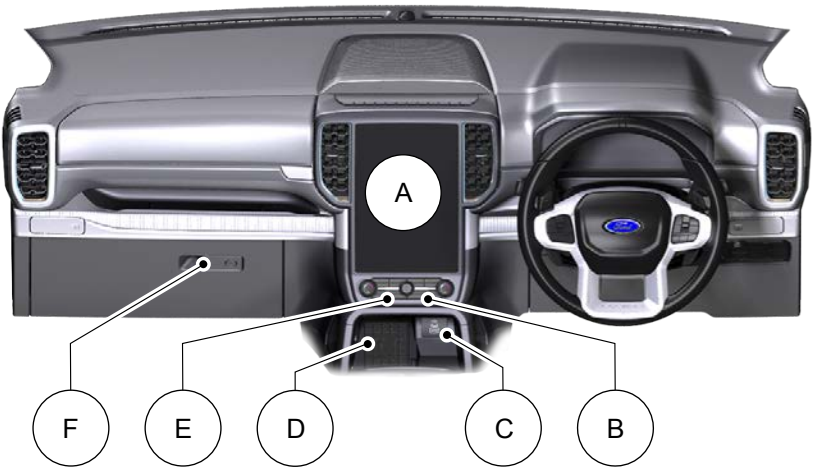

A See **Center Display Overview** (page 599).

B See **Identifying the Climate Control Unit** (page 140). See **Identifying the Climate Control Unit** (page 145).

C See **Charging a Device** (page 170).

D See **Charging a Wireless Device** (page 183).

E See **Switching the Hazard Flashers On and Off** (page 451).

F See **Opening the Glove Compartment** (page 185).

Ranger (TRA, TRB) Vehicles Built From: 01-11-2024, CG4010en enGBR, Edition date: 202407, DOM

VEHICLE INTERIOR - LHD, EXCLUDING: RAPTOR

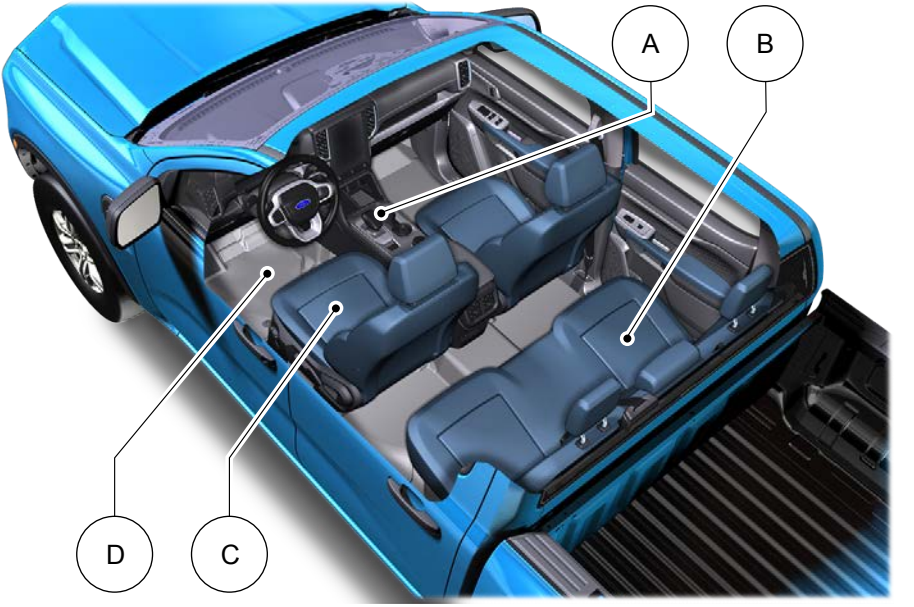

A See **Automatic Transmission Position Indicators** (page 252). See **Manual Transmission Shift Indicators** (page 249).

B See **Unfolding the Seat Backrest** (page 163).

C See **Sitting in the Correct Position** (page 155).

D See **Floor Mats** (page 449).

VEHICLE INTERIOR - RHD, EXCLUDING: RAPTOR

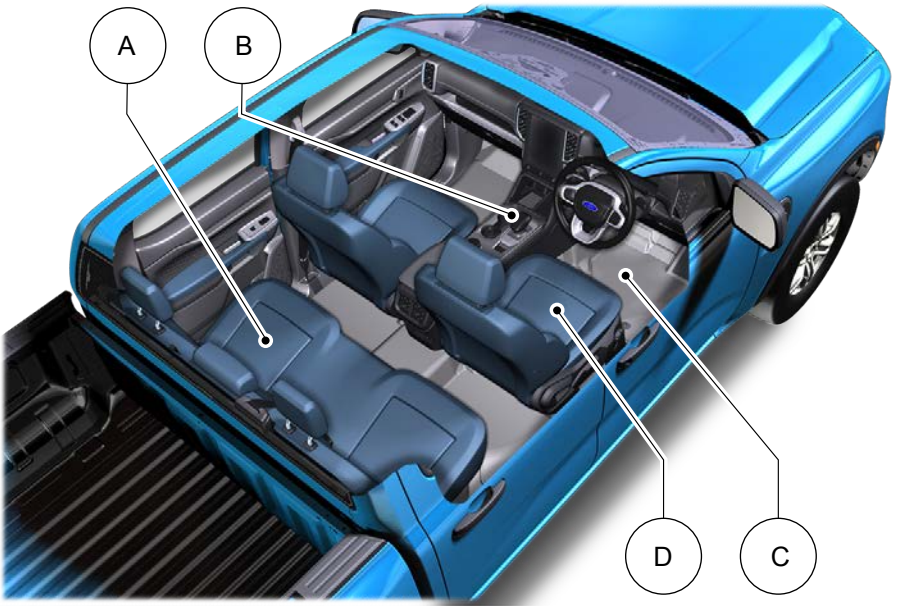

A See **Unfolding the Seat Backrest** (page 163).

B See **Automatic Transmission Position Indicators** (page 252). See **Manual Transmission Shift Indicators** (page 249).

C See **Floor Mats** (page 449).

D See **Sitting in the Correct Position** (page 155).

Ranger (TRA, TRB) Vehicles Built From: 01-11-2024, CG4010en enGBR, Edition date: 202407, DOM

VEHICLE INTERIOR - RAPTOR, LHD

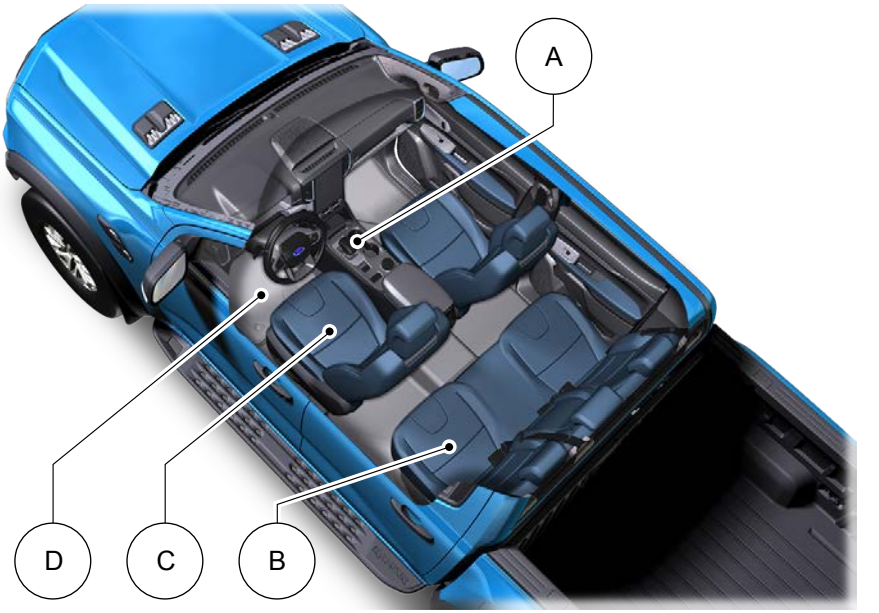

A See **Automatic Transmission Position Indicators** (page 252).
B See **Unfolding the Seat Backrest** (page 163).
C See **Sitting in the Correct Position** (page 155).
D See **Floor Mats** (page 449).

VEHICLE INTERIOR - RAPTOR, RHD

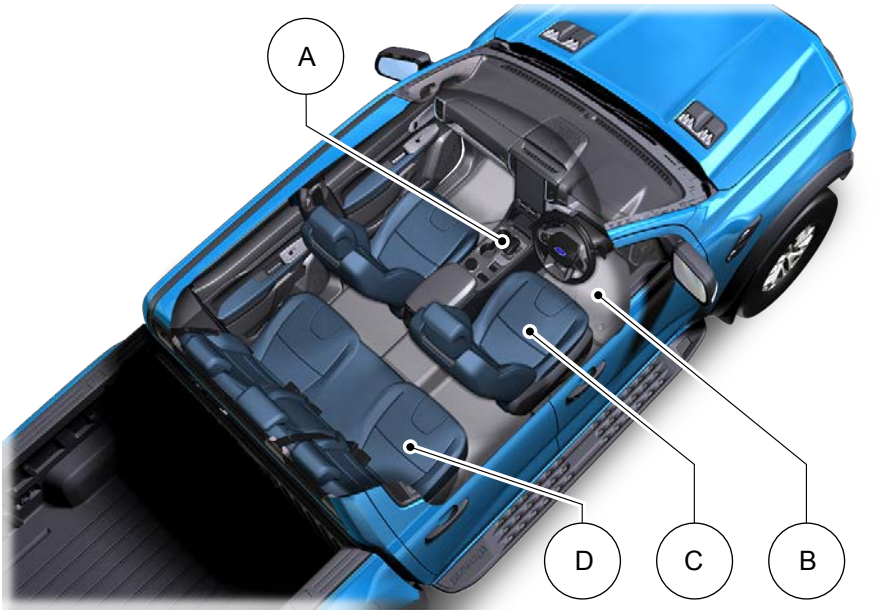

A See **Automatic Transmission Position Indicators** (page 252).
B See **Floor Mats** (page 449).
C See **Sitting in the Correct Position** (page 155).
D See **Unfolding the Seat Backrest** (page 163).

FRONT EXTERIOR - EXCLUDING: RAPTOR

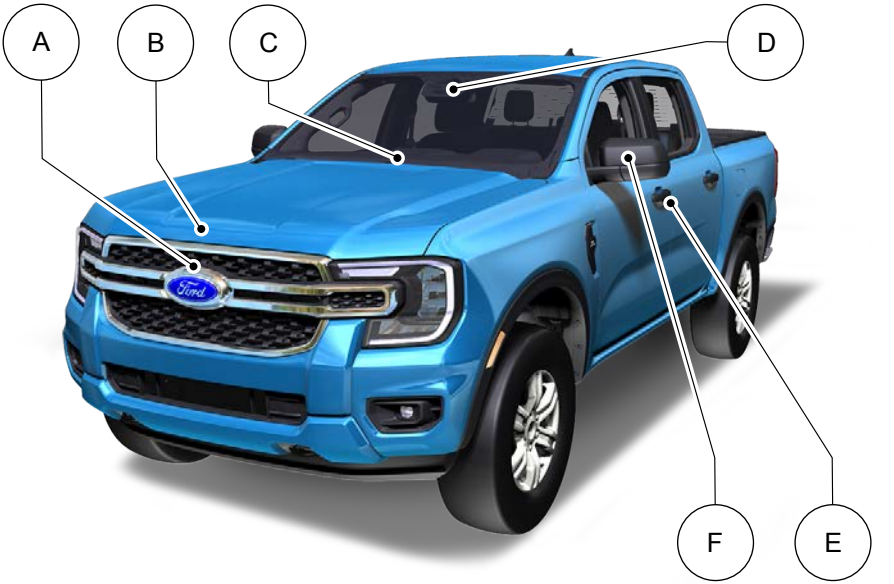

A See **Locating the 360 Degree Cameras** (page 315).

B See **Opening and Closing the Hood** (page 477).

C See **Replacing the Front Wiper Blades** (page 96).

D See **What Is the Lane Keeping System** (page 356).

E See **Unlocking and Locking the Doors Using the Key Blade** (page 80). See **Unlocking and Locking the Doors Using the Remote Control** (page 80).

F See **Adjusting the Exterior Mirrors** (page 117).

Ranger (TRA, TRB) Vehicles Built From: 01-11-2024, CG4010en enGBR, Edition date: 202407, DOM

FRONT EXTERIOR - RAPTOR

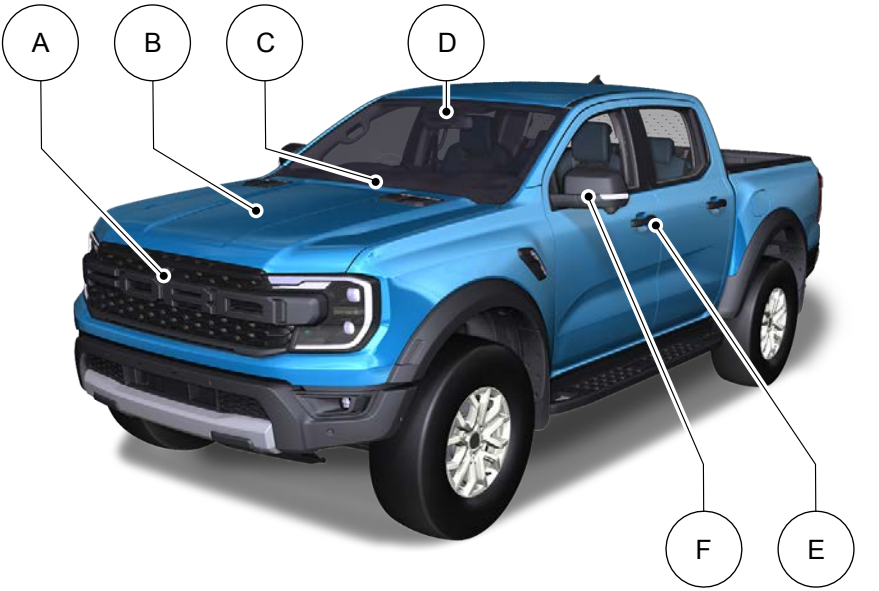

A See **Locating the 360 Degree Cameras** (page 315).

B See **Opening and Closing the Hood** (page 477).

C See **Replacing the Front Wiper Blades** (page 96).

D See **What Is the Lane Keeping System** (page 356).

E See **Unlocking and Locking the Doors Using the Key Blade** (page 80). See **Unlocking and Locking the Doors Using the Remote Control** (page 80).

F See **Adjusting the Exterior Mirrors** (page 117).

Ranger (TRA, TRB) Vehicles Built From: 01-11-2024, CG4010en enGBR, Edition date: 202407, DOM

REAR EXTERIOR - EXCLUDING: RAPTOR

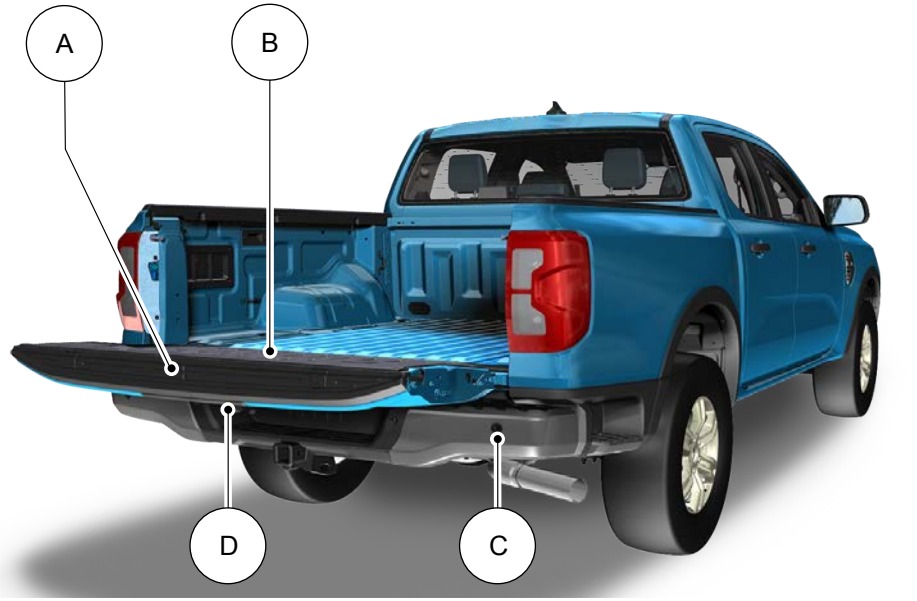

A See **Opening the Tailgate From Outside Your Vehicle** (page 87).
B See **Tailgate Work Surface** (page 87).
C See **Locating the Rear Parking Aid Sensors** (page 308).
D See **Locating the 360 Degree Cameras** (page 315).

REAR EXTERIOR - RAPTOR

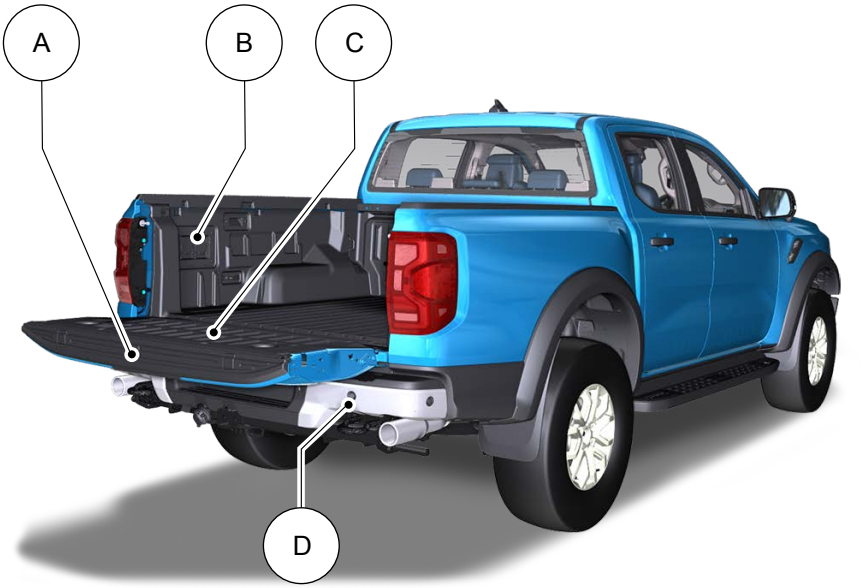

A See **Opening the Tailgate From Outside Your Vehicle** (page 87).
B See **Power Outlet Precautions** (page 171).
C See **Tailgate Work Surface** (page 87).
D See **Locating the Rear Parking Aid Sensors** (page 308).

Ranger (TRA, TRB) Vehicles Built From: 01-11-2024, CG4010en enGBR, Edition date: 202407, DOM

UNIQUE FEATURES

Powertrain

- 3.0L Twin Turbo EcoBoost engine.
- 10R60 10-speed automatic transmission with Magnesium paddle shifters and water to air transmission cooler.
- Electronic Transfer Case with Front Locking Differential.
- Rear differential capable of locking in 4A, 4H and 4L.
- Electronically controlled Twin Pipe Active Exhaust with switchable modes and black 3-inch tips.
- Anti Lag Technology available in Baja Mode.

Chassis

- Cast aluminum lower control arms.
- Steel upper control arms.
- Fox Factory 2.5 Live Valve Internal Bypass front shocks.
- Fox Factory 2.5 Live Valve Internal Bypass Remote Reservoir rear shocks.
- Unique underbody shields.
- Heavy duty reinforced frame.
- Unique Watts Link Rear suspension.
- Ride height sensors at each corner.
- 33 inch All Terrain Tires on 17-inch wheels.

Exterior

- Modified rear bumper with integrated rear tow hooks.
- Underbody shields plus front tow hooks.
- Hood with functional air extractors.
- Front and rear LED marker lamps.
- 17 x 8.5 aluminum wheels.
- Optional 17 x 8.5 bead lock compatible wheels.

Interior

- Unique terrain-mode and trail control functionality plus six auxiliary switches.
- Unique front and rear seats with code orange accents.
- SYNC 4.0 with off-road screen and 360-degree camera.
- Unique steering wheel with switches to control and customize MyMode, exhaust and damping.

Ranger (TRA, TRB) Vehicles Built From: 01-11-2024, CG4010en enGBR, Edition date: 202407, DOM

CHILD SAFETY PRECAUTIONS

Only child restraints certified to ECE-R129 or ECE-R44.03 (or later) have been tested and approved for use in your vehicle.

Note: *Mandatory use of child restraints varies from country to country.*

WARNING: Extreme Hazard! Never use a rearward facing child restraint on a seat protected by an active airbag in front of it. Death or serious injury to the child can occur.

WARNING: You must switch the passenger airbag off when using a rearward facing child restraint on the front seat.

WARNING: You must switch the passenger airbag on following the removal of the child restraint.

WARNING: Do not modify child restraints in any way.

WARNING: Do not hold a child on your lap when your vehicle is moving.

WARNING: Do not leave children or pets unattended in your vehicle. Failure to follow this instruction could result in personal injury or death.

WARNING: If your vehicle has been involved in a crash, have the child restraints checked.

WARNING: Do not put the shoulder section of the seatbelt or allow the child to put the shoulder section of the seatbelt under their arm or behind their back. Failure to follow this instruction could reduce the effectiveness of the seatbelt and increase the risk of injury or death in a crash.

WARNING: Do not use pillows, books or towels to boost your child's height. Failure to follow this instruction could result in personal injury or death.

WARNING: You must reinstall the head restraint following the removal of the child restraint.

WARNING: Always make sure your child is secured properly in a device that is appropriate for their height, age and weight. Child safety restraints must be bought separately from your vehicle. Failure to follow these instructions and guidelines may result in an increased risk of serious injury or death to your child.

Ranger (TRA, TRB) Vehicles Built From: 01-11-2024, CG4010en enGBR, Edition date: 202407, DOM

WARNING: If you use a child restraint and a seatbelt, make sure that the seatbelt is not slack or twisted.

WARNING: Do not install a booster seat or a booster cushion with only the lap strap of the seatbelt.

WARNING: Do not install a booster seat or a booster cushion with a seatbelt that is slack or twisted.

WARNING: Make sure that your children sit in an upright position.

CHILD RESTRAINT ANCHOR POINTS

WHAT ARE THE CHILD RESTRAINT ANCHOR POINTS

Anchor points are designed to allow you to quickly and safely install a child restraint.

LOCATING THE CHILD RESTRAINT LOWER ANCHOR POINTS

LOCATING THE CHILD RESTRAINT TOP TETHER ANCHOR POINTS

CHILD RESTRAINTS

CHILD RESTRAINT POSITION INFORMATION

Seating Positions	Mass Group Categories				
	0	0+	1	2	3
	0–10 kg (0–22 lb)	0–13 kg (0–29 lb)	9–18 kg (20–40lb)	15–25 kg (33–55lb)	22–36 kg (49–79lb)
Front passenger seat with airbag **ON**.	X	X	UF[1]	UF[1]	UF[1]
Front passenger seat with airbag **OFF**.	U[1]	U[1]	U[1]	U[1]	U[1]
Rear seats.[2]	U	U	U	U	U

[1] We recommend that you secure children in a government approved child restraint, on the rear seat.

[2] Do not use a child restraint with a support leg on the rear center seat unless stated as suitable in the child restraint manufacturer's product information.

X Not suitable for children in this mass group.

U Suitable for universal category child restraints approved for use in this mass group.

UF Suitable for universal category forward facing child restraints approved for use in this mass group.

ISOFIX Child Restraints

Seating Positions		Mass Group Categories				
		0	0	0+	1	1
		Lateral Facing	Rearward Facing	Rearward Facing	Forward Facing	Rearward Facing
		0–10 kg (0–22lb)	0–10 kg (0–22lb)	0–13 kg (0–29lb)	9–18 kg (20–40lb)	9–18 kg (20–40lb)
Front passenger seat.	Size class.	No ISOFIX				
	Size type.					
Rear outermost seat ISOFIX.	Size class.	X	E[1]	C, D, E[1]	A, B, B1[1]	C, D[1]

Seating Positions		Mass Group Categories				
		0	0	0+	1	1
		Lateral Facing	Rearward Facing	Rearward Facing	Forward Facing	Rearward Facing
		0–10 kg (0–22 lb)	0–10 kg (0–22 lb)	0–13 kg (0–29 lb)	9–18 kg (20–40 lb)	9–18 kg (20–40 lb)
	Fixture.	X	R1[1]	R1, R2X, R2, R3[1]	F2, F2X, F3[1]	R2X, R2, R3[1]
	Size type.	X	IL	IL	IL, IUF	IL
Rear center seat.	Size class.	No ISOFIX				
	Size type.					

[1] The size class and fixture are defined for both universal and semi-universal child restraint systems. You can see the identification letters on ISOFIX child restraints.

IL Suitable for use with particular ISOFIX child restraint systems in the semi-universal category. Refer to the child restraint system manufacturer vehicle recommendation list for additional information.

IUF Suitable for use with forward facing ISOFIX child restraint systems in the universal category.

i-Size Child Restraints

	Front Passenger Seat	Rear Outermost Seats	Rear Center Seat
Rearward facing child restraint systems on front passenger seat with airbag **ON**.	X	-	-
i-Size child restraint systems.	X	i-U	X
Suitable booster fixture.	B2, B3[1]	B2, B3[1]	B2, B3[1]

[1] The fixture is defined for booster child restraint systems. You can see the identification letters on i-Size boosters.

i-U Suitable for use with forward and rearward facing i-Size child restraint systems.

X Not suitable for use with i-Size child restraint systems.

CHILD RESTRAINTS RECOMMENDATION

Size Class Categories	Manufacturer	Model	Attachment
40–83 cm (15.75–32.68 in) 0–13 kg (0–29 lb)	Maxi-Cosi.	Pebble 360 and FamilyFix 360 base.[1]	ISOFIX and support leg (base) or seatbelt only.
40–105 cm (15.75–41.34 in) 0–17.5 kg (0–39 lb)	Maxi-Cosi.	Pearl 360 and FamilyFix 360 base.[1]	ISOFIX and support leg (base).
100–150 cm (39.37–59.06 in) 15–36 kg (33–79 lb)	Britax Römer.	KidFix M i-Size.[1, 2]	ISOFIX and seatbelt or seatbelt only.

[1]We recommend that you secure children using an ISOFIX child restraint on the rear outermost seats.

[2]We recommend that you use a booster seat that combines a cushion with a backrest instead of a booster cushion only.

See an authorized dealer for the latest details relating to our recommended child restraints.

INSTALLING CHILD RESTRAINTS

USING SEATBELTS - EXCLUDING: RAPTOR

WARNING: EXTREME HAZARD! Do not use a rearward facing child restraint on a seat protected by an airbag in front of it!

WARNING: Incorrectly fitted child restraints may swing, tip or come away causing death or injury.

WARNING: Do not use a child restraint if the tether strap falls into a split in the vehicle seat back or falls off the edge of the vehicle seat.

Note: *Always adjust the front passenger seat to its fully rearward position. If it proves difficult to achieve seat belt routing according to the child restraint system instructions, adjust the seat backrest and move the seat only as far forward as necessary.*

After installing a child restraint system, push and pull the system forward and back and side-to-side to verify it is secure.

Read and follow the instructions provided by the child restraint manufacturer. If you have any doubts, contact the child restraint manufacturer.

Note: *Side curtain air bags will not interfere with a properly installed child restraint system or booster seat, because they are designed to inflate downward from the headliner above the doors along the side window openings.*

When a child restraint system is not being used, either remove it and store it in a safe place, or make sure it is properly secured. An unsecured child restraint system can be thrown around the vehicle in a crash or sudden stop and injure someone.

ISOFIX Anchor Points

WARNING: The ISOFIX lower anchorages must be used in conjunction with the upper (top tether) anchorages.

WARNING: Use an anti-rotation device when using the ISOFIX system. Failure to follow this instruction could result in personal injury or death.

Note: *When you are purchasing an ISOFIX seat, make sure that you know the correct mass group and ISOFIX size class for the intended seating locations.*

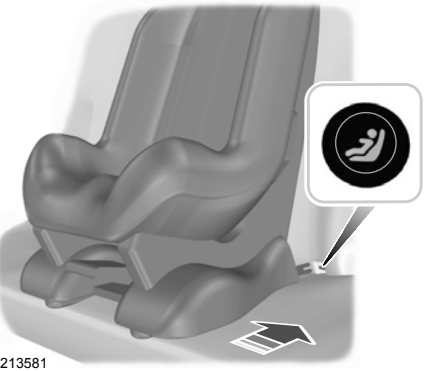

E213581

Your vehicle has ISOFIX anchor points that accommodate universally approved ISOFIX child restraints.

The ISOFIX system has two rigid attachment arms on the child restraint that attach to anchor points on the outermost second row seats, where the cushion and backrest meet. Tether anchor points are behind the outermost second-row seats for child restraints with a top tether.

Top Tether Anchor Points

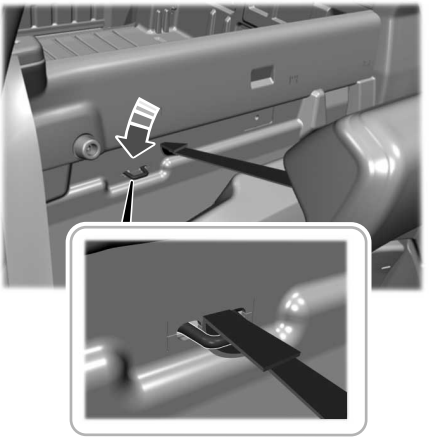

There are two child restraint anchor points on the second row seats, one for each outermost rear seating positions.

When installing the child restraint attaching clip to the anchor fitting, if necessary, raise the head restraint and pass the tether strap between the head restraint supports. This prevents the tether strap from falling off the outermost edge of the seating positions.

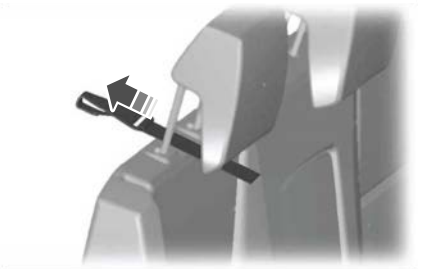

Attaching a Child Restraint with Top Tethers

WARNING: Do not attach a tether strap to anything other than the correct tether anchor point.

WARNING: Make sure that the top tether strap is not slack or twisted and is properly located on the anchor point.

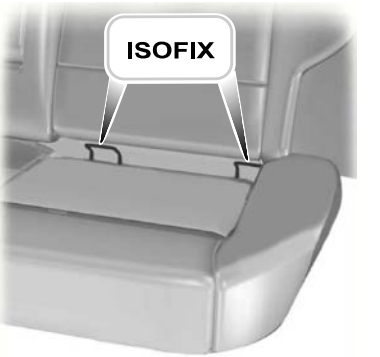

1. Push the child restraint back firmly to engage the ISOFIX lower anchor points.
2. Tighten the tether strap as described in the child restraint manufacturer's instructions.

USING SEATBELTS - RAPTOR

WARNING: EXTREME HAZARD! Do not use a rearward facing child restraint on a seat protected by an airbag in front of it!

WARNING: Incorrectly fitted child restraints may swing, tip or come away causing death or injury.

WARNING: Do not use a child restraint if the tether strap falls into a split in the vehicle seat back or falls off the edge of the vehicle seat.

Note: *Always adjust the front passenger seat to its fully rearward position. If it proves difficult to achieve seat belt routing according to the child restraint system instructions, adjust the seat backrest and move the seat only as far forward as necessary.*

After installing a child restraint system, push and pull the system forward and back and side-to-side to verify it is secure.

Read and follow the instructions provided by the child restraint manufacturer. If you have any doubts, contact the child restraint manufacturer.

Note: *Side curtain air bags will not interfere with a properly installed child restraint system or booster seat, because they are designed to inflate downward from the headliner above the doors along the side window openings.*

When a child restraint system is not being used, either remove it and store it in a safe place, or make sure it is properly secured. An unsecured child restraint system can be thrown around the vehicle in a crash or sudden stop and injure someone.

ISOFIX Anchor Points

WARNING: The ISOFIX lower anchorages must be used in conjunction with the upper (top tether) anchorages.

WARNING: Use an anti-rotation device when using the ISOFIX system. Failure to follow this instruction could result in personal injury or death.

Note: *When you are purchasing an ISOFIX seat, make sure that you know the correct mass group and ISOFIX size class for the intended seating locations.*

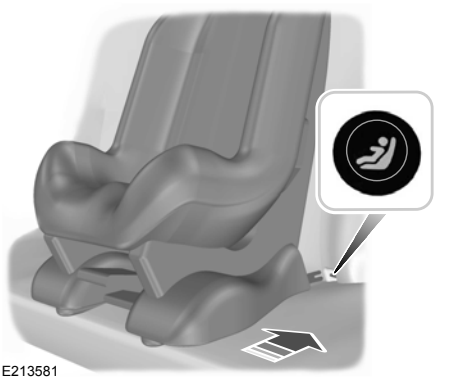

E213581

Your vehicle has ISOFIX anchor points that accommodate universally approved ISOFIX child restraints.

The ISOFIX system comprises two rigid attachment arms on the child restraint that attach to anchor points on the outermost second row seats, where the cushion and backrest meet. Tether anchor points are behind the outermost second row seats for child restraints with a top tether.

Top Tether Anchor Points

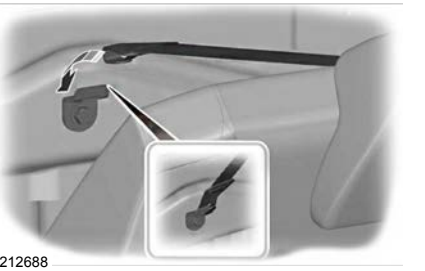

E212688

There are two child restraint anchor points on the second row seats, one for each outermost rear seating positions.

When installing the child restraint attaching clip to the anchor fitting, if necessary, raise the head restraint and pass the tether strap between the head restraint supports. This prevents the tether strap from falling off the outermost edge of the seating positions.

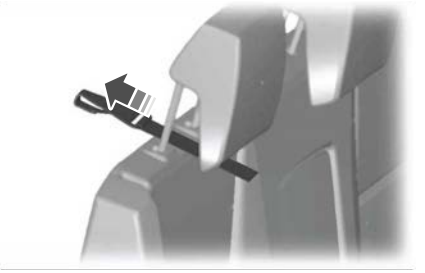

Attaching a Child Restraint with Top Tethers

WARNING: Do not attach a tether strap to anything other than the correct tether anchor point.

WARNING: Make sure that the top tether strap is not slack or twisted and is properly located on the anchor point.

1. Push the child restraint back firmly to engage the ISOFIX lower anchor points.
2. Tighten the tether strap as described in the child restraint manufacturer's instructions.

USING TETHER STRAPS - EXCLUDING: RAPTOR

WARNING: Child restraint anchorages are designed to withstand only those loads imposed by correctly fitted child restraints. Under no circumstances are they to be used for adult seatbelts, harnesses or for attaching other items or equipment to the vehicle.

WARNING: Always ensure that the locking mechanism of the rear seat back is fully engaged when in the upright position, by attempting to pull it down again.

WARNING: Make sure that the tether strap tightening mechanism remains accessible when the seatback is fully engaged in the catch.

There are two child restraint anchor fittings on the rear panel of the double cab, one behind each outermost seating position in the locations shown. Do not fit a child restraint to the center rear seat.

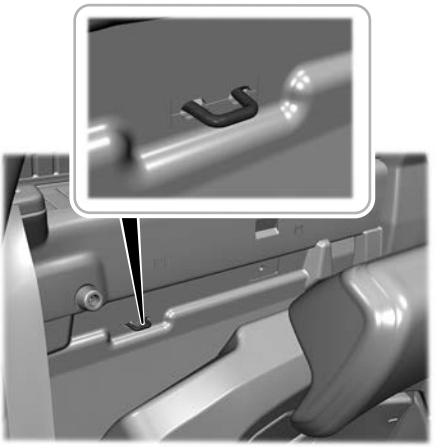

To access the child restraint anchor fittings, pull the release strap up and move the seat backrest forward. When returning the seat backrest to the upright position, make sure it is securely latched by moving it back and forth.

The following diagram shows the correct installation and orientation of the attaching clip and anchor fitting.

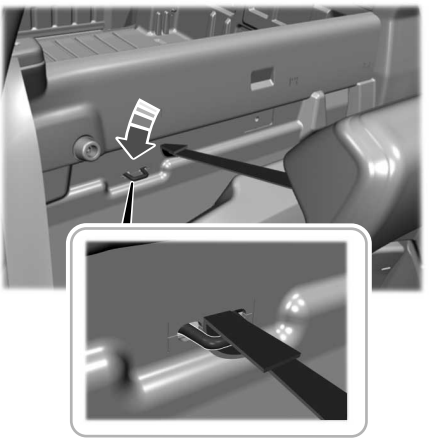

USING TETHER STRAPS - RAPTOR

WARNING: Child restraint anchorages are designed to withstand only those loads imposed by correctly fitted child restraints. Under no circumstances are they to be used for adult seatbelts, harnesses or for attaching other items or equipment to the vehicle.

WARNING: Always ensure that the locking mechanism of the rear seat back is fully engaged when in the upright position, by attempting to pull it down again.

WARNING: Make sure that the tether strap tightening mechanism remains accessible when the seatback is fully engaged in the catch.

There are two child restraint anchor fittings on the rear panel of the double cab, one behind each outermost seating position in the locations shown. Do not fit a child restraint to the center rear seat.

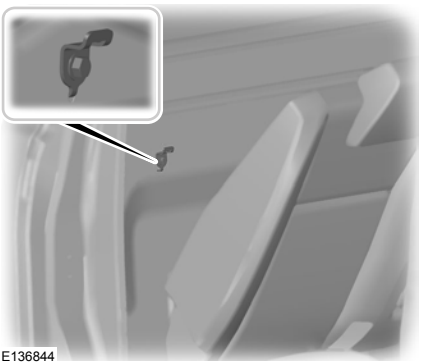
E136844

To access the child restraint anchor fittings, pull the release strap up and move the seat backrest forward. When returning the seat backrest to the upright position, make sure it is securely latched by moving it back and forth.

The following diagram shows the correct installation and orientation of the attaching clip and anchor fitting.

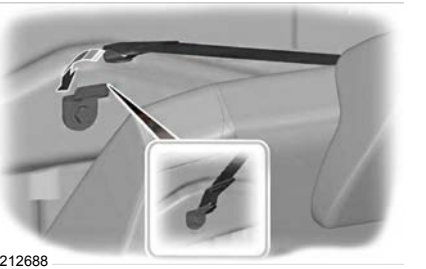
E212688

BOOSTER SEATS

Booster Seat

Secure children that weigh greater than 15 kg (33 lb) but are less than 150 cm (60 in) tall in a booster seat or on a booster cushion.

We recommend that you use a booster seat that combines a cushion with a backrest instead of a booster cushion only. The raised seating position will allow you to position the shoulder strap of the adult seatbelt over the center of your child's shoulder and the lap strap tightly across their hips.

Booster Cushion

WARNING: When using a booster cushion, make sure you adjust the vehicle head restraint on that seating position.

Secure children that weigh greater than 22 kg (49 lb) but are less than 150 cm (60 in) tall on a booster cushion.

CHILD SAFETY LOCKS - VEHICLES WITH: MECHANICAL CHILD PROOF LOCKS

WARNING: You cannot open the rear doors from inside if you have put the child safety locks on.

A child safety lock is on the rear edge of each rear door. You must switch the child safety lock separately on each door.

Left-Hand Side

Turn the key clockwise to switch the child lock on and counterclockwise to switch it off.

Right-Hand Side

Turn the key counterclockwise to switch the child lock on and clockwise to switch it off.

Note: *To make sure the child safety lock is on, pull the inside door handle twice to verify the door does not open.*

Note: *To open the rear doors from inside the vehicle when the child lock is engaged, roll down the rear window and use the outside door handle. Or have someone outside the vehicle open the door.*

CHILD SAFETY LOCKS - VEHICLES WITH: REMOTE CHILD PROOF LOCKS

WARNING: You cannot open the rear doors from inside if you have put the child safety locks on.

E259984

The child safety lock control is on the driver door.

Press the lock control to switch them on. Press again to switch them off.

Note: *You cannot use the rear power window switches if you have put the child safety locks on.*

Note: *If the LED flashes, the system has detected a fault that requires service. Have your vehicle checked as soon as possible.*

SEATBELT PRECAUTIONS

WARNING: Make sure that the seatbelts are securely stowed away when not in use and not outside your vehicle when closing the doors.

FASTENING AND UNFASTENING THE SEATBELTS

Fastening the Seatbelts

All seatbelts in your vehicle are a three-point combination lap and shoulder seatbelt.

A Seatbelt tongue.
B Seatbelt buckle.

1. Pull the seatbelt out steadily.

Note: *It may lock if you pull it sharply or if the vehicle is on a slope.*

2. Insert the tongue into the buckle.
3. Pull the seatbelt tight to remove any slack.

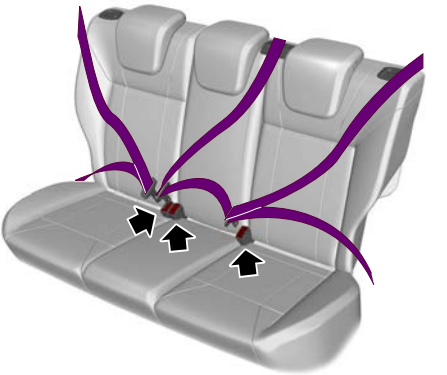

The second row center seatbelt can lock if you forcefully return the seat backrest from a folded position to the upright position. If the seatbelt locks, recline the seat using the recline adjustment.

Unfastening the Seatbelts

1. Press the red button on the buckle to release the seatbelt.
2. Hold the seatbelt tongue and let it retract completely and smoothly to its stowed position.

ADJUSTING THE SEATBELTS DURING PREGNANCY

WARNING: Position the seatbelt correctly for your safety and that of your unborn child. Do not use only the lap strap or the shoulder strap.

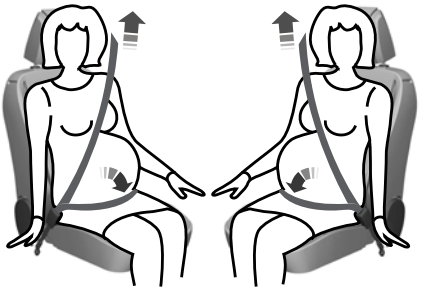

Pregnant women should always wear their seatbelt. The lap belt portion of a combination lap and shoulder belt should be positioned low across the hips below the belly and worn as tight as comfort will allow. The shoulder belt portion of a combination lap and shoulder belt should be positioned to cross the middle of the shoulder and the center of the chest.

SEATBELT REMINDER

SEATBELT REMINDER INDICATORS

A warning lamp illuminates if the ignition is on, a front seat is occupied and the seatbelt has not been fastened.

A warning lamp illuminates when your vehicle exceeds a relatively low speed, and a rear seatbelt has been unfastened.

The warning lamp illuminates until all occupants fasten their seatbelt.

SEATBELT REMINDER AUDIBLE WARNINGS

A warning tone sounds and the warning lamp illuminates if you are not wearing your seatbelt when your vehicle exceeds a relatively low speed.

The warning tone sounds for a short period of time or until you fasten your seatbelt.

SWITCHING THE SEATBELT REMINDER ON AND OFF

Contact an authorized dealer.

CHECKING SEATBELT STATUS

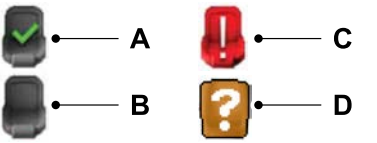

A Seatbelt fastened.

B Seatbelt not fastened.

C Seatbelt not fastened or seatbelt recently unfastened.

D Fault.

Checking Seatbelt Status

1. Press the menu button on the steering wheel to enter the instrument cluster main menu.
2. Press Select Screens.
3. Select Seatbelts.

CHECKING THE SEATBELTS

Check the seatbelts and child restraints periodically to make sure they work properly and are not damaged. Make sure there are no nicks, tears or cuts. Replace if necessary.

Check the following seatbelt assemblies after a crash.

Ranger (TRA, TRB) Vehicles Built From: 01-11-2024, CG4010en enGBR, Edition date: 202407, DOM

- Retractors.
- Buckles.
- Shoulder belt guide on seat backrest.
- Child restraint anchors.
- Attaching hardware.

Read the child restraint manufacturer's instructions for additional inspection and maintenance information specific to the child restraint.

We recommend that all seatbelt assemblies in use in vehicles involved in a crash be replaced. However, if the crash was minor and an authorized dealer finds that the belts do not show damage and continue to operate properly, they do not need to be replaced. Seatbelt assemblies not in use during a crash should also be checked and replaced if either damage or improper operation is noted.

Seatbelts – Information Messages

Message	Description
Rear belt monitor malfunction Service required	The system has detected a fault that requires service. Have your vehicle checked as soon as possible.

HOW DO THE FRONT AIRBAGS WORK

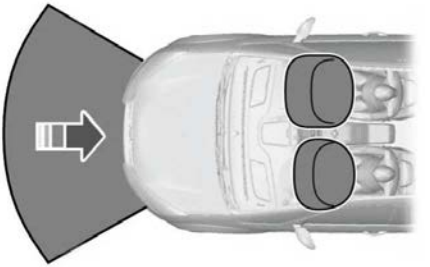

The front airbags are designed to deploy during a significant frontal or near-frontal crash. The airbags inflate within a few thousandths of a second cushioning forward body movement and deflate on contact with the occupant. The front airbags are not designed to deploy during a minor frontal crash, rear crash, side crash or a vehicle rollover.

HOW DO THE SIDE AIRBAGS WORK

WARNING: Do not place objects or mount equipment on or near the headliner at the siderail that may come into contact with a deploying curtain airbag. Failure to follow these instructions may increase the risk of personal injury in the event of a crash.

WARNING: Do not lean your head on the door. The side airbag could injure you as it deploys from the side of the seatback.

WARNING: Accessory seat covers not released by Ford Motor Company could prevent the deployment of the airbags and increase the risk of injuries in a crash.

WARNING: Do not attempt to service, repair, or modify the supplementary restraint system or associated components. Failure to follow this instruction could result in personal injury or death.

WARNING: If a supplementary restraint system component has deployed, it will not function again. Have the system and associated components inspected as soon as possible. Failure to follow this instruction could result in personal injury or death.

The side airbags are on the outermost side of each front seat backrest. There is a label attached to the side of each backrest to indicate this.

The side airbags are designed to inflate between the door panel and the occupant to enhance the protection in certain crashes.

The side airbags are designed to deploy during a significant lateral crash. They could also deploy during a significant frontal crash. The side airbags are not designed to deploy during a minor lateral or frontal crash, rear crash or a vehicle rollover.

HOW DO THE KNEE AIRBAGS WORK

WARNING: Do not attempt to open the airbag cover.

The driver knee airbag deploys during significant frontal and near frontal crashes that are up to 30° from the left or the right. The airbag inflates within a few thousandths of a second and deflates on contact with the occupants, thus providing a cushion between the driver's knees and the steering column. During overturns, rear crashes and side crashes, the knee airbag will not deploy.

Note: *The airbag has a lower deployment threshold than the front airbags. During a minor crash, it is possible that only the knee airbag deploys.*

HOW DO THE SIDE CURTAIN AIRBAGS WORK

WARNING: Do not place objects or mount equipment on or near the headliner at the siderail that may come into contact with a deploying curtain airbag. Failure to follow these instructions may increase the risk of personal injury in the event of a crash.

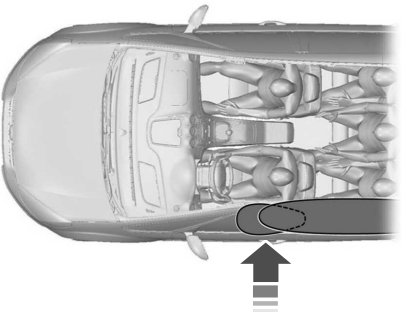

The airbags are above the front and rear side windows.

The airbags are designed to deploy during a significant lateral or frontal angled crash. The airbags are not designed to deploy during a minor lateral and frontal crash, rear crash or a vehicle rollover .

AIRBAG PRECAUTIONS

WARNING: Extreme Hazard! Never use a rearward facing child restraint on a seat protected by an active airbag in front of it. Death or serious injury to the child can occur.

WARNING: Do not modify the front of your vehicle in any way. This could adversely affect deployment of the airbags. Failure to adhere to this warning could result in serious personal injury or death.

WARNING: Wear a seatbelt and keep sufficient distance between yourself and the steering wheel. Only when you use the seatbelt correctly, can it hold you in a position that allows the airbag to achieve its optimum effect. Failure to adhere to this warning could result in serious personal injury or death.

WARNING: Repairs to the steering wheel, steering column, seats, airbags and seatbelts must be carried out by an authorized dealer. Failure to adhere to this warning could result in serious personal injury or death.

WARNING: Keep the areas in front of the airbags free from obstruction. Do not affix anything to or over the airbag covers. Objects could become projectiles during airbag deployment. Failure to follow this instruction could result in personal injury or death.

WARNING: Do not poke sharp objects into areas where airbags are fitted. This could damage and adversely affect deployment of the airbags. Failure to follow this instruction could result in personal injury or death.

WARNING: Accessory seat covers not released by Ford Motor Company could prevent the deployment of the airbags and increase the risk of injuries in a crash.

WARNING: Do not attempt to service, repair, or modify the supplementary restraint system or associated components. Failure to follow this instruction could result in personal injury or death.

WARNING: If a supplementary restraint system component has deployed, it will not function again. Have the system and associated components inspected as soon as possible. Failure to follow this instruction could result in personal injury or death.

Note: *A loud bang sounds and there is a cloud of harmless powdery residue if an airbag deploys. This is normal.*

FRONT PASSENGER SENSING SYSTEM

WHAT IS THE FRONT PASSENGER SENSING SYSTEM

This system detects a properly seated occupant and determines if the front passenger airbag should be enabled.

HOW DOES THE FRONT PASSENGER SENSING SYSTEM WORK

The system uses a passenger airbag status indicator which illuminates indicating that the front passenger frontal airbag is either enabled or disabled.

Ranger (TRA, TRB) Vehicles Built From: 01-11-2024, CG4010en enGBR, Edition date: 202407, DOM

Note: *When you first switch the ignition on, the passenger airbag status indicator off and on lamps illuminate for a short period to confirm they are functional.*

The indicator lamps are in the center of the instrument panel.

The front passenger sensing system is designed to disable the front passenger frontal airbag and knee airbag under these conditions:

- The front passenger seat is unoccupied.
- The system determines an infant is present in a child restraint.
- A passenger takes their weight off of the seat for a period of time.
- If there is a problem with the airbag system or the passenger sensing system.

Even with this technology, parents are strongly encouraged to always properly restrain children in the rear seat.

- When the front passenger sensing system disables the front passenger frontal airbag and knee airbag, the passenger airbag status indicator illuminates the off lamp.
- If you have installed the child restraint and the passenger airbag status indicator illuminates the on lamp, switch your vehicle off, remove the child restraint from your vehicle and reinstall the restraint following the child restraint manufacturer's instructions.
- After you have installed a rearward facing child restraint, make sure the passenger airbag indicator off illuminates. If the passenger airbag indicator on illuminates, remove the rearward-facing child restraint from the front passenger seat.

The front passenger sensing system works with sensors that are part of the front passenger seat and seatbelt. The sensors are designed to detect the presence of a properly seated occupant and determine if the front passenger frontal airbag should be enabled.

- When the front passenger sensing system enables the front passenger frontal airbag and knee airbag, the passenger airbag status indicator illuminates the on lamp.

If a person of adult size is sitting in the front passenger seat, but the passenger airbag status indicator off lamp is illuminated, it is possible that the person is not sitting properly in the seat. If this happens:

- Switch your vehicle off and ask the person to place the seat backrest in an upright position.
- Have the person sit upright in the seat, centered on the seat cushion, with the person's legs comfortably extended.

- Restart your vehicle and have the person remain in this position for about two minutes. This allows the system to detect that person and enable the passenger frontal airbag and knee airbag.
- If the indicator off lamp remains illuminated even after this, you should advise the person to ride in the rear seat.

After all occupants have adjusted their seats and put on seatbelts, it is very important that they continue to sit upright, leaning against the seat backrest, and centered on the seat cushion, with their feet comfortably extended on the floor.

Sitting improperly can increase the chance of injury in a crash event. For example, if an occupant slouches, lies down, turns sideways, sits forward, leans forward or sideways, or puts one or both feet up, the chance of injury during a crash greatly increases.

If you think that the state of the passenger airbag status indicator lamp is incorrect, check for the following:

- Objects lodged underneath the seat.
- Objects between the seat cushion and the center console.
- Objects hanging off the seat backrest.
- Objects stowed in the seat backrest map pocket.
- Objects placed on the occupant's lap.
- Cargo interference with the seat
- Other passengers pushing or pulling on the seat.
- Rear passenger feet and knees resting or pushing on the seat.

The listed conditions could cause the weight of a properly seated occupant to be incorrectly interpreted by the front passenger sensing system. The person in the front passenger seat could appear heavier or lighter due to the conditions listed.

Make sure the front passenger sensing system is operating properly.

If the airbag readiness light is on, do the following:

- Pull your vehicle over.
- Switch your vehicle off.
- Check for any objects lodged underneath the front passenger seat or cargo interfering with the seat.
- Remove the obstruction if found.
- Restart your vehicle.
- Wait at least two minutes and verify that the airbag readiness light in the instrument cluster is no longer illuminated.
- If the airbag readiness light in the instrument cluster remains illuminated, there may be a problem due to the front passenger sensing system.

Do not attempt to repair or service the system. Take your vehicle in for service immediately.

If it is necessary to modify an advanced front airbag system to accommodate a person with disabilities, contact your Customer Relationship Center.

FRONT PASSENGER SENSING SYSTEM PRECAUTIONS

WARNING: NEVER use a rearward facing child restraint on a seat protected by an ACTIVE AIRBAG in front of it, DEATH or SERIOUS INJURY to the CHILD can occur.

WARNING: Even with Advanced Restraints Systems, the rear seats are the safest place for children.

WARNING: Sitting improperly, out of position or with the seatback reclined too far can take weight off the seat cushion and affect the decision of the passenger sensing system, resulting in serious injury or death in the event of a crash. Always sit upright against your seat back, with your feet on the floor.

WARNING: Do not stow objects in the seatback map pocket or hang objects off a seatback if a child is in the front passenger seat. Do not place objects under the front passenger seat or between the seat and the center console. Check the passenger airbag indicator lamp for proper airbag status. Failure to follow these instructions may interfere with the front passenger seat sensing system and increase the risk of serious injury.

WARNING: Any alteration or modification to the front passenger seat may affect the performance of the front passenger sensing system. This could seriously increase the risk of injury or death.

FRONT PASSENGER SENSING SYSTEM INDICATORS

Occupant	Passenger Airbag Status Indicator	Passenger Airbag
Empty	OFF: Illuminated	Disabled
	ON: Not Illuminated	
Child	OFF: Illuminated	Disabled
	ON: Not Illuminated	
Adult	OFF: Not Illuminated	Enabled
	ON: Illuminated	

WHAT IS ECALL

eCall is an emergency call system that complies with European Union Regulation (EU) 2015/758. See **eCall User Information** (page 711).

The system uses the public cell phone network to initiate a call to the public emergency services when activated automatically in a severe accident or manually by the vehicle occupants.

eCall is designed for emergency calls in case of severe accidents or other emergencies that require the emergency services. It does not support other voice calls.

HOW DOES ECALL WORK

If an accident results in an attempt to deploy an airbag, excluding knee airbags and rear inflatable seatbelts, or to shut off the fuel pump, or to deactivate the high voltage battery, the system initiates a call to the emergency services. This call cannot be canceled.

In the case of an emergency, the system, as a means of communication aid, can help you contact specific rescue departments of public emergency services. The system does not deploy the rescue operations. The local public emergency service deploys specific rescue operations according to the actual situation.

During an emergency call, the system transmits vehicle data to the emergency service. See **Emergency Call System Data** (page 30).

Note: *If the transmission is unsuccessful, this could result in the emergency operator not receiving your vehicle data.*

Note: *If the system is unable to initiate a call to the emergency services, a voice prompt plays and the emergency call indicator illuminates.*

EMERGENCY CALL REQUIREMENTS

The system only operates in areas with a compatible cell phone network and emergency services infrastructure.

EMERGENCY CALL LIMITATIONS

Not all accidents activate the system. If an accident does trigger the system, it initiates a call to the emergency services. Do not wait for the system to initiate a call if you are able to do so. Call emergency services immediately to avoid a delayed response time. If you do not hear the system within five seconds of the accident, the system could be non-functional.

Using a non-Ford audio system could result in the system not properly operating.

MANUALLY MAKING AN EMERGENCY CALL

WARNING: Use caution when making a manual emergency call when driving.

1. Switch the ignition on.
2. Press the SOS symbol on the overhead console to open the emergency call button cover.

Ranger (TRA, TRB) Vehicles Built From: 01-11-2024, CG4010en enGBR, Edition date: 202407, DOM

3. Press the emergency call button to initiate a call to the emergency services.

Note: *Press the button again before the call is connected to cancel it.*

4. Speak to the operator.

Note: *After completing an emergency call, the emergency operator can call your vehicle. The system automatically answers incoming calls for approximately an hour.*

EMERGENCY CALL INDICATORS

WARNING: If the system malfunctions, have your vehicle checked as soon as possible.

The indicator is integrated into the emergency call button cover on the overhead console.

It illuminates brightly for a short time when you switch the ignition on.

Emergency Call Indicator Status	Description
Indicator off.	The system has malfunctioned. Have your vehicle checked as soon as possible.
Dimmed red.	Normal operation.
Rapidly flashing.	The system is initiating an emergency call.
Moderately flashing.	The system is transmitting vehicle data to the emergency services.
Slowly flashing.	The system is connected to the emergency services and communication is established.
Bright red.	The system has malfunctioned. Have your vehicle checked as soon as possible.

Ranger (TRA, TRB) Vehicles Built From: 01-11-2024, CG4010en enGBR, Edition date: 202407, DOM

CHANGING THE BACKUP BATTERY

The system has a backup battery and indicates when it needs to be changed. We recommend that you have the battery changed by an authorized dealer.

ECALL – TROUBLESHOOTING

ECALL – INFORMATION MESSAGES

Message	Description
Emergency Call System malfunction	The system has malfunctioned. Have your vehicle checked as soon as possible.

Ranger (TRA, TRB) Vehicles Built From: 01-11-2024, CG4010en enGBR, Edition date: 202407, DOM

REMOTE CONTROL LIMITATIONS

The typical operating range for your remote control is approximately 10 m (33 ft).

A decrease in operating range could be caused by:

- Weather conditions.
- Nearby radio towers.
- Structures around your vehicle.
- Other vehicles parked next to your vehicle.

The radio frequency used by your remote control can also be used by other short distance radio transmissions, for example amateur radios, medical equipment, wireless headphones, remote controls and alarm systems. If the frequencies are jammed, you will not be able to use your remote control. You can lock and unlock the doors with the key.

Note: *Make sure you have locked your vehicle before leaving it unattended.*

Note: *If you are within range of your vehicle, the remote control will operate if you unintentionally press any button.*

Note: *The remote control contains sensitive electrical components. Exposure to moisture or impact may cause permanent damage.*

USING THE REMOTE CONTROL

WARNING: Do not leave a key or remote control unattended in the vehicle. Children or pets could operate the power windows, moonroof or other controls. Failure to follow this instruction could result in personal injury or death.

Use your remote control to access various vehicle systems.

Note: *The buttons on your remote may vary depending on the vehicle region or options.*

Unlock

Press the button to unlock all doors. See **Unlocking and Locking the Doors Using the Remote Control** (page 80).

Lock

Press the button to lock all doors. See **Unlocking and Locking the Doors Using the Remote Control** (page 80).

Panic Alarm

Press the button to sound the panic alarm. See **Sounding the Panic Alarm** (page 73).

OPENING AND CLOSING THE FLIP KEY - VEHICLES WITH: REMOTE FLIP KEY

Opening Your Flip Key

Press the round button on the remote control to extend the flip key.

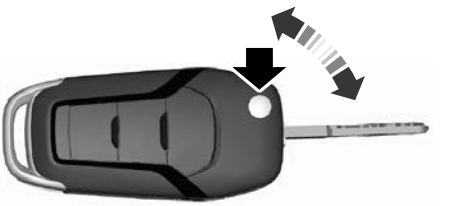

Note: *Inspect the key blade for debris. Periodically clean with a brush.*

Closing Your Flip Key

Press and hold the round button on the remote control to fold the key blade when not in use.

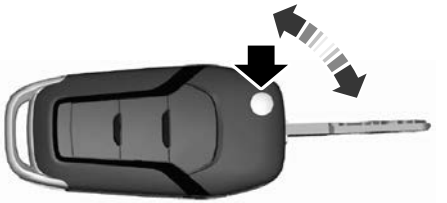

REMOVING THE KEY BLADE - VEHICLES WITH: PUSH BUTTON START

Push the release button on your passive key and pull the key blade out.

SOUNDING THE PANIC ALARM

Press the button to sound the panic alarm. Press the button again or switch the ignition on to turn it off.

Note: *The panic alarm only operates when the ignition is off.*

LOCATING YOUR VEHICLE

Press the lock button twice within three seconds. The turn signal lamps flash.

Note: *We recommend you use this method to locate your vehicle.*

CHANGING THE REMOTE CONTROL BATTERY - VEHICLES WITH: PUSH BUTTON START

WARNING: Keep batteries away from children to prevent ingestion. Failure to follow this instruction could result in personal injury or death. If ingested, immediately seek medical attention.

WARNING: If the battery compartment does not securely close, stop using the remote control and replace it as soon as possible. In the meantime, keep the remote control away from children. Failure to follow this instruction could result in personal injury or death.

The remote control uses one coin-type 3-volt lithium battery CR2450 or equivalent.

1. Push the release button and pull the key blade out.

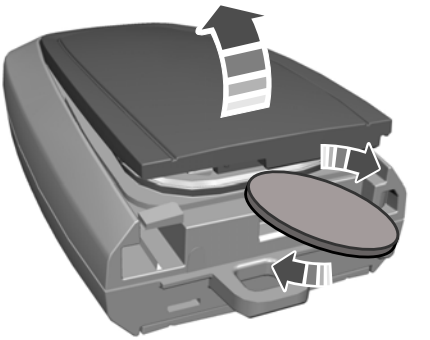

2. Twist a thin coin under the tab hidden behind the key blade head to remove the battery cover.

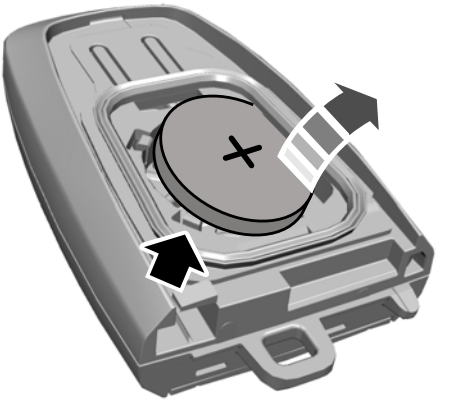

3. Insert a screwdriver, and carefully remove the battery.
4. Install a new battery with the **+** facing upward.
5. Reinstall the battery housing cover onto the transmitter and install the key blade.

Dispose of old batteries in an environmentally friendly way. Seek advice from your local authority about recycling old batteries.

Note: *Do not wipe off any grease on the battery terminals or on the back surface of the circuit board.*

Note: *Replacing the battery does not erase the programmed key from your vehicle. The remote control should operate normally.*

CHANGING THE REMOTE CONTROL BATTERY - VEHICLES WITH: FLIP KEY

WARNING: Keep batteries away from children to prevent ingestion. Failure to follow this instruction could result in personal injury or death. If ingested, immediately seek medical attention.

WARNING: If the battery compartment does not securely close, stop using the remote control and replace it as soon as possible. In the meantime, keep the remote control away from children. Failure to follow this instruction could result in personal injury or death.

Battery Replacement Procedure

The remote control uses one coin-type 3-volt lithium battery CR2032 or equivalent.

Press the button to release the key blade before beginning the procedure.

1. Insert a screwdriver, in the position shown and gently push the clip.
2. Press the clip down to release the battery cover.

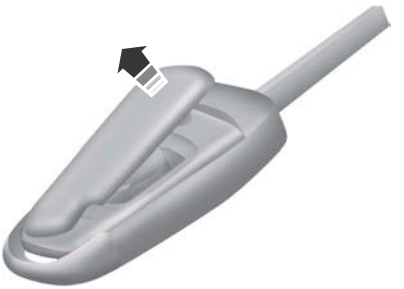

3. Carefully remove the cover.

4. Insert a screwdriver as shown to release the battery.

Note: *Do not touch the battery contacts or the printed circuit board with the screwdriver.*

5. Remove the battery.
6. Install a new battery with the + facing up.
7. Replace the battery cover.

Dispose of old batteries in an environmentally friendly way. Seek advice from your local authority about recycling old batteries.

Note: *Do not wipe off any grease on the battery terminals or on the back surface of the circuit board.*

Note: *Replacing the battery does not erase the programmed key from your vehicle. The remote control should operate normally.*

REPLACING A LOST KEY OR REMOTE CONTROL

You can purchase replacement keys or remote controls from an authorized dealer. Authorized dealers can program remote controls for your vehicle.

Note: *Your vehicle keys came with a security label that provides important key cut information. Keep the label in a safe place for future reference.*

PROGRAMMING THE REMOTE CONTROL - VEHICLES WITH: PUSH BUTTON START

You must have two previously programmed remote controls inside your vehicle and the new, unprogrammed remote controls readily accessible. Contact an authorized dealer to have the spare remote control programmed if two previously programmed remote controls are not available. Make sure that your vehicle is off before beginning this procedure.

Make sure that you close all the doors before beginning and that they remain closed throughout the procedure. Perform all steps within 30 seconds of starting the sequence. Stop and wait for at least one minute before starting again if you perform any steps out of sequence.

Note: *You can program a maximum of four remote controls to your vehicle.*

Note: *If your programmed remote controls get lost or stolen and you do not have an extra coded remote, you need to have your vehicle towed to an authorized dealer. Store an extra programmed remote away from your vehicle in a safe place to help prevent any inconvenience. Contact an authorized dealer to purchase additional spare or replacement remote controls.*

Read and understand the entire procedure before you begin.

1. Place the first programmed remote in the backup slot. See **Accessing the Passive Key Backup Position** (page 193). With your foot off the brake pedal, press and release the push button ignition switch.
2. Wait five seconds and then press and release the push button ignition switch again.
3. Remove the remote control.
4. Within 10 seconds, place a second programmed remote control in the backup slot. Press and release the push button ignition switch.
5. Wait five seconds and then press and release the push button ignition switch again. Keep the ignition on for at least 3 seconds, but no more than 10 seconds.
6. Remove the remote control.
7. Place the unprogrammed remote control in the backup slot and press and release the push button ignition switch.

Programming is now complete. With your foot on the brake pedal, press the push button ignition switch to verify the remote control functions operate and your vehicle starts with the new remote control.

If programming was not successful, wait 10 seconds and repeat Steps 1 through 7. If you are still unsuccessful, take your vehicle to an authorized dealer.

PROGRAMMING THE REMOTE CONTROL - VEHICLES WITH: FLIP KEY

General Information

You can program your own remote control to your vehicle. This procedure programs both the engine immobilizer keycode and the remote entry portion of the remote control to your vehicle.

Only use remote controls with an integrated mechanical key.

You must have two previously programmed remote controls and the new unprogrammed remote readily accessible. Contact an authorized dealer to have the spare remote control programmed if the two previously programmed remote controls are not available.

Ranger (TRA, TRB) Vehicles Built From: 01-11-2024, CG4010en enGBR, Edition date: 202407, DOM

Read and understand the entire procedure before you begin.

Steps for Programming Your Spare Remote Control

1. Insert the first previously programmed key into the ignition.
2. Switch the ignition from off to on. Keep the ignition on for at least three seconds, but no more than 10 seconds.
3. Switch the ignition off and remove the first previously programmed key from the ignition.
4. After three seconds but within 10 seconds of switching the ignition off, insert the second previously programmed key into the ignition.
5. Switch the ignition from off to on. Keep the ignition on for at least three seconds, but no more than 10 seconds.
6. Switch the ignition off and remove the second previously programmed key from the ignition.
7. After three seconds but within 10 seconds of switching the ignition off and removing the previously programmed key, insert the new unprogrammed key into the ignition.
8. Switch the ignition from off to on. Keep the ignition on for at least six seconds until you hear the door locks cycle.
9. Remove the newly programmed key from the ignition.

The key starts the engine if programming is successful. You can operate the keyless remote entry system with the new remote control with integrated key.

If programming is not successful, wait 20 seconds and repeat steps 1 through 8. If you are still unsuccessful, take your vehicle to an authorized dealer.

Note: *You can program a maximum of six remote controls to your vehicle.*

USING THE VALET MODE

What is Valet Mode

The valet mode allows you to limit the access of these features:

- Audio system.
- Voice interaction.
- Phone.
- Navigation.
- Memory function (if equipped).

Valet Mode Limitations

Make sure your vehicle is on and the remote control is inside the vehicle.

The system does not function if any of the following occur:

- The vehicle speed is greater than 8km/h.
- The vehicle is not in park (P) for automatic transmission or in neutral (N) for manual transmission.

Enabling Classic Valet Mode

Make sure the remote control is in your vehicle.

1. From the settings menu, press Valet Mode. See **Center Display** (page 599).
2. Enter a four digit code to lock the touchscreen.
3. Re-enter the same four digit code to complete enabling valet mode.

Disabling Classic Valet Mode

1. Press Exit Valet Mode.
2. Enter your four digit code to disable valet mode and unlock the touchscreen.

KEYS AND REMOTE CONTROLS – TROUBLESHOOTING

KEYS AND REMOTE CONTROLS – INFORMATION MESSAGES

Message	Action
Key battery low Replace soon	Replace remote control battery.

Ranger (TRA, TRB) Vehicles Built From: 01-11-2024, CG4010en enGBR, Edition date: 202407, DOM

OPERATING THE DOORS FROM OUTSIDE YOUR VEHICLE

UNLOCKING AND LOCKING THE DOORS USING THE REMOTE CONTROL

You can only use the remote control when your vehicle is stationary.

Unlocking the Doors

Press the button to unlock all doors.

Locking the Doors

Press the button to lock all doors. One short flash of the turn signal lamps confirms that your vehicle has locked.

You can also use the remote control to lock or unlock the tailgate if your vehicle comes with a power tailgate lock. See **Locking and Unlocking the Tailgate** (page 87).

Note: *For more information on operating the doors from outside your vehicle See **Keyless Entry** (page 84).*

UNLOCKING AND LOCKING THE DOORS USING THE KEY BLADE

If there is a power door lock fault you can use the key blade to lock and unlock the doors.

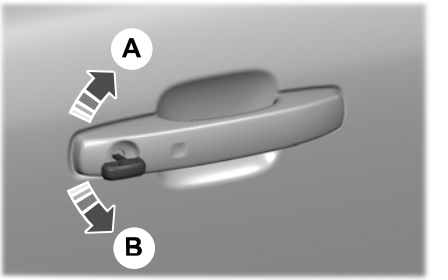

A Lock.
B Unlock.

DOUBLE LOCKING THE DOORS USING THE REMOTE CONTROL

WARNING: Do not use double locking when passengers or animals are inside your vehicle. The doors cannot be unlocked or opened from the inside when double locked.

Double locking is a theft protection feature that prevents someone from opening the doors from the inside. You can only double lock the doors if all the doors are closed.

Press the button twice within three seconds. Three short flashes of the direction indicators confirm that your vehicle has double locked.

DOUBLE LOCKING THE DOORS USING THE KEY BLADE

1. Turn the top of the key toward the front of your vehicle twice within three seconds.

Ranger (TRA, TRB) Vehicles Built From: 01-11-2024, CG4010en enGBR, Edition date: 202407, DOM

OPERATING THE DOORS FROM INSIDE YOUR VEHICLE

UNLOCKING AND LOCKING THE DOORS USING THE CENTRAL LOCKING

The power door lock control is on the front doors.

Press the button to unlock all doors.

Press the button to lock all doors.

Note: *The central locking only operates if the front doors are fully closed.*

OPENING THE DOORS FROM INSIDE YOUR VEHICLE

Pull the interior door handle to unlock and open a door.

AUTOUNLOCK

WHAT IS AUTOUNLOCK

Autounlock is a feature that centrally unlocks the vehicle doors when your vehicle comes to a stop and you open the driver door.

AUTOUNLOCK REQUIREMENTS

Autounlock unlocks all the doors after:

1. The vehicle speed exceeds 20 km/h (12 mph).
2. Your vehicle comes to a stop.
3. You open the driver door.

Note: *Autounlock operates for only 10 minutes after the ignition is switched off.*

SWITCHING AUTOUNLOCK ON AND OFF

1. From the settings menu, press Vehicle. See **Center Display** (page 599).
2. Press Locks.
3. Switch Autounlock on or off.

MISLOCK

WHAT IS MISLOCK

Mislock is a locking feature that warns you if your vehicle has not locked.

MISLOCK LIMITATIONS

The turn signals will not flash when you press the lock button once and the hood or any door is open.

If you switch mislock off, the horn does not sound if you press the lock button on the remote control when a door is open.

SWITCHING MISLOCK ON AND OFF

1. From the settings menu, press Vehicle. See **Center Display** (page 599).
2. Press Locks.
3. Switch Mislock on or off.

AUTORELOCK

HOW DOES AUTORELOCK WORK

The doors automatically relock if you do not open a door within 45 seconds of unlocking the doors with the remote control. The door locks and the alarm return to their previous state.

Ranger (TRA, TRB) Vehicles Built From: 01-11-2024, CG4010en enGBR, Edition date: 202407, DOM

DOOR LOCK INDICATORS

An LED on the power door lock control illuminates when all doors are locked. It remains on for up to five minutes after you switch the ignition off.

DOORS AND LOCKS AUDIBLE WARNINGS

Door Ajar Audible Warning

Sounds when any front door is not fully closed and your vehicle is moving.

DOORS AND LOCKS – TROUBLESHOOTING

DOORS AND LOCKS – WARNING LAMPS

Door Ajar Warning Lamp

Illuminates when you switch the ignition on and remains on if any door or the hood is open.

DOORS AND LOCKS – INFORMATION MESSAGES

Message	Details
Driver door open	Displays if a door is open. Fully close the door.
Passenger door open	
Rear left door open	
Rear right door open	
Bonnet open	Displays if a hood is open. Fully close the hood.

DOORS AND LOCKS – FREQUENTLY ASKED QUESTIONS

Can accessories such as steps or handles be used with the latch assembly?

- Do not use the door latch assembly to attach any accessory, such as handles or steps, as this can cause damage to your vehicle.

Ranger (TRA, TRB) Vehicles Built From: 01-11-2024, CG4010en enGBR, Edition date: 202407, DOM

WHAT IS KEYLESS ENTRY

The system allows you to lock and unlock your vehicle without taking the passive key out of your pocket or purse.

KEYLESS ENTRY LIMITATIONS

Make sure your remote control is within 1 m (3 ft) from the front door handles.

The system could not function if:

- The remote control remains stationary for about a minute.
- The vehicle battery has no charge.
- The remote control battery has no charge.
- There is interference causing issues with the remote control frequencies.
- The remote control is too close to metal objects or electronic devices, for example keys or a cell phone.

KEYLESS ENTRY SETTINGS

Switching Keyless Entry On and Off

1. From the settings menu, press Vehicle Settings. See **Center Display** (page 599).
2. Press Locks.
3. Press KeyFree.

Reprogramming the Unlocking Function

You can enable the two-stage unlocking function allowing you to unlock only the driver door when you touch the unlock sensor.

Press and hold both the lock and unlock buttons on the remote control for four seconds to disable or enable two-stage unlocking.

This setting can also be modified in the vehicle Settings menu on the touchscreen, under Locks.

If you program the unlocking function so that only the driver door unlocks, you can unlock all of the other doors by pressing the unlock button on your remote or from inside your vehicle using the power door lock control. You can unlock individual doors by pulling the interior door handles on those doors.

Key Detection Alert

Displays a message in the instrument cluster if no valid key is detected, when you exit your vehicle with a key, after the last front door is closed and your keyless vehicle is in run, indicating your vehicle is still on. The horn sounds if you have driven the vehicle and reached a speed of 25 km/h (16 mph) and the above mentioned conditions are met.

You can switch the audible alert on or off.

1. From the settings menu, press Vehicle. See **Center Display** (page 599).
2. Switch Key Detection Alert On or Off.

USING KEYLESS ENTRY

Unlocking the Doors

With your passive key within 1 m (3 ft) of your vehicle, touch the unlock sensor on the back of the door handle for a brief period and then pull on the door handle to unlock, being careful not to touch the lock sensor at the same time or pull on the door handle too quickly. The intelligent access system requires a brief delay to authenticate your passive key.

Locking the Doors

With your passive key within 1 m (3 ft) of your vehicle, touch the outer door handle lock sensor for approximately one second to lock, being careful not to touch the unlock sensor on the back of the door handle at the same time. After locking, you can immediately pull on the door handle to confirm locking occurred without inadvertently unlocking.

KEYLESS ENTRY – TROUBLESHOOTING

KEYLESS ENTRY – FREQUENTLY ASKED QUESTIONS

Why does the keyless entry system not function?

- If the system does not function it may be limited. See **Keyless Entry Limitations** (page 84). If the system still does not function use the remote control or the key blade to lock and unlock your vehicle.

Why can I not lock my vehicle?

- If you electronically lock your vehicle with a rear door or the liftgate open, the system searches for a passive key inside your vehicle after you close the last door. If the system detects a key, all doors unlock indicating that a key is inside. Your vehicle locks if another passive key is within the detection range after you close the last door.

Ranger (TRA, TRB) Vehicles Built From: 01-11-2024, CG4010en enGBR, Edition date: 202407, DOM

HOW DOES EASY ENTRY AND EXIT WORK

This feature moves the driver seat rearward up to 5 cm (2 in) when you switch the ignition off. The driver seat returns to its previous position when you switch the ignition on.

SWITCHING EASY ENTRY AND EXIT ON AND OFF

1. From the settings menu, press Vehicle. See **Center Display** (page 599).
2. Press Easy Entry/Exit.

If you press any adjustment or memory button when in easy exit mode, the system cancels the operation.

Ranger (TRA, TRB) Vehicles Built From: 01-11-2024, CG4010en enGBR, Edition date: 202407, DOM

TAILGATE PRECAUTIONS

WARNING: It is extremely dangerous to ride in a cargo area, inside or outside of a vehicle. In a crash, people riding in these areas are more likely to be seriously injured or killed. Do not allow people to ride in any area of your vehicle that is not equipped with seats and seatbelts. Make sure everyone in your vehicle is in a seat and properly using a seatbelt. Failure to follow this warning could result in serious personal injury or death.

OPENING THE TAILGATE

OPENING THE TAILGATE FROM OUTSIDE YOUR VEHICLE

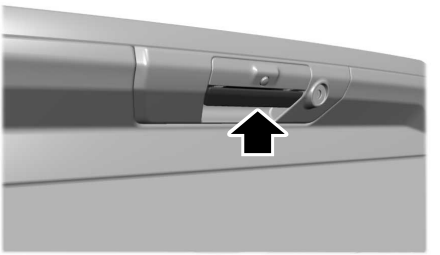

Pull up on the handle to release the tailgate.

Note: *You may need to unlock the tailgate first.*

LOCKING AND UNLOCKING THE TAILGATE

Manual

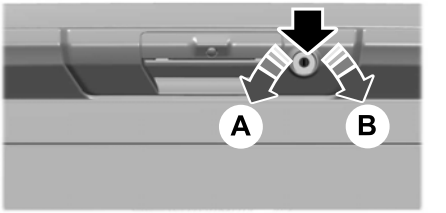

A Lock.

B Unlock.

1. Insert the ignition key into the tailgate lock.
2. Turn it to the left to lock the tailgate.
3. Turn it to the right to unlock the tailgate.

Power

You can lock and unlock the tailgate with the remote control or power door unlock control.

TAILGATE WORK SURFACE

The tailgate work surface is a durable and functional surface on the inside portion of your tailgate you can use to perform various tasks.

To use the tailgate work surface, fold down the tailgate.

Ranger (TRA, TRB) Vehicles Built From: 01-11-2024, CG4010en enGBR, Edition date: 202407, DOM

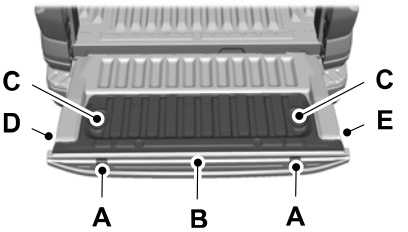

A Clamp pocket.
B Ruler.
C Cup holder.
D Bottle opener.
E Bag holder.

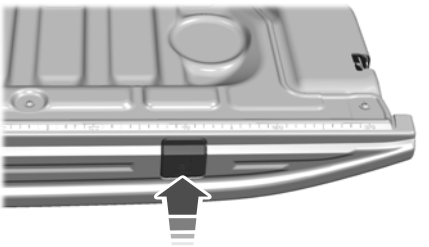

The tailgate work surface contains clamp pockets that allow you to secure work material.

Note: *Damage could occur to the tailgate if the vertical clamp arm is overloaded in any direction.*

Note: *Do not put more than 10 kg in the bag holder.*

Note: *When you have finished using the tailgate work surface, make sure you remove all of your belongings from the tailgate, then close the tailgate.*

Note: *Ruler is subject to thermal variations with measurement errors of ±5 mm (0.2 in).*

PASSIVE ANTI-THEFT SYSTEM

WHAT IS THE PASSIVE ANTI-THEFT SYSTEM

The passive anti-theft system prevents someone from starting your vehicle with an incorrectly coded key.

Note: *Do not leave a duplicate coded key in your vehicle. Always take the keys and lock all the doors when leaving your vehicle.*

HOW DOES THE PASSIVE ANTI-THEFT SYSTEM WORK

The passive anti-theft system arms when you switch your vehicle off.

It disarms when you switch your vehicle on with a correctly coded key.

Note: *The system is not compatible with non-Ford aftermarket remote start systems.*

Note: *Do not leave a duplicate coded key in your vehicle. Always take the keys and lock all doors when leaving your vehicle.*

ANTI-THEFT ALARM SYSTEM

WHAT IS THE ANTI-THEFT ALARM SYSTEM

The anti-theft alarm system warns you of an unauthorized entry to your vehicle.

HOW DOES THE ANTI-THEFT ALARM SYSTEM WORK

When armed, the anti-theft alarm is triggered in any of the following ways:

- If someone opens a door or the hood without a correctly coded key or remote control.
- If you turn the power on without a correctly coded key.
- If the interior sensors detect movement inside your vehicle.
- If the inclination sensors detect an attempt to raise your vehicle.
- If someone disconnects the vehicle battery or the battery backup alarm.

Any further attempts to carry out one of the above, sounds the alarm again.

If the anti-theft alarm is triggered, the alarm horn sounds for 30 seconds and the turn signals flash for five minutes.

WHAT IS THE PERIMETER ALARM

The perimeter alarm is designed to detect unauthorized access to your vehicle.

WHAT ARE THE INTERIOR SENSORS

The interior sensors are designed to detect any movement inside your vehicle.

The interior sensors are in the overhead console.

Note: *Do not cover the interior sensors.*

WHAT ARE THE INCLINATION SENSORS

The inclination sensor is designed to detect an attempt to raise your vehicle, for example to remove a wheel or to tow it away.

Ranger (TRA, TRB) Vehicles Built From: 01-11-2024, CG4010en enGBR, Edition date: 202407, DOM

WHAT IS THE BATTERY BACKUP ALARM

The battery backup alarm is an additional alarm sounder that has its own battery. It can detect if your vehicle's 12V battery is disconnected to overcome the alarm system.

ARMING THE ANTI-THEFT ALARM SYSTEM

The alarm is ready to arm when you switch your vehicle off.

Lock your vehicle with your remote control to arm the alarm.

DISARMING THE ANTI-THEFT ALARM SYSTEM

Disarm the alarm by performing any of the following actions:

- Unlock the doors or luggage compartment with the remote control.
- Switch your vehicle on or start your vehicle.

ANTI-THEFT ALARM SYSTEM SETTINGS

WHAT ARE THE ALARM SECURITY LEVELS

You can select two levels of alarm security, all sensors and perimeter sensing.

All Sensors

All sensors is the standard setting.

In all sensors, all equipped sensors are on when you arm the alarm.

Note: *Do not arm the alarm with full guard if passengers, animals or other moving objects are inside your vehicle or if you are transporting the vehicle as this could trigger the alarm.*

Perimeter Sensing

In perimeter sensing, the interior sensors are off when you arm the alarm.

All the other equipped sensors activate when you arm the alarm in this mode.

SETTING THE ALARM SECURITY LEVEL

1. From the settings menu, press Vehicle. See **Center Display** (page 599).
2. Press Alarm System.
3. Press Motion Sensors and choose a setting.

WHAT IS ASK ON EXIT

You can choose which level of security you require after you switch your vehicle off.

Note: *If you do not choose a setting, the system defaults to all sensors.*

SWITCHING ASK ON EXIT ON AND OFF

1. From the settings menu, press Vehicle. See **Center Display** (page 599).
2. Press Alarm System.
3. Press Ask on Exit.
4. Switch Ask on Exit on or off.

Ranger (TRA, TRB) Vehicles Built From: 01-11-2024, CG4010en enGBR, Edition date: 202407, DOM

SECURITY – TROUBLESHOOTING

SECURITY – INFORMATION MESSAGES

Message	Details
No key detected	The system has not detected a correctly coded key.
Starting system malfunction	The system has malfunctioned. Have your vehicle checked as soon as possible.
Vehicle alarm Start vehicle to stop alarm	Displays when the alarm has been triggered due to unauthorized entry.
Alarm system	

SECURITY – FREQUENTLY ASKED QUESTIONS

What should I do if there is a potential alarm problem with my vehicle?

- Take all remote controls to an authorized dealer if there is a potential alarm problem with your vehicle.

What should I do if my vehicle is unable to start with a correctly coded key?

- Have your vehicle checked as soon as possible.

ADJUSTING THE STEERING WHEEL

WARNING: Do not adjust the steering wheel when your vehicle is moving. Failure to follow this instruction could result in the loss of vehicle control, personal injury or death.

Note: *Make sure that you are sitting in the correct position. See* ***Sitting in the Correct Position*** *(page 155).*

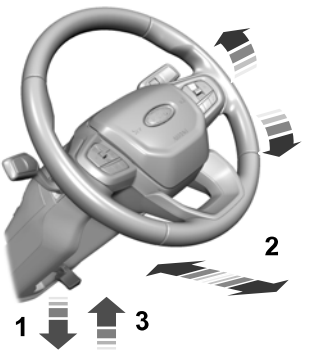

1. Unlock the steering column.
2. Adjust the steering wheel to the position you prefer.
3. Lock the steering column.

LOCKING THE STEERING WHEEL - VEHICLES WITHOUT: PUSH BUTTON START

1. Remove the key from the ignition.
2. Slightly rotate the steering wheel to engage the lock.

Unlocking the Steering Wheel

WARNING: Always check that the steering is unlocked before attempting to move your vehicle.

1. Insert the key in the ignition.
2. Turn the key to position ***I***.

Note: *You may have to slightly rotate the steering wheel to assist unlocking it.*

LOCKING THE STEERING WHEEL - VEHICLES WITH: PUSH BUTTON START

The steering wheel lock locks shortly after you have parked your vehicle and the passive key is outside it.

Note: *The steering wheel lock does not lock when the ignition is on or when your vehicle is moving.*

Unlocking the Steering Wheel

The steering wheel lock unlocks when the system detects a valid passive key inside your vehicle. If the steering wheel lock relocks, switch the ignition on to unlock it.

Note: *You may have to slightly rotate the steering wheel to assist unlocking it.*

HORN

Press on the center of the steering wheel near the horn icon to activate the horn.

Ranger (TRA, TRB) Vehicles Built From: 01-11-2024, CG4010en enGBR, Edition date: 202407, DOM

SWITCHING THE HEATED STEERING WHEEL ON AND OFF - VEHICLES WITH: HEATED STEERING WHEEL

WARNING: Use caution when using the heated steering wheel if you are unable to feel pain to your skin because of advanced age, chronic illness, diabetes, spinal cord injury, medication, exhaustion or other physical conditions. Failure to follow this instruction could result in personal injury, especially if the heated steering wheel is used for long periods of time.

To activate the heated steering wheel, press the button on the touchscreen near the climate controls. The button illuminates when the heated steering wheel is on. To turn it off, press the heated steering wheel button again.

Note: *The vehicle must be running to use the heated steering wheel.*

Note: *A sensor regulates the temperature of the steering wheel.*

Note: *Depending on the remote start settings, the heated steering wheel may remain on after remote starting your vehicle. It may also turn on when you start your vehicle if it was on the last time the engine was switched off.*

Note: *In warm temperatures, the steering wheel quickly reaches its maximum temperature and the system reduces the current to the heating element. This could cause you to think that the system has stopped working but it has not. This is normal.*

WIPERS

WIPER PRECAUTIONS

Do not operate the wipers on a dry windshield. This could scratch the glass or damage the wiper blades. Use the windshield washers before wiping a dry windshield.

Fully defrost the windshield before you switch the windshield wipers on.

Switch the windshield wipers off before entering a car wash.

Do not manually move the wiper arms for service activities.

Note: *For vehicles with a service position, make sure the windshield wipers are in this position before proceeding. To place the wiper arms in a service position, switch your vehicle on in accessory mode, switch on the wipers and switch your vehicle off when the wipers are at their highest position.*

SWITCHING WINDSHIELD WIPERS ON AND OFF

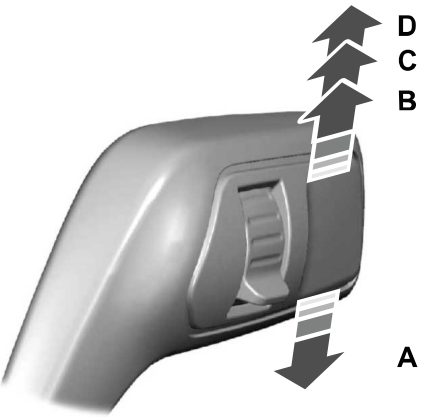

A Single wipe.
B Intermittent wipe/Auto wipe.
C Normal wipe.
D High-speed wipe.

Push the lever up or down to operate the windshield wipers.

AUTOWIPERS

WHAT ARE AUTOWIPERS

Autowipers turns on and controls the speed and frequency of the windshield wipers.

AUTOWIPERS SETTINGS

1. From the settings menu, press Vehicle. See **Center Display** (page 599).
2. Press Wipers.

3. Switch Rain sensing on or off.

Note: *When you switch the feature off, the wipers do not operate based on the rain sensor. When you switch on the windshield wipers to the intermittent wipe position with the feature off, the wipers use the wipe speed set by the rotary control.*

ADJUSTING THE SENSITIVITY OF THE RAIN SENSOR

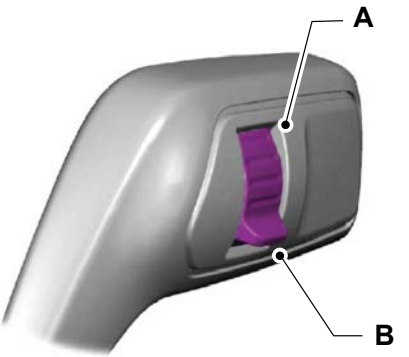

A High sensitivity.

B Low sensitivity.

Use the rotary control to set the rain sensor sensitivity.

When you select high sensitivity, the wipers operate when the sensor detects a small amount of water on the windshield.

When you select low sensitivity, the wipers operate when the sensor detects a large amount of water on the windshield.

CHECKING THE WIPER BLADES

Run the tip of your fingers over the edge of the blade to check for roughness.

REPLACING THE FRONT WIPER BLADES

Make sure your vehicle is off before beginning this procedure.

Note: *Do not manually move the wiper arms to service position, doing so may damage the wiper motor. To place the wiper arms in a service position, switch your vehicle on in accessory mode, switch on the wipers and switch your vehicle off when the wipers are at their highest position.*

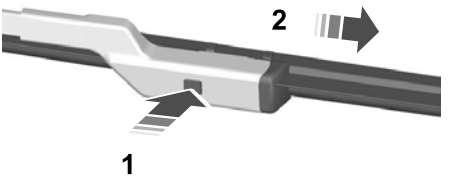

1. Lift the wiper arm and then press the wiper blade locking button.

Note: *Do not hold the wiper blade to lift the wiper arm.*

2. Remove the wiper blade.

Note: *Make sure that the wiper arm does not spring back against the glass when the wiper blade is not attached.*

3. To install, reverse the removal procedure.

Note: *Make sure that the wiper blade locks into place.*

WASHERS

WASHER PRECAUTIONS

WARNING: If you operate your vehicle in temperatures below 5ºC (41ºF), use washer fluid with antifreeze protection. Failure to use washer fluid with antifreeze protection in cold weather could result in impaired windshield vision and increase the risk of injury or accident.

Do not operate the washers when the washer reservoir is empty. This could cause the washer pump to overheat.

Keep the outside of the windshield clean. The rain sensor is very sensitive and the wipers may operate if dirt, mist or insects hit the windshield.

USING THE WINDSHIELD WASHER

Pull the lever toward you to operate the windshield washer.

Note: *A courtesy wipe occurs a short time after the wipers stop to clear any remaining washer fluid when switched on. See* ***Switching the Courtesy Wipe On and Off*** *(page 97).*

SWITCHING THE COURTESY WIPE ON AND OFF

1. From the settings menu, press Vehicle. See **Center Display** (page 599).
2. Press Wipers.
3. Switch Courtesy Wipe on or off.

Note: *When you switch the feature on, the wipers make an additional single wipe at the end of the washer request. When you switch it off, the wipers finish the current washer request.*

Ranger (TRA, TRB) Vehicles Built From: 01-11-2024, CG4010en enGBR, Edition date: 202407, DOM

ADDING WASHER FLUID

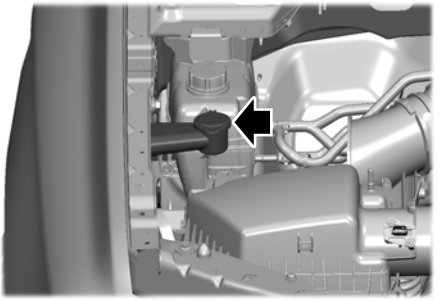

1. Remove the washer fluid reservoir cap.
2. Add washer fluid that meets our specification. See **Washer Fluid Specification** (page 579).
3. Install the washer fluid reservoir cap.

WASHER FLUID SPECIFICATION

See **Washer Fluid Specification** (page 579).

WIPERS AND WASHERS – TROUBLESHOOTING

WIPERS AND WASHERS – WARNING LAMPS

Illuminates when the windshield washer fluid is low.

WIPERS AND WASHERS – FREQUENTLY ASKED QUESTIONS

Why are there streaks and smears on the windshield?

- The wiper blades could be dirty, worn or damaged. Check the wiper blades. See **Checking the Wiper Blades** (page 96). If the wiper blades are dirty, clean them with washer fluid or water applied with a soft sponge or cloth. If the wiper blades are worn or damaged, install new ones. See **Replacing the Front Wiper Blades** (page 96).

Ranger (TRA, TRB) Vehicles Built From: 01-11-2024, CG4010en enGBR, Edition date: 202407, DOM

EXTERIOR LIGHTING CONTROL

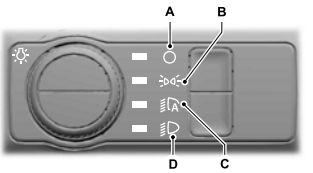

A Lamps off.
B Parking lamps on.
C Autolamps on.
D Headlamps on.

Rotate the control to make a selection.

Note: *The lighting control defaults to autolamps every time you switch your vehicle on.*

HEADLAMPS

USING THE HIGH BEAM HEADLAMPS

Push the lever away from you to switch the high beams on.

Push the lever forward again or pull the lever toward you to switch the high beams off.

Slightly pull the lever toward you and release it to flash the headlamps.

Note: *Continuous activation only with headlamps on.*

Note: *For vehicles with grille-mounted auxiliary high beam lamps, the lamps switch on and off with the high beam headlamps.*

SWITCHING HEADLAMP EXIT DELAY ON AND OFF

To switch headlamp exit delay on, pull the turn signal lever toward you when the headlamps are off and the ignition is off. A short tone sounds when the system is on.

To switch headlamp exit delay off, pull the turn signal lever toward you again or switch your vehicle on.

Note: *The headlamps turn off after three minutes with any door open or 30 seconds after the last door closes.*

ADJUSTING THE LEVEL OF THE HEADLAMPS - VEHICLES WITH: AUTOMATIC HEADLAMP LEVELING

Your vehicle has a dynamic leveling system. The headlamps do not require additional aim adjustment.

ADJUSTING THE LEVEL OF THE HEADLAMPS - VEHICLES WITH: MANUAL HEADLAMP LEVELING

To adjust the level of the headlamp beams:

1. Rotate the control in accordance with your vehicle load to prevent you from distracting other road users when the headlamps are on.

Note: *Set the control to zero when your vehicle is unloaded.*

Note: *Set the headlamp beams to give between 35–100 m (115–328 ft) of road surface illumination when your vehicle is partially or fully loaded.*

HEADLAMP INDICATORS

Lamps On

Illuminates when you switch the low beam headlamps or the parking lamps on.

Headlamp High Beam

Illuminates when you switch the high beam headlamps on.

HEADLAMPS – TROUBLESHOOTING

HEADLAMPS – FREQUENTLY ASKED QUESTIONS

Why is there condensation in the headlamps?

- Headlamps have vents to accommodate normal changes in air pressure. Condensation can be a natural by-product of this design. When moist air enters the lamp assembly through the vents, there is a possibility that condensation can occur when the temperature is cold. When normal condensation occurs, a fine mist can form on the interior of the lens. The fine mist eventually clears and exits through the vents during normal operation.

How much condensation is acceptable?

- The presence of a fine mist, for example no streaks, drip marks or large droplets. A fine mist covers less than 50% of the lens.

How long does it take for the acceptable condensation to clear?

- Clearing time can take as long as 48 hours under dry weather conditions.

How much condensation is unacceptable?

- A water puddle inside the lamp. Streaks, drip marks or large droplets present on the interior of the lens.

What should I do if unacceptable condensation is present?

- Have your vehicle checked as soon as possible.

Why do my headlamps turn off when I have them switched on when I switch my vehicle off?

- The battery saver turns the headlamps off after a short period of time after you switch your vehicle off.

AUTOLAMPS

WHAT ARE AUTOLAMPS

WARNING: The system does not relieve you of your responsibility to drive with due care and attention. You may need to override the system if it does not turn the headlamps on in low visibility conditions, for example daytime fog.

Autolamps turn the headlamps on in low light situations or when the windshield wipers operate.

AUTOLAMP SETTINGS

Autolamp Exit Delay

You can adjust the amount of time the autolamps remain on after you switch off your vehicle. Use the touchscreen to choose a delay setting.

1. From the settings menu, press Vehicle.
2. Press Lighting.
3. Press Autolamp Delay.
4. Select a setting.

Note: *If the setting is off, the external lamps switch off immediately when you shut down your vehicle.*

Note: *You can pull the turn signal toward you to manually switch off the autolamp exit delay.*

EXTERIOR LAMPS

USING THE TURN SIGNAL LAMPS

Push the lever up or down to switch the turn signal lamps on.

Set the lever to the middle position to switch the turn signal lamps off.

Note: *Tap the lever up or down to make the turn signal lamps flash three times.*

Turn Signal Lamp Indicator

It flashes when you switch the turn signal lamps on.

Note: *An increase in the rate of flashing warns of a failed turn signal lamp.*

SWITCHING THE DAYTIME RUNNING LAMPS ON AND OFF

WARNING: The daytime running lamps system may not activate the rear lamps and may not provide adequate lighting during low visibility driving conditions. Make sure you switch the headlamps on, as appropriate, during all low visibility conditions. Failure to do so may result in a crash.

Ranger (TRA, TRB) Vehicles Built From: 01-11-2024, CG4010en enGBR, Edition date: 202407, DOM

Daytime running lamps are always on unless you switch on the headlamps or your vehicle is in park (P).

USING THE FRONT FOG LAMPS - VEHICLES WITH: FRONT FOG LAMPS

To switch the lamps on or off:

1. Set the lighting control to the parking lamps, headlamps or autolamps position.

Note: *When the lighting control is in the autolamps position, you cannot switch the fog lamps on unless the low beam headlamps are on.*

2. Press the button on the lighting control to switch the front fog lamps on or off.

Note: *Only switch the front fog lamps on during reduced visibility.*

Note: *The brightness of the daytime running lamps may decrease when the front fog lamps are switched on.*

Front Fog Lamps Indicator

It illuminates when you switch the front fog lamps on.

USING THE REAR FOG LAMPS

To switch the lamps on or off:

1. Set the lighting control to the headlamps or autolamps position.

Note: *When the lighting control is in the autolamps position, you cannot switch the rear fog lamps on unless the low beam headlamps are on.*

2. Press the button on the lighting control to switch the rear fog lamps on or off.

Note: *Only switch the rear fog lamps on during reduced visibility.*

Rear Fog Lamp Indicator

It illuminates when you switch the rear fog lamps on.

SWITCHING THE CARGO LAMPS ON

Pickup Bed Lamps

The pickup bed lamps turn on when opening any door.

Note: *The cargo lamps turn off after a short period of time.*

Using the Cargo Lamp Switch

Press the button on the lighting control to switch the lamps on and off.

Note: *If the cargo lamps turned on automatically, this button does not turn them off.*

Using the Roller Shutter

The cargo lamps switch on when you open the roller shutter. See **Opening and Closing the Roller Shutter** (page 404).

SWITCHING WELCOME LIGHTING ON AND OFF

Welcome lighting slowly turns on the exterior lamps when you approach your vehicle with an authenticated device or unlock the doors.

EXTERIOR LAMP INDICATORS

Front Fog Lamp Indicator

It illuminates when you switch the front fog lamps on.

Rear Fog Lamp Indicator

It illuminates when you switch the rear fog lamps on.

Turn Signal Lamp Indicator

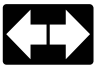

It flashes when you switch the turn signal lamps on.

Note: *An increase in the rate of flashing warns of a failed turn signal lamp.*

EXTERIOR LAMPS ON AUDIBLE WARNING

Exterior Lamps On

Sounds when you open the driver door and the lighting control is left in the parking lamps position and the ignition is off.

EXTERIOR ZONE LIGHTING

WHAT IS EXTERIOR ZONE LIGHTING

Exterior zone lighting divides the exterior lighting into zones and allows you to switch them on and off to provide lighting around the perimeter of your vehicle.

USING THE EXTERIOR ZONE LIGHTING

From the app launcher, press Zone Lighting to access the zone lighting controls. See **Center Display** (page 599).

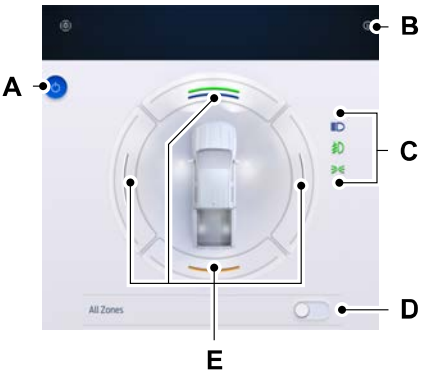

A	On and off button.
B	Contextual help.
C	Exterior lamp indicators.
D	All zones on and off.
E	Individual zones on and off.

You can only use zone lighting when the engine is off and the transmission is in park (P). The lighting switches off after a certain period of time to avoid excess battery drain.

Note: *For vehicles with a manual transmission, you must apply the electric park brake.*

Note: *You can also use individual zone controls to switch on each zone.*

Note: *Make sure to remove exterior lighting covers when using zone lighting.*

Note: *When your vehicle is off and the timer has one minute remaining, the turn signals flash six times.*

Note: *Indicators on the touchscreen illuminate when the lights outside of the zone lighting control are on.*

Note: *You can remotely control the zone lighting using the FordPass app.*

AUTOMATIC HIGH BEAM CONTROL

HOW DOES AUTOMATIC HIGH BEAM CONTROL WORK

Automatic high beam control turns the high beams on if it is dark enough and no other traffic is present. If it detects an approaching vehicle's headlamps or tail lamps, or street lighting ahead, the system turns the high beams off.

A camera sensor, centrally mounted behind the windshield of your vehicle, continuously monitors conditions to turn the high beams on and off.

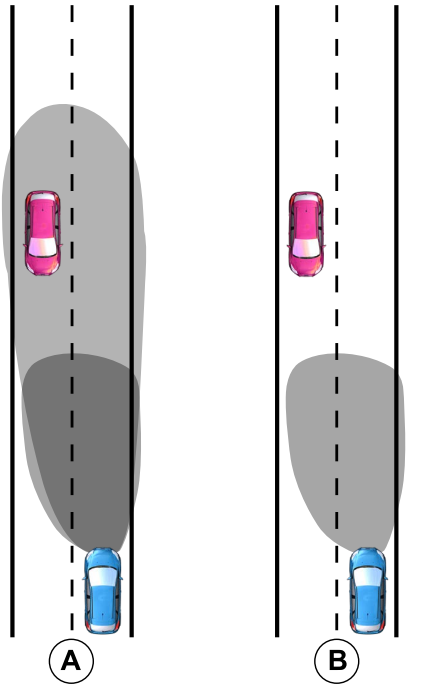

A Without automatic high beam control.

B With automatic high beam control.

AUTOMATIC HIGH BEAM CONTROL PRECAUTIONS

WARNING: The system does not relieve you of your responsibility to drive with due care and attention. You may need to override the system if it does not turn the high beams on or off.

WARNING: The system may not switch the high beams off if the lights of oncoming vehicles are hidden by obstacles, for example guard rails.

WARNING: You may need to override the system when approaching other road users.

WARNING: In situations with poor visibility, such as fog, heavy rain or other inclement weather, you may need to override or completely switch off the system.

AUTOMATIC HIGH BEAM CONTROL REQUIREMENTS

The system turns the high beams on if all of the following occur:

- You switch the system on.
- You set the lighting control to the autolamps position.
- The ambient light level is low enough that you require high beams.
- There is no traffic in front of your vehicle.
- The vehicle speed is greater than approximately 40 km/h (25 mph).

AUTOMATIC HIGH BEAM CONTROL LIMITATIONS

The system turns the high beams off if any of the following occur:

- You switch the system off.
- You set the lighting control to any position except autolamps.
- The ambient light level is high enough that you do not require high beams.
- The system detects an approaching vehicle's headlamps or a leading vehicle's tail lamps.
- The system detects severe rain, snow or fog.
- The system detects street lighting.
- The camera has reduced visibility.
- The vehicle speed falls below approximately 30 km/h (19 mph).

Note: *The deactivation speed may be lower on curves.*

SWITCHING AUTOMATIC HIGH BEAM CONTROL ON AND OFF

1. From the settings menu, press Vehicle.
2. Press Lighting.
3. Switch Auto High Beam on or off.

AUTOMATIC HIGH BEAM CONTROL INDICATORS

Illuminates to confirm when the system is ready to assist.

OVERRIDING AUTOMATIC HIGH BEAM CONTROL

Push the lever away from you to switch the high beams on.

Push the lever away from you again to switch the high beams off.

Ranger (TRA, TRB) Vehicles Built From: 01-11-2024, CG4010en enGBR, Edition date: 202407, DOM

Push the lever away from you for a third time to switch automatic high beam control back on.

AUTOMATIC HIGH BEAM CONTROL – TROUBLESHOOTING

AUTOMATIC HIGH BEAM CONTROL – INFORMATION MESSAGES

Message	Details
Front camera Low visibility Clean screen	The camera has reduced visibility. Clean the windshield. If the message continues to appear, have your vehicle checked as soon as possible.
Front camera temporarily not available	The camera has malfunctioned. Wait a short period of time for the camera to cool down. If the message continues to appear, have your vehicle checked as soon as possible.
Front camera malfunction Service required	The camera has malfunctioned. Have your vehicle checked as soon as possible.

GLARE FREE LIGHTING

HOW DOES GLARE FREE LIGHTING WORK

Glare free lighting enhances visibility and minimizes glare for other road users.

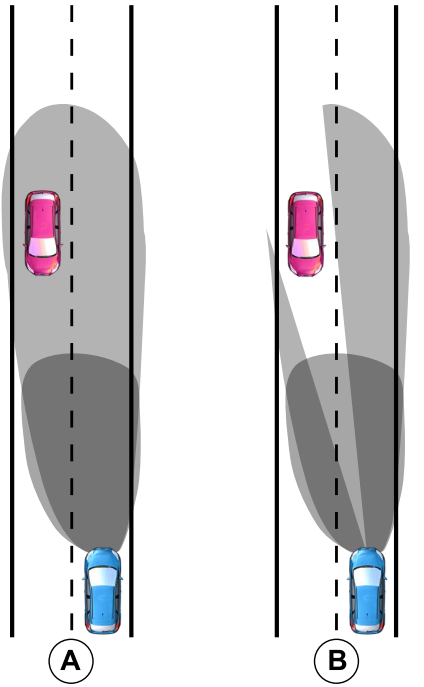

A Without glare free lighting.
B With glare free lighting.

GLARE FREE LIGHTING PRECAUTIONS

WARNING: The system does not relieve you of your responsibility to drive with due care and attention. You may need to override the system if it does not adapt the light.

WARNING: The system may not adapt the lighting to avoid glare if the lights of oncoming vehicles are hidden by obstacles such as guard rails.

WARNING: You may need to override the system when approaching other road users.

WARNING: You may need to override the system during inclement weather.

WARNING: Do not use the system in poor visibility, for example fog, heavy rain, spray or snow.

GLARE FREE LIGHTING REQUIREMENTS

The system turns on if all of the following occur:

- You switch the system on.
- You set the lighting control to the autolamps position.
- The ambient light level is low enough.
- Your vehicle speed is greater than approximately 40 km/h (25 mph).

The system adapts the lighting to avoid glare if all of the following occur:

- You switch the system on.
- You set the lighting control to the autolamps position.
- The system detects an approaching vehicle's headlamps or rear lamps.

Ranger (TRA, TRB) Vehicles Built From: 01-11-2024, CG4010en enGBR, Edition date: 202407, DOM

GLARE FREE LIGHTING LIMITATIONS

The system turns off if any of the following occur:

- You switch the system off.
- You set the lighting control to any position except autolamps.
- The ambient light level is high enough.
- The system detects severe rain, snow or fog.
- The system detects street lighting.
- The camera has reduced visibility.
- The vehicle speed falls below approximately 30 km/h (19 mph).

Note: *The deactivation speed is lower on curves.*

SWITCHING GLARE FREE LIGHTING ON AND OFF

1. From the settings menu, press Vehicle.
2. Press Lighting.
3. Switch Glare Free Lighting on or off.

GLARE FREE LIGHTING INDICATORS

Illuminates to confirm when the system is ready to assist.

OVERRIDING GLARE FREE LIGHTING

Push the lever away from you to switch the high beams on.

Push the lever away from you again to switch the high beams off.

Push the lever away from you for a third time to switch glare free lighting back on.

GLARE FREE LIGHTING – TROUBLESHOOTING

GLARE FREE LIGHTING – INFORMATION MESSAGES

Message	Details
Front camera Low visibility Clean screen	The camera has reduced visibility. Clean the windshield. If the message continues to appear, have your vehicle checked as soon as possible.
Front camera temporarily not available	The camera has malfunctioned. Wait a short period of time for the camera to cool down. If the message continues to appear, have your vehicle checked as soon as possible.
Front camera malfunction Service required	The camera has malfunctioned. Have your vehicle checked as soon as possible.

Ranger (TRA, TRB) Vehicles Built From: 01-11-2024, CG4010en enGBR, Edition date: 202407, DOM

ADAPTIVE FRONT LIGHTING

HOW DOES ADAPTIVE FRONT LIGHTING WORK

Dynamic Bending Lamps

WARNING: Inspect and replace the windshield wiper blades regularly to make sure the camera sensor has a clear view. The windshield wiper blades must be the correct length.

Uses steering wheel and vehicle speed input to adjust the headlamps.

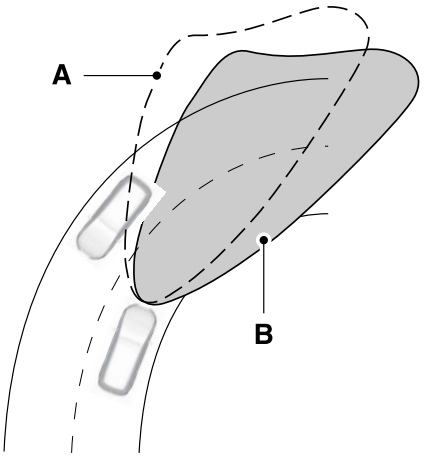

A Without dynamic bending lamps.
B With dynamic bending lamps.

Static Bending Lamps

Illuminates the inside of a corner when you are turning the steering wheel.

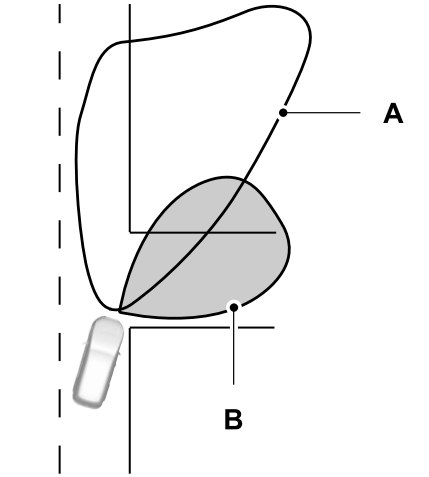

A Headlamp beam.
B Static bending lamp beam.

Note: *Depending on the angel of the steering wheel, the brightness and activation of the feature may vary.*

Cornering Lamps

Illuminates the inside of a corner when you are turning the steering wheel or when you switch the turn signal lamps on. They turn on when the vehicle speed is below 40 km/h (24.9 mph).

Note: *Only the cornering lamp located on the side where your vehicle is turning illuminates.*

Ranger (TRA, TRB) Vehicles Built From: 01-11-2024, CG4010en enGBR, Edition date: 202407, DOM

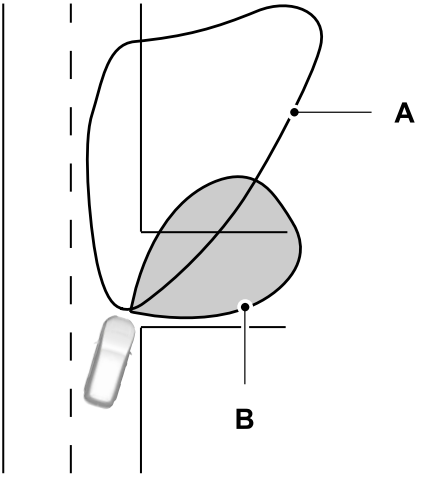

A Headlamp beam.

B Cornering lamp beam.

SWITCHING ADAPTIVE FRONT LIGHTING ON AND OFF

1. From the Settings menu, press Vehicle. See **Center Display** (page 599).
2. Press ***Lighting***.
3. Switch ***Adaptive headlamps*** on or off.

Set the lighting control to the autolamps position or the low beams position to use the adaptive front lighting.

SWITCHING THE HEADLAMPS FOR DRIVING ON THE LEFT OR RIGHT-HAND SIDE OF THE ROAD

1. Press the button on the touchscreen.
2. Press ***Vehicle***.
3. Press ***Lighting***.
4. Press ***Adaptive headlamp setup***.
5. Press a setting.

SWITCHING ALL OF THE INTERIOR LAMPS ON AND OFF

Switching All of the Interior Lamps On

Press the button on the overhead console toward the icon.

Switching All of the Interior Lamps Off

Press the button on the overhead console toward the icon.

SWITCHING THE FRONT INTERIOR LAMPS ON AND OFF

Press the edge of the lamp lens.

SWITCHING THE REAR INTERIOR LAMPS ON AND OFF

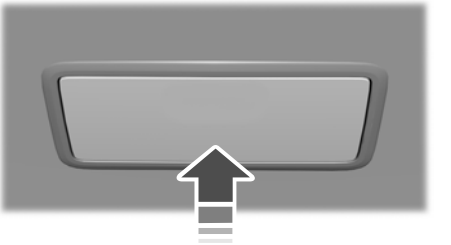

Press the lens to switch the lamps on or off.

Note: *If you switch the rear lamps on through the overhead console, you cannot switch them off with the rear lamp switch.*

INTERIOR LAMP FUNCTION

WHAT IS THE INTERIOR LAMP FUNCTION

The interior lamp function switches the courtesy and door lamps on or off.

SWITCHING THE INTERIOR LAMP FUNCTION ON AND OFF

The switch is on the overhead console.

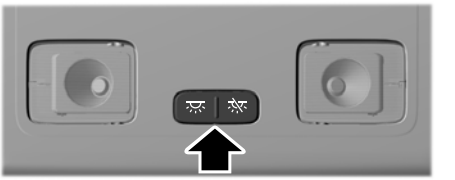

Set the switch to the middle position.

When you switch the interior lamp function on, the interior lamps turn on if:

- You open a door.
- You press the unlock button on the remote control.
- You switch the ignition off.

ADJUSTING THE INSTRUMENT PANEL LIGHTING BRIGHTNESS

The instrument lighting dimmer buttons are on the lighting control.

Repeatedly press one of the buttons to adjust the brightness.

AMBIENT LIGHTING

SWITCHING AMBIENT LIGHTING ON AND OFF

1. From the settings menu, press General. See **Center Display** (page 599).
2. Press Ambient Lighting.
3. Switch Ambient Lighting on or off.

ADJUSTING AMBIENT LIGHTING

Drag the slider left or right.

INTERIOR LIGHTING – TROUBLESHOOTING

INTERIOR LIGHTING – FREQUENTLY ASKED QUESTIONS

Why do my courtesy lamps or interior lamps turn off when I have them switched on when I switch my vehicle off?

- The battery saver turns the courtesy lamps and interior lamps off after a short period of time after you switch your vehicle off.

OPENING AND CLOSING THE WINDOWS

WARNING: Do not leave children or pets unattended in your vehicle and do not let children play with the power windows. Failure to follow this instruction could result in personal injury or death.

WARNING: When closing the power windows, verify that they are free of obstructions and make sure children and pets are not in the proximity of the window openings. Failure to follow this instruction could result in personal injury or death.

WARNING: If an obstruction is detected, release the switch and reverse the window immediately. Failure to follow this instruction could result in personal injury or death.

WARNING: Do not leave a key or remote control unattended in the vehicle. Children or pets could operate the power windows and could become trapped in a closing window. Failure to follow this instruction could result in personal injury or death.

Press the window control switch to open the window. Lift the window control switch to close the window.

Note: *The power windows operate with the ignition on, and for several minutes after you switch the ignition off or until you open a front door.*

To reduce wind noise or pulsing noise when one window is open, slightly open the opposite window.

One-Touch Open

Fully press the window control switch and release it. Press again or lift it to stop the window.

One-Touch Close

Fully lift the window control switch and release it. Press again or lift it to stop the window.

Resetting One-Touch Close

Carry out all steps within 30 seconds of starting the sequence.

1. Close the window.
2. Press and hold the window control switch until the window is fully open. Keep the window control switch pressed for a few seconds.
3. Lift and hold the window control switch until the window is fully closed. Keep the window control switch held for a few seconds.
4. Press and hold the window control switch until the window is fully open. Keep the window control switch pressed for a few seconds.
5. Lift and hold the window control switch until the window is fully closed. Keep the window control switch held for a few seconds.

Note: *Repeat the procedure if the window does not close when you use one-touch.*

GLOBAL OPENING AND CLOSING

WHAT IS GLOBAL OPENING AND CLOSING

You can use the remote control to operate the windows with the ignition off.

Ranger (TRA, TRB) Vehicles Built From: 01-11-2024, CG4010en enGBR, Edition date: 202407, DOM

USING GLOBAL OPENING

1. Press and release the unlock button on the remote control.
2. Within one second, press and hold the unlock button on the remote control.
3. Release the button when the windows start to open.

Press the lock or the unlock button on the remote control to stop global opening.

Note: *Global opening will only respond to a press and hold of the unlock button for a short period of time after the unlock button is pressed on the remote control.*

SWITCHING GLOBAL OPENING ON AND OFF

1. From the settings menu, press Vehicle. See **Center Display** (page 599).
2. Press Windows.
3. Switch Global Open on or off.

USING GLOBAL CLOSING

WARNING: When closing the power windows, verify that they are free of obstructions and make sure children and pets are not in the proximity of the window openings. Failure to follow this instruction could result in personal injury or death.

1. Press and hold the lock button on the remote control.
2. Release the button when the windows start to close.

Press the lock or the unlock button on the remote control to stop global closing.

Note: *Bounce-back is on during global closing. See **What Is Window Bounce-Back** (page 114).*

SWITCHING GLOBAL CLOSING ON AND OFF

1. From the settings menu, press Vehicle. See **Center Display** (page 599).
2. Press Windows.
3. Switch Global Close on or off.

WINDOW BOUNCE-BACK

WHAT IS WINDOW BOUNCE-BACK

The window stops and reverses if it detects an obstruction when closing.

OVERRIDING WINDOW BOUNCE-BACK

WARNING: If you override bounce-back, the window does not reverse if it detects an obstacle. Take care when closing the windows to avoid personal injury or damage to your vehicle.

1. Close the window until it reaches the point of resistance and let it reverse.
2. Lift and hold the window control switch within two seconds to override bounce-back and close the window. Bounce-back is now disabled and you can close the window manually.

Note: *The window goes past the point of resistance and you can fully close it.*

Note: *If the window does not close, have your vehicle checked as soon as possible.*

Ranger (TRA, TRB) Vehicles Built From: 01-11-2024, CG4010en enGBR, Edition date: 202407, DOM

LOCKING THE REAR WINDOW CONTROLS

WARNING: When children and pets are in the rear seat, use the power window lockout button to prevent accidental operation of the power windows.

Press the window control switch to lock or unlock the rear window controls. It illuminates when you lock the rear window controls.

INTERIOR MIRROR PRECAUTIONS

WARNING: Do not adjust the mirrors when your vehicle is moving. This could result in the loss of control of your vehicle, serious personal injury or death.

Note: *Do not clean the mirror housing or glass with harsh abrasives, fuel or other petroleum-based cleaning products.*

MANUALLY DIMMING THE INTERIOR MIRROR

Pull the tab below the mirror toward you to reduce glare at night.

AUTO-DIMMING INTERIOR MIRROR

WHAT IS THE AUTO-DIMMING INTERIOR MIRROR

The mirror dims to reduce the effect of bright light from behind. It returns to normal when the bright light from behind is no longer present or if you shift into reverse (R), to make sure you have a clear view when backing up.

AUTO-DIMMING INTERIOR MIRROR LIMITATIONS

Do not block the sensors on the front and back of the mirror.

Note: *A rear center passenger or raised rear center head restraint could prevent light from reaching the sensor.*

Ranger (TRA, TRB) Vehicles Built From: 01-11-2024, CG4010en enGBR, Edition date: 202407, DOM

ADJUSTING THE EXTERIOR MIRRORS

WARNING: Do not adjust the mirrors when your vehicle is moving. This could result in the loss of control of your vehicle, serious personal injury or death.

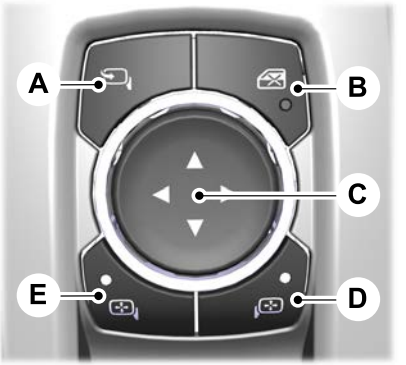

A Power fold.
B Window lock.
C Adjustment control.
D Right-hand mirror.
E Left-hand mirror.

To adjust the mirrors, switch your vehicle on and place the ignition in accessory or start.

1. Select the mirror you want to adjust. The control light turns on.
2. Use the adjustment control to adjust the position of the mirror.
3. Press the mirror control again. The control light turns off.

FOLDING THE EXTERIOR MIRRORS - VEHICLES WITH: MANUAL FOLDING MIRRORS

Push the mirror toward the door window glass. Make sure that you fully engage the mirror in its support when returning it to its original position.

Directional Indicator Mirrors

When your vehicle is running, the forward-facing portion of the appropriate mirror housing blinks when you switch on the turn signal.

Puddle Lamps

The puddle lamps turn on when you approach your vehicle with a remote control or phone. If your vehicle has auto-folding mirrors, the puddle lamps are only on if the mirrors are unfolded and turn off when the mirrors fold.

Heated Exterior Mirrors

See **Switching the Heated Mirrors On and Off** (page 141).

360 Degree Camera

See **Locating the 360 Degree Cameras** (page 315).

Blind Spot Information System

See **What Is Blind Spot Information System** (page 367).

FOLDING THE EXTERIOR MIRRORS - VEHICLES WITH: POWER FOLDING MIRRORS

The exterior mirrors fold when you lock your vehicle and unfold when you unlock your vehicle.

Ranger (TRA, TRB) Vehicles Built From: 01-11-2024, CG4010en enGBR, Edition date: 202407, DOM

Note: *This feature requires you to switch the exterior mirrors auto fold on.*

For tight parking conditions, press the control switch to fold the mirrors.

Press the control switch again to unfold the mirrors.

Note: *Do not stop the mirrors midway through their movement. Wait until the mirrors stop moving and press the control again.*

The left-hand and right-hand mirrors move at different rates. For example, one mirror may stop while the other one continues to move. This is normal.

If you press the control switch to fold the mirrors with auto fold on, the mirrors do not unfold when you unlock your vehicle.

Note: *The power folding mirrors operate with the vehicle on, and for several minutes after you switch the vehicle off.*

Note: *If you fold and unfold the mirrors several times within one minute, the power fold function may turn off to protect the motors from overheating. Wait approximately three minutes with your vehicle running, and up to 10 minutes with your vehicle off, for the system to reset and operate as normal.*

Switching Auto fold On and Off

1. From the settings menu, press Vehicle. See **Center Display** (page 599).
2. Press Mirrors.
3. Switch Autofold on or off.

Loose, Noisy or Intermittently Working Mirrors

If you manually fold the power folding mirrors, they may not work properly even after you reposition them. Reset the mirrors if:

- They vibrate when you drive.
- They feel loose.
- They do not stay in the folded or unfolded position.
- One of the mirrors is not in its normal driving position.
- The mirrors are intermittently working.

To reset the power fold feature, use the power folding mirror control to fold and unfold the mirrors. You may hear a loud noise as you reset the power folding mirrors. This sound is normal. Operate the power folding mirrors an additional 3 to 4 times to synchronize the mirrors.

If the above process does not help you to fix the mirror, perform the following steps.

1. Fold or retract both mirrors manually.
2. Using the power folding control switch, operate the mirrors until you hear an audible click.
3. Operate the power folding an additional 3 to 4 times to synchronize the mirrors.

Repeat this process as needed each time you manually fold the mirrors.

Ranger (TRA, TRB) Vehicles Built From: 01-11-2024, CG4010en enGBR, Edition date: 202407, DOM

INSTRUMENT CLUSTER OVERVIEW - PLUG-IN HYBRID ELECTRIC VEHICLE (PHEV)

Note: *Depending on the setting you select, your cluster could look different than what you see here.*

A	Engine coolant temperature gauge.
B	Tachometer.
C	Compass.
D	Speedometer.
E	High voltage battery gauge.
F	Fuel gauge.
G	Vehicle driving range.
H	Outside air temperature.
I	Odometer.

Note: *The tachometer and high voltage battery gauge can be configured on or off.*

INSTRUMENT CLUSTER OVERVIEW - VEHICLES WITH: 8 INCH SCREEN

Note: *Depending on the setting you select, your cluster could look different than what you see here.*

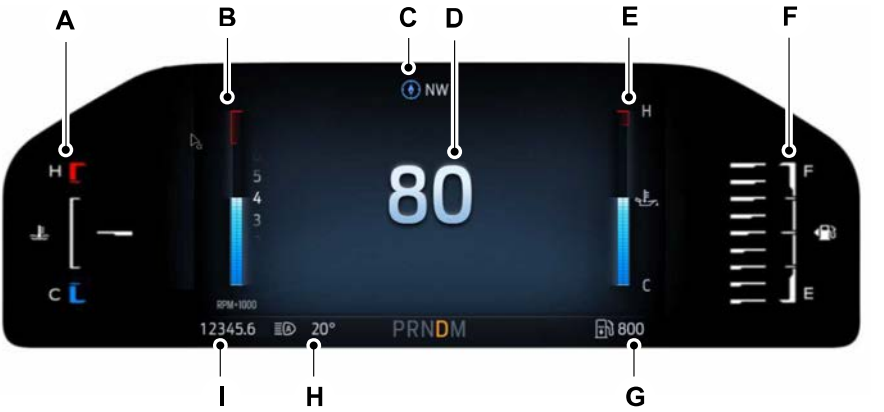

A Engine coolant temperature gauge.
B Tachometer.
C Compass.
D Speedometer.
E Engine oil temperature.
F Fuel gauge.
G Distance to empty.
H Outside air temperature.
I Odometer.

Note: *The tachometer and engine oil temperature gauge can be configured on or off.*

INSTRUMENT CLUSTER OVERVIEW - VEHICLES WITH: 12 INCH SCREEN

Note: *Depending on the setting you select, your cluster could look different than what you see here.*

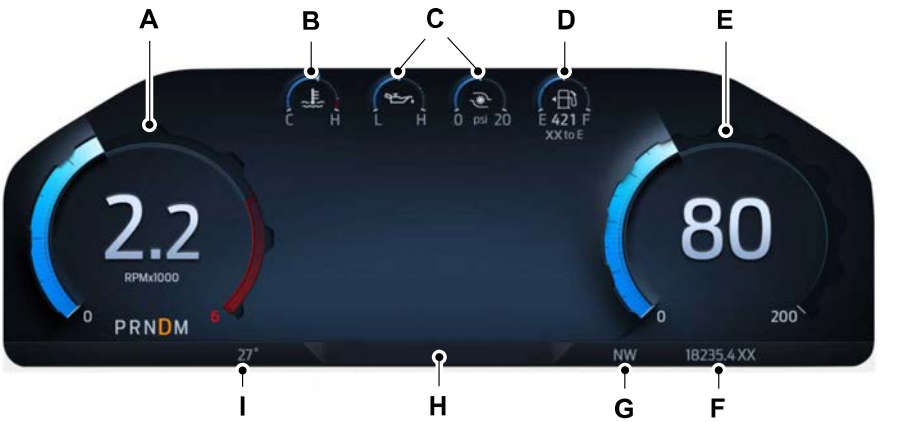

A	Tachometer.
B	Engine coolant temperature gauge.
C	Configurable gauges.
D	Fuel gauge.
E	Speedometer.
F	Odometer.
G	Compass.
H	Information bar.
I	Ambient temperature.

TACHOMETER

Indicates the engine speed.

The red line indicates the point at which engine revolutions could become limited to avoid over-revving the engine.

SPEEDOMETER

Indicates the vehicle speed.

Secondary Speedometer

You can select a secondary speedometer that displays other measurement units.

Note: *When only the primary speedometer is shown, the units are the same as the trip distance units selected.*

FUEL GAUGE

WHAT IS THE FUEL GAUGE

Indicates approximately how much fuel is in the fuel tank.

FUEL GAUGE LIMITATIONS

The fuel gauge may not provide an accurate reading when your vehicle is on an incline.

LOCATING THE FUEL FILLER DOOR

The arrow adjacent to the fuel pump symbol indicates on which side of your vehicle the fuel filler door is located.

WHAT IS THE LOW FUEL REMINDER

A low fuel level reminder displays and sounds when the distance to empty reaches 80 km (50 mi), 40 km (25 mi), 20 km (10 mi) and 0 km (0 mi).

Note: *The low fuel reminder can appear at different fuel gauge positions depending on fuel economy conditions. This variation is normal.*

WHAT IS DISTANCE TO EMPTY

Indicates the approximate distance your vehicle can travel on the fuel remaining in the tank. Changes in driving pattern can cause the value to not only decrease but also increase or stay constant for periods of time.

VEHICLE RANGE DISPLAY - PLUG-IN HYBRID ELECTRIC VEHICLE (PHEV)

Displays the approximate range your vehicle can travel with the energy currently onboard. Estimates vary based on the energy used when driving.

Changes in driving pattern can cause the values to not only decrease but also increase or stay constant for periods of time.

The amount of energy being used when driving is affected by such as:

- Mild or aggressive acceleration or braking.
- Your vehicle's speed.
- Use of accessories, such as climate control.
- Ambient temperature and weather conditions.
- Driving in a city or on a highway.
- Driving on hilly road conditions.
- Towing.

Note: *It is normal for vehicle range estimates to vary due to changes in average energy usage. This could cause different range estimates each time you fully charge your battery or fill your tank.*

Note: *Electric range is lower in cold temperatures due to reduced energy capacity in the high voltage battery. Set a departure time and cabin temperature to maintain battery temperature for best range and performance. See* ***Plug-In Hybrid Electric Vehicle Information*** *(page 198). See* ***Charging Settings*** *(page 241).*

Gasoline Distance to Empty

Indicates the approximate distance your vehicle can travel on the fuel remaining in the tank.

Electric Range

Indicates the approximate distance your vehicle can travel on electric power only with the engine off.

HIGH VOLTAGE BATTERY GAUGE - PLUG-IN HYBRID ELECTRIC VEHICLE (PHEV)

Displays the high voltage battery state of charge. A full, or 100%, charge represents the total amount of energy you can get from plugging your vehicle in.

Charging Status

When you open the door an expanded high voltage battery gauge displays. When plugged in, additional charging information displays such as the charging start or end time, the state of charge limit at which charging stops. You can modify your vehicle charge settings on the center display screen. See **Charging Settings** (page 241).

HIGH VOLTAGE BATTERY TEMPERATURE GAUGE - PLUG-IN HYBRID ELECTRIC VEHICLE (PHEV)

Displays the high voltage battery temperature.

When the battery temperature is outside the normal range, vehicle performance could be reduced and a corresponding message could display.

- When the temperature is too cold, continue driving to warm the system and improve performance.
- When the temperature is too hot, performance could be reduced to cool the system.

ENGINE COOLANT TEMPERATURE GAUGE

Indicates the engine coolant temperature. See **Checking the Coolant** (page 485).

ENGINE OIL PRESSURE GAUGE - VEHICLES WITH: 8 INCH SCREEN

Indicates the engine oil pressure. The gauge turns red when the oil pressure warning lamp illuminates.

This gauge is available in an information on demand screen. See **Instrument Cluster Display Main Menu** (page 128).

ENGINE OIL PRESSURE GAUGE - VEHICLES WITH: 12 INCH SCREEN

Indicates the engine oil pressure. The gauge turns red when the oil pressure warning lamp illuminates.

Note: *This is a configurable gauge.*

TRANSMISSION FLUID TEMPERATURE GAUGE - VEHICLES WITH: 8 INCH SCREEN

Indicates the transmission fluid temperature.

Note: *Special operating conditions such as snowplowing, towing or off-road use can cause higher than normal operating temperatures.*

This gauge is available in an information on demand screen. See **Instrument Cluster Display Main Menu** (page 128).

Ranger (TRA, TRB) Vehicles Built From: 01-11-2024, CG4010en enGBR, Edition date: 202407, DOM

TRANSMISSION FLUID TEMPERATURE GAUGE - VEHICLES WITH: 12 INCH SCREEN

Indicates the transmission fluid temperature.

Note: *Special operating conditions such as snowplowing, towing or off-road use can cause higher than normal operating temperatures.*

Note: *This is a configurable gauge.*

ADBLUE® GAUGE - DIESEL, VEHICLES WITH: 8 INCH SCREEN

Indicates the current AdBlue® level. See **Selective Catalytic Reduction System** (page 222).

This gauge is available in an information on demand screen. See **Instrument Cluster Display Main Menu** (page 128).

ADBLUE® GAUGE - DIESEL, VEHICLES WITH: 12 INCH SCREEN

Indicates the current AdBlue® level.

Note: *This is a configurable gauge.*

USING THE INSTRUMENT CLUSTER DISPLAY CONTROLS - VEHICLES WITH: 8 INCH SCREEN

WARNING: Driving while distracted can result in loss of vehicle control, crash and injury. We strongly recommend that you use extreme caution when using any device that may take your focus off the road. Your primary responsibility is the safe operation of your vehicle. We recommend against the use of any hand-held device while driving and encourage the use of voice-operated systems when possible. Make sure you are aware of all applicable local laws that may affect the use of electronic devices while driving.

The controls are on the steering wheel.

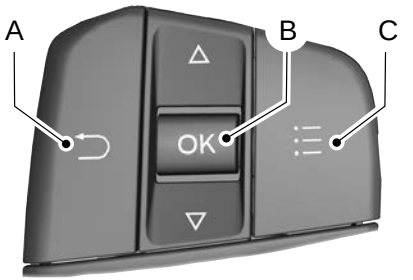

A Back button.
B OK button.
C Menu button.

Back Button

Press to go back or exit a menu.

OK Button

Press to make a selection.

Menu Button

Press to display the submenus.

Scroll Buttons

Press the toggle up or down button to scroll through menu items.

Status Indicator

Menu items with a checkbox indicate a feature's status. A check in the box indicates the feature is on, an unchecked box indicates the feature is off.

USING THE INSTRUMENT CLUSTER DISPLAY CONTROLS - VEHICLES WITH: 12 INCH SCREEN

WARNING: Driving while distracted can result in loss of vehicle control, crash and injury. We strongly recommend that you use extreme caution when using any device that may take your focus off the road. Your primary responsibility is the safe operation of your vehicle. We recommend against the use of any hand-held device while driving and encourage the use of voice-operated systems when possible. Make sure you are aware of all applicable local laws that may affect the use of electronic devices while driving.

The controls are on the steering wheel.

A OK button.
B Back and Menu button.

Back Button

Press to go back or exit a menu.

OK Button

Press to make a selection.

Menu Button

Press to display the submenus.

Scroll Buttons

Press the toggle up or down button to scroll through menu items.

Status Indicator

Menu items with a check box indicate a feature's status. A check in the box indicates the feature is on, and unchecked indicates the feature is off.

INSTRUMENT CLUSTER DISPLAY MAIN MENU - PLUG-IN HYBRID ELECTRIC VEHICLE (PHEV)

Depending on your vehicle options, some menu items can appear different or not at all.

Note: *For your safety, some features are speed-dependent and could be unavailable when your vehicle is above a certain speed.*

Main Menu	Submenu 1	Submenu 2
MyView	Configure MyView	See **Customizing the Instrument Cluster Display** (page 134).
Trip/Fuel	Trip 1	
	Trip 2	
	This Trip	
	Electric Economy	
	Fuel Economy	
	Eco Coach	
	Auto StartStop	
	Seatbelt Status	

Main Menu	Submenu 1	Submenu 2
	Local Hazard Information	
Off-Road	Off-Road Status	
	Power Distribution	
	Truck Gauges	
	Engine Info	
Towing	Trailer Information	
	Towing Status	
Audio	See **Audio System** (page 595).	
Phone	See **Phone** (page 606).	
Navigation	See **Navigation** (page 611).	
Settings	Screen Content	Secondary Speedometer
		Left Gauge
		Right Gauge
		Eco Advice
		Brake Coach
		Border Crossing Reminder
		Turn-By-Turn Indication
	Classic View	Round Speedometer Gauge
		Digital Speedometer only
Vehicle Maintenance	Oil Life	
	Engine Air Filter	
	Tire Pressure	

Ranger (TRA, TRB) Vehicles Built From: 01-11-2024, CG4010en enGBR, Edition date: 202407, DOM

INSTRUMENT CLUSTER DISPLAY MAIN MENU - VEHICLES WITH: 8 INCH SCREEN

Depending on your vehicle options, some menu items can appear different or not at all.

Note: *For your safety, some features are speed-dependent and could be unavailable when your vehicle is above a certain speed.*

Main Menu	Submenu 1	Submenu 2
MyView	Configure MyView	See **Customizing the Instrument Cluster Display** (page 134).
Trip/Fuel	Trip Computer 1	
	Trip Computer 2	
	Fuel Economy	
	Eco Coach	
	Auto StartStop	
	Seatbelts	
	Local Hazard Information	
Off-Road	Off-Road Status	
	Power Distribution	
	Vehicle Gauges	
	Engine Info	
Towing	Trailer Information	
	Trailer Light Status	
	Trailer Tyre Temperature	
	Towing Status	
Trip Computer	Trip Computer 1	Reset Individual Values
		Configure View
	Trip Computer 2	Reset Individual Values
		Configure View
Audio	See **Audio System** (page 595).	

Main Menu	Submenu 1	Submenu 2
Phone	See **Phone** (page 606).	
Navigation	See **Navigation** (page 611).	
Settings	Screen Content	Secondary Speedometer
		Left Gauge
		Right Gauge
		Border Crossing Reminder
		Turn-By-Turn Indication
	Classic View	Round Speedometer Gauge
		Digital Speedometer Only
Vehicle Maintenance	Oil Life	
	AdBlue® Gauge	
	AdBlue® Level	
	AdBlue® Info	
	Exhaust Filter	
	Engine Air Filter	
	Tyre Pressure	

Ranger (TRA, TRB) Vehicles Built From: 01-11-2024, CG4010en enGBR, Edition date: 202407, DOM

INSTRUMENT CLUSTER DISPLAY MAIN MENU - VEHICLES WITH: 12 INCH SCREEN, EXCLUDING: RAPTOR

Depending on your vehicle options, some menu items can appear different or not at all.

Note: *For your safety, some features are speed-dependent and could be unavailable when your vehicle is above a certain speed.*

Menu Item	Submenu 1	Submenu 2
MyView	Configure MyView	See **Customizing the Instrument Cluster Display** (page 134).
Trip/Fuel	Trip Computer 1	
	Trip Computer 2	
	Auto StartStop	
	Seat belts	
	Driver Assistance	
Off-Road	Off-Road Status	
	Pitch & Roll	
	Power Distribution	
	Driver Assistance	
Towing	Trailer Information	
	Trailer Light Status	
	Towing Status	
	Driver Assistance	
Navigation	See **Navigation** (page 611).	
Phone	See **Phone** (page 606).	
Audio	See **Audio System** (page 595).	
Settings	Configure gauges	Show gauges
		Left selectable gauge
		Right selectable gauge

Menu Item	Submenu 1	Submenu 2
	Secondary Speedometer	
	Turn-By-Turn Indication	
	Border crossing	Reminder on
		Reminder off
Vehicle Maintenance	Tyre pressure	
	Tyre monitor	
	Engine Information	
	Oil Life	
	AdBlue® Info	
	AdBlue® Level	
	Engine Air Filter	
	Exhaust Filter	

INSTRUMENT CLUSTER DISPLAY MAIN MENU - RAPTOR

Depending on your vehicle options, some menu items can appear different or not at all.

Note: *For your safety, some features are speed-dependent and could be unavailable when your vehicle is above a certain speed.*

Menu Item	Submenu 1	Submenu 2
MyView	Configure MyView	See **Customizing the Instrument Cluster Display** (page 134).
Trip/Fuel	Trip Computer 1	
	Trip Computer 2	
	Fuel Economy	
	Eco Behaviour	
	Local Hazard Information	
	Auto StartStop	
	Seat belts	
	Driver Assistance	
Off-Road	Off-Road Status	
	Raptor status	
	Pitch & Roll	
	Power Distribution	
	Driver Assistance	
	MyGauges	
	Measurements	
Towing	Trailer Information	
	Trailer Light Status	
	Towing Status	
	Driver Assistance	
Navigation	See **Navigation** (page 611).	
Phone	See **Phone** (page 606).	

Ranger (TRA, TRB) Vehicles Built From: 01-11-2024, CG4010en enGBR, Edition date: 202407, DOM

Menu Item	Submenu 1	Submenu 2
Audio	See **Audio System** (page 595).	
Settings	Configure gauges	Show gauges
		Left selectable gauge
		Right selectable gauge
	Secondary Speedometer	
	Turn-By-Turn Indication	
	Performance shift indicator	Enabled
		Shift tone
		Shift point
	Eco Coach	Visible in ECO
		Visible in Normal
		Eco Advice
	Border crossing	Reminder on
		Reminder off
Vehicle Maintenance	Tyre pressure	
	Tyre monitor	
	Engine Information	
	Oil Life	
	AdBlue® Info	
	AdBlue® Level	
	Engine Air Filter	
	Exhaust Filter	

CUSTOMIZING THE INSTRUMENT CLUSTER DISPLAY - VEHICLES WITH: 8 INCH SCREEN

Adding Screens Using MyView

1. Using the instrument cluster display controls on the steering wheel, select ***MyView***.
2. Select ***Configure MyView***.
3. Select an item from the list that you want to include in your MyView list.

Note: *A minimum of two items must be selected.*

Note: *You can select a maximum of seven items to include in MyView.*

4. Press the ***OK*** button.

Configuring Gauges

1. Select ***Settings***.
2. Select ***Screen Content***.
3. Select ***Left Gauge*** or ***Right Gauge*** to switch the gauge on or off.

CUSTOMIZING THE INSTRUMENT CLUSTER DISPLAY - VEHICLES WITH: 12 INCH SCREEN

Adding Screens Using MyView

1. Using the instrument cluster display controls on the steering wheel, select ***MyView***.
2. Select ***Configure MyView***.
3. Select an item from the list that you want to include in your MyView list.

Note: *A minimum of two items must be selected.*

Note: *You can select a maximum of seven items to include in MyView.*

4. Press the ***OK*** button.

Configuring Gauges

1. Select ***Settings***.
2. Select ***Configure gauges***.
3. Select to change the left-hand side and right-hand side gauges.

FUEL ECONOMY DISPLAY - PLUG-IN HYBRID ELECTRIC VEHICLE (PHEV)

This display comes with an instant fuel economy gauge, along with the average fuel economy. The gauge continuously averages the fuel economy since your last reset.

The system includes both the electric only and the hybrid operation in the calculation. More electric only driving results in a greater average fuel economy.

When the gasoline engine is off, changes from the instant fuel economy gauge to an electric driving message.

Note: *Press and hold the **OK** button on the controls on the steering wheel to reset your average fuel economy.*

EV COACH - PLUG-IN HYBRID ELECTRIC VEHICLE (PHEV)

EV coach can help you get the most out of your vehicle's electric driving capabilities.

When you are accelerating or maintaining speed you see a blue or white solid bar indicating vehicle power. You may also see a blue rectangular box which shows the power level at which the engine turns on.

Ranger (TRA, TRB) Vehicles Built From: 01-11-2024, CG4010en enGBR, Edition date: 202407, DOM

- When the power level is within the box, the color of the bar is blue. This means you are in electric operation and the engine is off.
- When the power level is outside of the box, the color of the bar is white. This means you are in hybrid operation with a combination of the electric motor and the engine providing vehicle power.

When you are decelerating with either your foot off the accelerator pedal or on the brake pedal, a green or white solid bar displays indicating the power being used to slow down your vehicle. You may also see a green rectangular box which shows the amount of power that can be recaptured by the regenerative braking system and returned to the high voltage battery.

- When the power level is within the box, the color of the bar will be all green. This means that the regenerative braking system is being used to efficiently slow your vehicle down and return the maximum percentage of energy to the high voltage battery.
- When the power level is outside of the box, then the bar is white. This means both the regenerative braking system and conventional braking system are being used.

ELECTRIC ECONOMY - PLUG-IN HYBRID ELECTRIC VEHICLE (PHEV)

This screen shows your average driving distance per kilowatt-hour of electricity used on your plug-in hybrid vehicle. The value is calculated only when your available electric range is being used and the gasoline engine is off.

Distance per full charge is also shown. This is an estimate of the electric range you would have if you plugged in and fully charged your vehicle right now. The higher your electric economy, the higher your distance per full charge.

Your electric economy is affected by your driving style and route, climate control use, outside temperature and other factors. Best economy is achieved with mild to moderate acceleration and braking, moderate speeds and low climate control usage.

Note: *Electric economy is a selectable screen. See* ***Customizing the Instrument Cluster Display*** *(page 134).*

BRAKE COACH - PLUG-IN HYBRID ELECTRIC VEHICLE (PHEV)

The brake coach appears after your vehicle has come to a stop. It coaches you to brake in a manner that maximizes the amount of energy returned through the regenerative braking system.

The percent displayed indicates the regenerative braking efficiency, with 100% representing the maximum amount of energy recovered.

Note: *While regenerative braking works in all drive modes, brake coach display may not be available in all drive modes.*

You can switch brake coach on or off in the settings menu. See **Instrument Cluster Display Main Menu** (page 128).

Ranger (TRA, TRB) Vehicles Built From: 01-11-2024, CG4010en enGBR, Edition date: 202407, DOM

TRIP SUMMARY - PLUG-IN HYBRID ELECTRIC VEHICLE (PHEV)

The trip summary displays upon shutting off your vehicle. The values are cumulative since you last started your vehicle.

The information shown is the same as the This Trip screen.

VEHICLE CHARGING STATUS - PLUG-IN HYBRID ELECTRIC VEHICLE (PHEV)

The vehicle charge status displays when you switch off your vehicle and when you switch on your vehicle when plugged in. Charging status includes the charge start or charge end time as appropriate. You can modify your charge settings though the touchscreen. See **Charging Settings** (page 241).

ACCESSING THE TRIP COMPUTER

1. Use the instrument cluster display controls to navigate to the main menu.
2. Select ***Trip computer***.
3. Select ***Trip computer 1*** or ***Trip computer 2***.

RESETTING THE TRIP COMPUTER

1. Use the instrument cluster display controls to navigate to the main menu.
2. Select ***Trip computer***.
3. Select ***Trip computer 1*** or ***Trip computer 2***.
4. Press and hold the ***OK*** button for a few seconds.

RESETTING THE INDIVIDUAL TRIP VALUES - VEHICLES WITH: 8 INCH SCREEN

1. Use the instrument cluster display controls to navigate to the main menu.
2. Select ***Trip Computer***.
3. Select ***Trip computer 1*** or ***Trip computer 2***.
4. Select ***Reset individual values***.
5. Select the value to reset.
6. Press and hold the ***OK*** button for a few seconds.

CONFIGURING THE TRIP COMPUTER - VEHICLES WITH: 8 INCH SCREEN

1. Use the instrument cluster display controls to navigate to the main menu.
2. Select ***Trip Computer***.
3. Select ***Trip computer 1*** or ***Trip computer 2***.
4. Select ***Configure view***.
5. Select the value to display.
6. Press the ***OK*** button.

WHAT IS REMOTE START

The system allows you to remotely start your vehicle and to adjust the interior temperature according to the settings that you chose.

REMOTE START PRECAUTIONS

WARNING: Do not start the engine in a closed garage or in other enclosed areas. Exhaust fumes are toxic. Always open the garage door before you start the engine. Failure to follow this instruction could result in personal injury or death.

REMOTE START LIMITATIONS

Remote start does not work under the following conditions:

- The alarm horn is sounding.
- The hood is open.
- The transmission is not in park (P).
- The ignition is on.
- The battery voltage is below the minimum operating voltage.
- Remote start is not enabled.

Note: *Do not use remote start if the fuel level is low.*

Note: *You can use remote start with FordPass. See* ***Connecting FordPass to the Modem*** *(page 590).*

ENABLING REMOTE START

1. From the settings menu, press Vehicle. See **Center Display** (page 599).
2. Press Remote Start Setup.
3. Switch Remote Start on or off.

Note: *To remote start with FordPass, make sure that the modem is enabled. See* ***Enabling and Disabling the Modem*** *(page 590).*

REMOTELY STARTING AND STOPPING THE VEHICLE

WARNING: Do not start the engine in a closed garage or in other enclosed areas. Exhaust fumes are toxic. Always open the garage door before you start the engine. Failure to follow this instruction could result in personal injury or death.

Use the FordPass app to start the vehicle.

- The vehicle locks the doors.
- The turn signal lamps flash twice.
- The parking lamps turn on when the vehicle is running.
- The horn sounds if the system fails to start.
- All other vehicle systems remain off when you have remotely started the vehicle.

Note: *You may have to wait a short period of time before remotely starting the vehicle after the vehicle stops running.*

The vehicle remains secured when you have remotely started it. A valid key must be inside your vehicle to switch the ignition on and drive your vehicle.

A maximum of two remote starts are allowed. After that you need to turn the ignition on and off before you can use remote start again.

Use the FordPass app to switch the vehicle off.

EXTENDING THE REMOTE START DURATION

Use your FordPass App to extend the remote start duration.

If the duration is set to 15 minutes, the duration extends by another 15 minutes. This provides a total of 30 minutes.

Note: *Remote start can only be extended once.*

REMOTE START SETTINGS

1. From the settings menu, press Vehicle. See **Center Display** (page 599).
2. Press Remote Start Setup.

Switching Climate Control Auto Mode On and Off

1. Press Climate Control.
2. Press Auto or Last Settings.

Note: *If you switch the auto mode on, the system attempts to heat or cool the interior to 22°C (72°F). When you switch the vehicle on, the climate control system returns to the last used settings.*

Note: *If you switch the last settings on, the system remembers the last used settings.*

Heated Seat Settings

1. Press Seats.
2. Press Auto or Off.

Note: *If you switch the heated seat settings on, the heated seats turn on during cold weather.*

Heated Steering Wheel Settings

1. Press Seats and Steering Wheel.
2. Press Auto or Off.

Note: *If you switch the heated steering wheel settings on, the heated steering wheel turns on during cold weather.*

Remote Start Duration

1. Press Duration.
2. Press the duration you prefer.

Ranger (TRA, TRB) Vehicles Built From: 01-11-2024, CG4010en enGBR, Edition date: 202407, DOM

IDENTIFYING THE CLIMATE CONTROL UNIT

Depending on your vehicle options, the controls could look different than what you see here.

SWITCHING CLIMATE CONTROL ON AND OFF

Press the button.

SWITCHING RECIRCULATED AIR ON AND OFF

Press the button to recirculate air currently in the passenger compartment.

Note: *Recirculated air may turn off automatically, or prevent you from switching on in all air flow modes except MAX A/C to reduce the risk of fogging. Recirculation may also turn on and off automatically in various air distribution control combinations to improve heating or cooling efficiency.*

SWITCHING AIR CONDITIONING ON AND OFF

Press the button.

Note: *Under certain conditions, the air conditioning compressor could continue to operate after you switch air conditioning off.*

Note: *To keep the system and its components fully functional, switch air conditioning on and let your vehicle idle at least once per month for a minimum of two minutes.*

SWITCHING MAXIMUM DEFROST ON AND OFF

Press the button.

Air flows through the windshield air vents, the temperature is set to the highest setting, and the blower motor adjusts to the highest speed.

You can also use this setting to defog and clear the windshield of a thin covering of ice.

Note: *To prevent window fogging, you cannot select recirculated air when maximum defrost is on.*

Note: *The heated rear window, heated windshield and heated mirrors also turn on when you select maximum defrost.*

Note: *When maximum defrost is on, the air conditioning compressor may continue to operate even though you switch off the A/C.*

SWITCHING MAXIMUM COOLING ON AND OFF

Press the button.

Note: *When you switch maximum cooling off, air conditioning remains on.*

SWITCHING THE HEATED WINDSHIELD ON AND OFF

Press the button on the touchscreen to access the climate controls.

Press the button to clear the windshield of thin ice and fog. The heated windshield turns off after a short period of time.

Note: *The system does not operate if the battery charge level is low.*

Note: *The engine must be running or your vehicle must be ready to drive to switch the system on.*

SWITCHING THE HEATED REAR WINDOW ON AND OFF

Press the button to clear the rear window of thin ice and fog. The heated rear window turns off after a short period of time.

Note: *Do not use harsh chemicals, razor blades or other sharp objects to clean or remove decals from the inside of the heated rear window as this could damage the heated rear window gridlines not covered by the vehicle warranty.*

Note: *The engine must be running or your vehicle must be ready to drive to switch the system on.*

SETTING THE BLOWER MOTOR SPEED

Press **+** or **-** to select the blower motor speed.

SWITCHING THE HEATED MIRRORS ON AND OFF

When you switch the heated rear window on, the heated exterior mirrors turn on. See **Switching the Heated Rear Window On and Off** (page 146).

Note: *Do not remove ice from the mirrors with a scraper or adjust the mirror glass when it is frozen in place.*

Note: *Do not clean the mirror housing or glass with harsh abrasives, fuel or other petroleum-based cleaning products. The vehicle warranty may not cover damage caused to the mirror housing or glass.*

Note: *The engine must be running or your vehicle must be ready to drive to switch the system on.*

SETTING THE TEMPERATURE

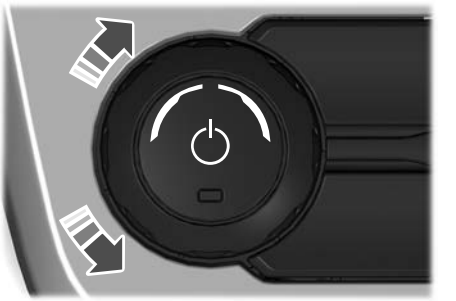

Turn the control on the left-hand side of the climate control to set the left-hand temperature.

Note: *This control also sets the right-hand side temperature when you switch off dual zone mode.*

Turn the control on the right-hand side of the climate control to set the right-hand temperature.

DIRECTING THE FLOW OF AIR

Directing Air to the Windshield Air Vents

Press the button on the touchscreen to access the climate controls.

Press the button.

Directing Air to the Instrument Panel Air Vents

Press the button on the touchscreen to access the climate controls.

Press the button.

Directing Air to the Footwell Air Vents

Press the button on the touchscreen to access the climate controls.

Press the button.

AUTO MODE

SWITCHING AUTO MODE ON AND OFF

Press the button to switch auto mode on. Repeatedly press the button to adjust auto mode.

Adjust the blower motor control or air distribution control to switch auto mode off.

AUTO MODE INDICATORS

The indicators are on the Auto Mode button.

Auto Mode Indicator Status	Description
One indicator illuminated.	The blower motor speed is reduced. Use this setting to minimize the amount of noise from the blower motor. This setting increases the time taken to cool the interior.
Two indicators illuminated.	The blower motor speed is moderate.
Three indicators illuminated.	The blower motor speed is increased. Use this setting to reduce the time taken to cool the interior. This setting increases the amount of noise from the blower motor.

SWITCHING DUAL MODE ON AND OFF

Press the button on the touchscreen to access the climate controls.

Press the button.

CLIMATE CONTROL HINTS

General Hints

- Prolonged use of recirculated air may cause the windows to fog up.
- You may feel a small amount of air from the footwell air vents regardless of the air distribution setting.
- To reduce humidity build-up inside your vehicle, do not drive with the system switched off or with recirculated air always switched on.
- Do not place objects under the front seats as this may interfere with the airflow to the rear seats.
- Remove any snow, ice or leaves from the air intake area at the base of the windshield.
- To improve the time to reach a comfortable temperature in hot weather, drive with the windows open until you feel cold air through the air vents.

Automatic Climate Control

- Adjusting the settings when your vehicle interior is extremely hot or cold is not necessary. Automatic mode is best recommended to maintain set temperature.
- The system adjusts to heat or cool the interior to the temperature you select as quickly as possible.
- For the system to function efficiently, the instrument panel and side air vents should be fully open.
- If you press ***AUTO*** during cold outside temperatures, the system directs air flow to the windshield and side window air vents.In addition, the blower motor may run at a slower speed until the engine warms up.
- If you press ***AUTO*** during hot temperatures and the inside of the vehicle is hot, the system uses recirculated air to maximize interior cooling. Blower motor speed may also reduce until the air cools.

Quickly Heating the Interior

1. Press ***AUTO***.
2. Adjust the temperature function to the setting you prefer.

Recommended Settings for Heating

1. Press ***AUTO***.
2. Adjust the temperature function to the setting you prefer. Use 22ºC (72ºF) as a starting point, then adjust the setting as necessary.

Quickly Cooling the Interior

1. Press ***MAX A/C***.
2. Drive with the windows open for a short period of time.

Recommended Settings for Cooling

1. Press ***AUTO***.
2. Adjust the temperature function to the setting you prefer. Use 22ºC (72ºF) as a starting point, then adjust the setting as necessary.

Ranger (TRA, TRB) Vehicles Built From: 01-11-2024, CG4010en enGBR, Edition date: 202407, DOM

Defogging the Side Windows in Cold Weather

1. Press and release defrost or maximum defrost.
2. Adjust the temperature control to the setting you prefer. Use 22ºC (72ºF) as a starting point, then adjust the setting as necessary.

CLIMATE CONTROL – WARNING LAMPS

WARNING: Even if the temperature rises to above 4ºC (39ºF) there is no guarantee that the road is free of hazards caused by inclement weather.

Illuminates when the outside air temperature is between 4ºC (39.2ºF) and 0ºC (32.0ºF).

IDENTIFYING THE CLIMATE CONTROL UNIT

Depending on your vehicle options, the controls could look different than what you see here.

SWITCHING CLIMATE CONTROL ON AND OFF

Press the button.

SWITCHING RECIRCULATED AIR ON AND OFF

Press the button to recirculate air currently in the passenger compartment.

Note: *Recirculated air may turn off automatically, or prevent you from switching on in all air flow modes except MAX A/C to reduce the risk of fogging. Recirculation may also turn on and off automatically in various air distribution control combinations to improve heating or cooling efficiency.*

SWITCHING AIR CONDITIONING ON AND OFF

Press the button.

Note: *Under certain conditions, the air conditioning compressor could continue to operate after you switch air conditioning off.*

Note: *To keep the system and its components fully functional, switch air conditioning on and let your vehicle idle at least once per month for a minimum of two minutes.*

SWITCHING MAXIMUM DEFROST ON AND OFF

Press the button.

Air flows through the windshield air vents, the temperature is set to the highest setting, and the blower motor adjusts to the highest speed.

You can also use this setting to defog and clear the windshield of a thin covering of ice.

Note: *To prevent window fogging, you cannot select recirculated air when maximum defrost is on.*

Note: *The heated rear window, heated windshield and heated mirrors also turn on when you select maximum defrost.*

Note: *When maximum defrost is on, the air conditioning compressor may continue to operate even though you switch off the A/C.*

SWITCHING MAXIMUM COOLING ON AND OFF

Press the button.

Note: *When you switch maximum cooling off, air conditioning remains on.*

SWITCHING THE HEATED WINDSHIELD ON AND OFF

Press the button on the touchscreen to access the climate controls.

Press the button to clear the windshield of thin ice and fog. The heated windshield turns off after a short period of time.

Note: *The system does not operate if the battery charge level is low.*

Note: *The engine must be running or your vehicle must be ready to drive to switch the system on.*

SWITCHING THE HEATED REAR WINDOW ON AND OFF

Press the button to clear the rear window of thin ice and fog. The heated rear window turns off after a short period of time.

Note: *Do not use harsh chemicals, razor blades or other sharp objects to clean or remove decals from the inside of the heated rear window as this could damage the heated rear window gridlines not covered by the vehicle warranty.*

Note: *The engine must be running or your vehicle must be ready to drive to switch the system on.*

SETTING THE BLOWER MOTOR SPEED

Turn the control to adjust the volume of air circulated in the vehicle.

SWITCHING THE HEATED MIRRORS ON AND OFF

When you switch the heated rear window on, the heated exterior mirrors turn on. See **Switching the Heated Rear Window On and Off** (page 146).

Note: *Do not remove ice from the mirrors with a scraper or adjust the mirror glass when it is frozen in place.*

Note: *Do not clean the mirror housing or glass with harsh abrasives, fuel or other petroleum-based cleaning products. The vehicle warranty may not cover damage caused to the mirror housing or glass.*

Note: *The engine must be running or your vehicle must be ready to drive to switch the system on.*

SETTING THE TEMPERATURE - VEHICLES WITHOUT: HEATER

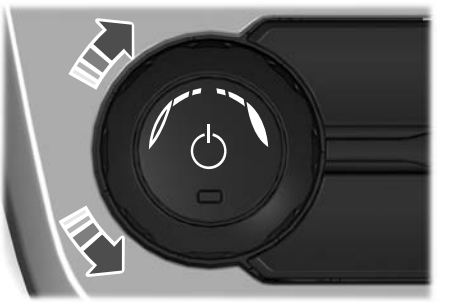

Turn the control to adjust the temperature.

Ranger (TRA, TRB) Vehicles Built From: 01-11-2024, CG4010en enGBR, Edition date: 202407, DOM

SETTING THE TEMPERATURE - VEHICLES WITH: HEATER

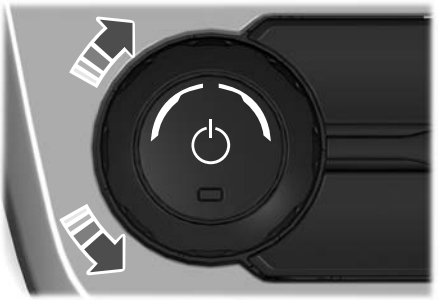

Turn the temperature control counterclockwise for cooler temperature settings.

Turn the temperature control clockwise for warmer temperature settings.

DIRECTING THE FLOW OF AIR

Directing Air to the Windshield Air Vents

Press the button on the touchscreen to access the climate controls.

Press the button.

Directing Air to the Instrument Panel Air Vents

Press the button on the touchscreen to access the climate controls.

Press the button.

Directing Air to the Footwell Air Vents

Press the button on the touchscreen to access the climate controls.

Press the button.

CLIMATE CONTROL HINTS

General Hints

- Prolonged use of recirculated air may cause the windows to fog up.
- You may feel a small amount of air from the footwell air vents regardless of the air distribution setting.
- To reduce humidity build-up inside your vehicle, do not drive with the system switched off or with recirculated air always switched on.
- Do not place objects under the front seats as this may interfere with the airflow to the rear seats.
- Remove any snow, ice or leaves from the air intake area at the base of the windshield.
- To improve the time to reach a comfortable temperature in hot weather, drive with the windows open until you feel cold air through the air vents.

Quickly Heating the Interior

1. Adjust the blower motor speed to the highest speed setting.
2. Adjust the temperature control to the highest setting.
3. Direct air to the footwell air vents.

Ranger (TRA, TRB) Vehicles Built From: 01-11-2024, CG4010en enGBR, Edition date: 202407, DOM

Recommended Settings for Heating

1. Adjust the blower motor speed to the center setting.
2. Adjust the temperature control to the midway point of the hot settings.
3. Direct air to the footwell air vents.

Quickly Cooling the Interior

1. Press ***MAX A/C***.
2. Drive with the windows open for a short period of time.

Recommended Settings for Cooling

1. Adjust the blower motor speed to the center setting.
2. Adjust the temperature control to the midway point of the cold settings.
3. Direct air to the instrument panel air vents.

Defogging the Side Windows in Cold Weather

1. Direct air to the instrument panel and windshield air vents.
2. Press and release ***A/C***.
3. Adjust the temperature control to the setting you prefer.
4. Adjust the blower motor speed to the highest setting.
5. Direct air toward the side windows.
6. Close the instrument panel air vents.

Ranger (TRA, TRB) Vehicles Built From: 01-11-2024, CG4010en enGBR, Edition date: 202407, DOM

WHAT IS THE AUXILIARY HEATER

The auxiliary heater is designed to reduce the time needed to heat the engine when it is running. It turns on or off depending on the outside air temperature and the coolant temperature.

The system warms the engine and the vehicle interior. It uses fuel from the vehicle's fuel tank.

AUXILIARY HEATER PRECAUTIONS

WARNING: We recommend that you have a qualified technician check and repair the heater system after a crash. Failure to follow this instruction could result in personal injury or death.

WARNING: Do not use the auxiliary heater at fuel filling stations or near sources of combustible vapors, dust or in enclosed spaces. Failure to follow this instruction could result in personal injury or death.

Note: *Make sure the heater exhaust outlet, behind the right front tire, is free from snow, ice, mud, and any other blockages to avoid issues with heater operation.*

Note: *If the heater is in the process of stopping, excess fuel in the heater burns out and there is some heat, exhaust and noise.*

Note: *When the system is on, exhaust fumes come from under your vehicle. This is normal.*

AUXILIARY HEATER LIMITATIONS

The system does not operate in any of the following conditions:

- The battery charge level is low.
- The fuel level is low.
- The outside temperature is too high.

The system may not correctly operate when your vehicle is parked on a steep slope.

SWITCHING THE AUXILIARY HEATER ON AND OFF

1. Press settings.
2. Press Vehicle.
3. Switch Aux Heater on or off.

Ranger (TRA, TRB) Vehicles Built From: 01-11-2024, CG4010en enGBR, Edition date: 202407, DOM

WHAT IS THE PARKING HEATER

The parking heater warms the engine and the vehicle interior when your vehicle is parked. It uses fuel from the vehicle's fuel tank.

PARKING HEATER PRECAUTIONS

WARNING: We recommend that you have a qualified technician check and repair the heater system after a crash. Failure to follow this instruction could result in personal injury or death.

WARNING: Do not use the parking heater at fuel filling stations or near sources of combustible vapors, dust or in enclosed spaces. Failure to follow this instruction could result in personal injury or death.

Note: *Make sure the heater exhaust outlet, behind the right front tire, is free from snow, ice, mud, and any other blockages to avoid issues with heater operation.*

Note: *If the heater is in the process of stopping, excess fuel in the heater burns out and there is some heat, exhaust and noise.*

Note: *When the system is on, exhaust fumes come from under your vehicle. This is normal.*

PARKING HEATER LIMITATIONS

The system only operates when your vehicle is stationary with the engine off.

The system does not operate in any of the following conditions:

- The battery charge level is low.
- The fuel level is low.
- The outside temperature is too high.

The system may not correctly operate when your vehicles is parked on a steep slope.

PARKING HEATER SETTINGS

SWITCHING CONTINUE HEAT ON

When you switch the ignition off, the heater starts or continues running if conditions permit for up to 30 minutes.

1. Press settings.
2. Press Vehicle.
3. Press Park Heater.
4. Switch Continue Heat on or off.

Note: *You can use this mode to maintain a warm cabin after you switch the ignition off. After the heater completes this mode, the checkbox in the touchscreen resets to unchecked.*

SETTING THE PARKING HEATER TIMER

The system has three different modes that you can set.

Single Time

Allows you to set one heating cycle for a specific day. If conditions permit, the parking heater starts up to 40 minutes prior to the set date and time.

1. Press Settings.
2. Press Vehicle.
3. Press Park Heater.
4. Press Heater Programming.

5. Press Single time.
6. Set the date and time you prefer.
7. Switch Activate on or off.

Note: *The date and time must be set before you can activate this mode.*

Note: *The time and date on your vehicle clock must be correctly set.*

Recurring Time One

Allows you to program a heating cycle for each day of the week. The time remains stored and the system warms up your vehicle prior to the programmed departure time.

1. Press Settings.
2. Press Vehicle.
3. Press Park Heater.
4. Press Heater Programming.
5. Press Recurring time one.
6. Set the date and time you prefer.
7. Switch Activate on or off.

Note: *The time and date on your vehicle clock must be correctly set.*

Recurring Time Two

Allows you to program a second heating cycle for each day of the week. The time remains stored and the system warms up your vehicle prior to the programmed departure time.

1. Press Settings.
2. Press Vehicle.
3. Press Park Heater.
4. Press Heater Programming.
5. Press Recurring time two.
6. Set the date and time you prefer.
7. Switch Activate on or off.

Note: *The time and date on your vehicle clock must be correctly set.*

SWITCHING THE PARKING HEATER ON AND OFF WITH THE REMOTE CONTROL

The parking heater transmitter allows you to remotely request the heater to start and run for up to 30 minutes or to stop all heater modes.

To start the heater, press and hold the **ON** or **HEAT** button on the transmitter until a green LED light illuminates on the transmitter.

To stop the heater, press and hold the **OFF** button on the transmitter until a red LED light illuminates on the transmitter. This applies only for the heater mode running at the present time, so future timer settings or future continue heat settings do not disable.

Note: *Up to three transmitters can be paired to your vehicle.*

Note: *Electronic devices that operate in the same frequency may affect the range of the transmitter.*

Ranger (TRA, TRB) Vehicles Built From: 01-11-2024, CG4010en enGBR, Edition date: 202407, DOM

PARKING HEATER REMOTE CONTROL INDICATORS

Transmitter LED	Description
Green	The transmitter sent a radio signal to switch on the heater.
Flashing green	The transmitter sent a radio signal to switch on the heater, but the heater did not receive the signal.
Red	The transmitter sent a radio signal to switch off the heater.
Flashing red	The transmitter sent a radio signal to switch off the heater, but the heater did not receive the signal.

Note: *The LED light on the remote transmitter does not indicate the actual status of the heater. The light does not guarantee the heater received a signal to start or stop.*

CHANGING THE PARKING HEATER REMOTE CONTROL BATTERY

WARNING: Keep batteries away from children to prevent ingestion. Failure to follow this instruction could result in personal injury or death. If ingested, immediately seek medical attention.

WARNING: If the battery compartment does not securely close, stop using the remote control and replace it as soon as possible. In the meantime, keep the remote control away from children. Failure to follow this instruction could result in personal injury or death.

CAUTION: The battery can cause severe or fatal injuries in two hours or less if swallowed or placed inside any part of the body. Seek medical attention immediately.

Make sure that you dispose of old batteries in an environmentally friendly way. Seek advice from your local authority about recycling old batteries.

The remote control uses one three-volt lithium battery CR11108 or equivalent.

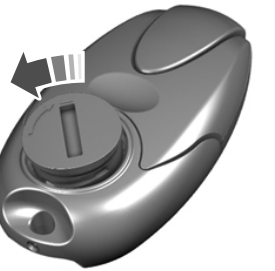

1. Insert a suitable tool, for example a screwdriver or coin, to unscrew and remove the battery cover.

2. Remove the battery.
3. Install a new battery with the + facing upward.
4. Replace the battery cover.

PARKING HEATER – TROUBLESHOOTING

PARKING HEATER – INFORMATION MESSAGES

Message	Details
Park heater not started Low fuel level	Displays if the fuel level is too low.
Park heater not started Low battery state of charge	Displays if the battery is low or has no charge.
Park heater not started Outside temperature too high	Displays if the outside temperature is too high.
Park heater not started Vehicle not started over 7 days	If the vehicle has not been started in seven days or more before a programmed start, the timer is deleted and must be reset.

WHAT IS THE CABIN AIR FILTER

The cabin air filter improves the quality of air in your vehicle by trapping dust, pollen and other particles.

REPLACING THE CABIN AIR FILTER

Replace the filter at regular intervals.

The cabin air filter is behind the glove compartment.

To remove the lower glove compartment and access the filter:

1. Open the glove compartment.

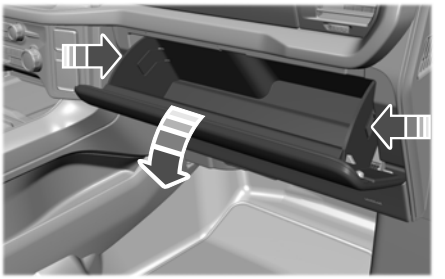

2. Press the tab on each side.
3. Fully lower the glove compartment.
4. Pull the glove compartment toward you.

Ranger (TRA, TRB) Vehicles Built From: 01-11-2024, CG4010en enGBR, Edition date: 202407, DOM

FRONT SEAT PRECAUTIONS

WARNING: Sitting improperly, out of position or with the seatback reclined too far can take weight off the seat cushion and affect the decision of the passenger sensing system, resulting in serious injury or death in the event of a crash. Always sit upright against your seat back, with your feet on the floor.

WARNING: All occupants of your vehicle, including the driver, should always keep their whole body inside the vehicle when it is moving.

WARNING: Do not recline the seat backrest too far as this can cause the occupant to slide under the seatbelt, resulting in personal injury in the event of a crash.

WARNING: Do not place objects higher than the top of the seat backrest. Failure to follow this instruction could result in personal injury or death in the event of a sudden stop or crash.

WARNING: Do not adjust the driver seat or seat backrest when your vehicle is moving. This may result in sudden seat movement, causing the loss of control of your vehicle.

SITTING IN THE CORRECT POSITION

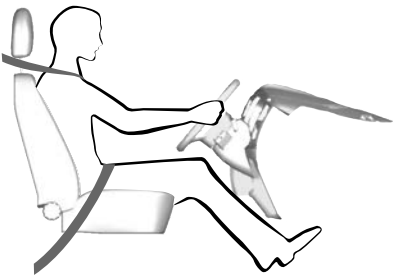

When you use them properly, the seat, head restraint, seatbelt and airbags will provide optimum protection in the event of a crash.

We recommend that you follow these guidelines:

- Sit in an upright position with the base of your spine as far back as possible.
- Do not recline the seat backrest so that your torso is more than 30 degrees from the upright position.
- Adjust the head restraint so that the top of it is level with the top of your head and as far forward as possible. Make sure that you remain comfortable.
- Keep sufficient distance between yourself and the steering wheel. We recommend a minimum of 25 cm (10 in) between your breastbone and the airbag cover.
- Hold the steering wheel with your arms slightly bent.

- Bend your legs slightly so that you can press the pedals fully.
- Position the shoulder strap of the seatbelt over the center of your shoulder and position the lap strap tightly across your hips.

Make sure that your driving position is comfortable and that you can maintain full control of your vehicle.

MANUAL SEATS

HEAD RESTRAINT COMPONENTS

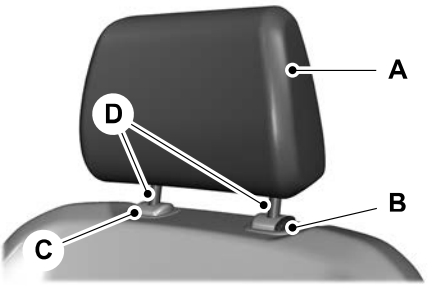

The head restraints consist of:

A	An energy absorbing head restraint.
B	Guide sleeve lock and release button.
C	Guide sleeve.
D	Two steel stems.

ADJUSTING THE HEAD RESTRAINT

WARNING: Fully adjust the head restraint before you sit in or operate your vehicle. This will help minimize the risk of neck injury in the event of a crash. Do not adjust the head restraint when your vehicle is moving.

WARNING: The head restraint is a safety device. Whenever possible it should be installed and properly adjusted when the seat is occupied. Failure to adjust the head restraint properly could reduce its effectiveness during certain impacts.

WARNING: Adjust the head restraints for all passengers before you drive your vehicle. This will help minimize the risk of neck injury in the event of a crash. Do not adjust the head restraints when your vehicle is moving.

Note: *Adjust the seat backrest to an upright driving position before adjusting the head restraint. Adjust the head restraint so that the top of it is level with the top of your head. Make sure that you remain comfortable. If you are tall, adjust the head restraint to its highest position.*

Pull the head restraint up to raise it.

To lower the head restraint:

1. Press and hold the adjust and release button.
2. Push the head restraint down.

REMOVING THE HEAD RESTRAINT

1. Pull up the head restraint until it reaches its highest position.
2. Press and hold the adjust and release button and the unlock and remove button.
3. Pull up the head restraint.

INSTALLING THE HEAD RESTRAINT

Align the steel stems into the guide sleeves and push the head restraint down until it locks.

MOVING THE SEAT BACKWARD AND FORWARD

WARNING: Do not adjust the driver seat or seat backrest when your vehicle is moving. This may result in sudden seat movement, causing the loss of control of your vehicle.

WARNING: Make sure the seat fully locks into place by rocking it backward and forward. Not securing the seat into the locked position can be dangerous in a crash and could cause serious personal injury or death.

WARNING: Accessory seat covers not released by Ford Motor Company could prevent the seatbelt from retracting correctly. This could cause the seatbelt to become slack which could increase the risk of injuries in a crash.

ADJUSTING THE SEAT BACKREST

WARNING: Reclining the seatback can cause an occupant to slide under the seat's seatbelt, resulting in severe personal injuries in the event of a crash.

WARNING: Do not place cargo or any objects behind the seatback before returning it to the original position.

ADJUSTING THE SEAT HEIGHT

ADJUSTING THE LUMBAR SUPPORT

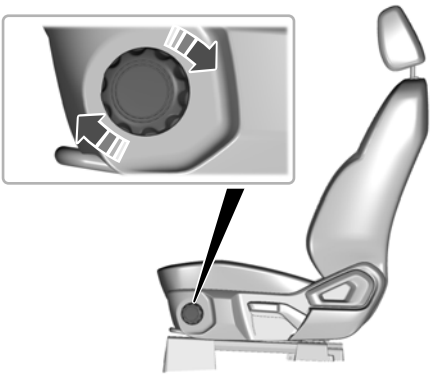

POWER SEATS

HEAD RESTRAINT COMPONENTS

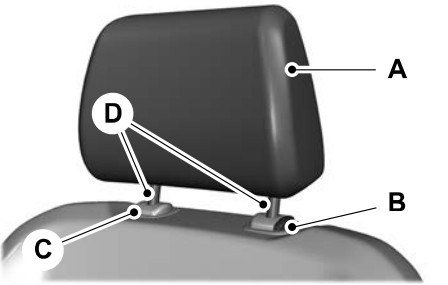

The head restraints consist of:

A	An energy absorbing head restraint.
B	Guide sleeve lock and release button.
C	Guide sleeve.
D	Two steel stems.

ADJUSTING THE HEAD RESTRAINT

WARNING: Fully adjust the head restraint before you sit in or operate your vehicle. This will help minimize the risk of neck injury in the event of a crash. Do not adjust the head restraint when your vehicle is moving.

WARNING: The head restraint is a safety device. Whenever possible it should be installed and properly adjusted when the seat is occupied. Failure to adjust the head restraint properly could reduce its effectiveness during certain impacts.

WARNING: Adjust the head restraints for all passengers before you drive your vehicle. This will help minimize the risk of neck injury in the event of a crash. Do not adjust the head restraints when your vehicle is moving.

Pull the head restraint up to raise it.

To lower the head restraint:

1. Press and hold the adjust and release button.
2. Push the head restraint down.

REMOVING THE HEAD RESTRAINT

1. Pull up the head restraint until it reaches its highest position.
2. Press and hold the adjust and unlock button.
3. Pull up the head restraint.

INSTALLING THE HEAD RESTRAINT

Align the steel stems into the guide sleeves and push the head restraint down until it locks.

MOVING THE SEAT BACKWARD AND FORWARD

WARNING: Do not adjust the driver seat or seat backrest when your vehicle is moving. This may result in sudden seat movement, causing the loss of control of your vehicle.

WARNING: Accessory seat covers not released by Ford Motor Company could prevent the seatbelt from retracting correctly. This could cause the seatbelt to become slack which could increase the risk of injuries in a crash.

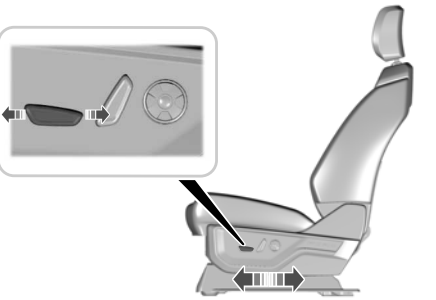

ADJUSTING THE SEAT CUSHION

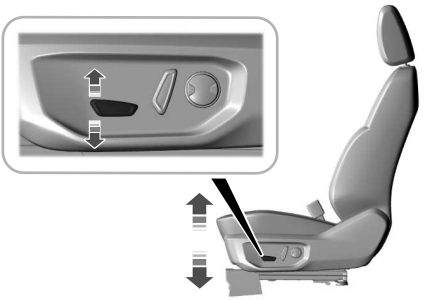

ADJUSTING THE SEAT BACKREST

WARNING: Reclining the seatback can cause an occupant to slide under the seat's seatbelt, resulting in severe personal injuries in the event of a crash.

Ranger (TRA, TRB) Vehicles Built From: 01-11-2024, CG4010en enGBR, Edition date: 202407, DOM

WARNING: Do not place cargo or any objects behind the seatback before returning it to the original position.

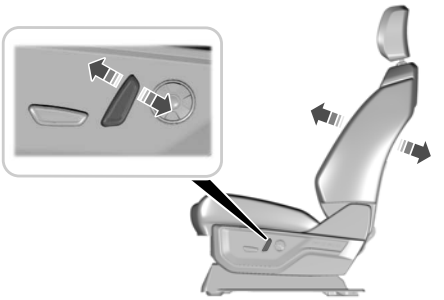

ADJUSTING THE SEAT HEIGHT

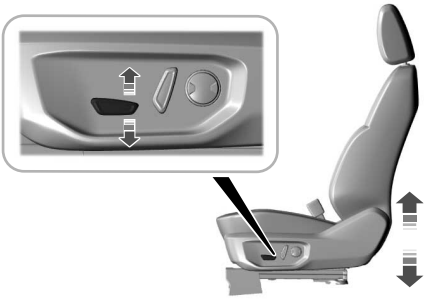

ADJUSTING THE LUMBAR SUPPORT

HEATED SEATS

HEATED SEAT PRECAUTIONS

WARNING: Use caution when using the heated seat if you are unable to feel pain to your skin because of advanced age, chronic illness, diabetes, spinal cord injury, medication, alcohol use, exhaustion or other physical conditions. The heated seat could cause burns even at low temperatures, especially if used for long periods of time. Failure to follow this instruction could result in personal injury.

WARNING: Do not poke sharp objects into the seat cushion or seat backrest. This could damage the heated seat element and cause it to overheat. Failure to follow this instruction could result in personal injury.

WARNING: Do not place anything on the seat that blocks the heat, for example a seat cover or a cushion. This could cause the seat to overheat. Failure to follow this instruction could result in personal injury.

Do not:

- Place heavy objects on the seat.
- Operate the heated seat if water or any other liquid spills on the seat. Allow the seat to dry.

SWITCHING THE HEATED SEATS ON AND OFF

The vehicle must be running to use this feature.

Press the seat symbol on the touchscreen to select your preferred heat level or off. Then cycle through the seat icon to control the heat intensity. The more indicators that display, the warmer the temperature of the seat.

Note: *The heated seats may remain on after you remote start your vehicle, based on your remote start settings.*

Note: *The heated seats may turn on when you start your vehicle if they were on when you switched your vehicle off.*

VENTILATED SEATS

VENTILATED SEAT PRECAUTIONS

Do not:

- Spill liquid on the front seats. This may cause the air vent holes to become blocked and not work properly.
- Place cargo or objects under the seats. They may block the air intake causing the air vents to not work properly.

SWITCHING THE VENTILATED SEATS ON AND OFF

The vehicle must be running to use this feature.

Press the seat symbol on the touchscreen to switch on the ventilated seats. Then cycle through the seat icon to control the fan speed. More indicator lights indicate higher fan speeds.

Note: *The ventilated seats switch on during a remote start if they are enabled.*

Note: *The ventilated seats may switch on when you start your vehicle if they were on when you previously switched your vehicle off.*

Note: *When you switch the climate control fan speed and the ventilated seats to their maximum settings, the ventilated seats provide increased cooling.*

Ranger (TRA, TRB) Vehicles Built From: 01-11-2024, CG4010en enGBR, Edition date: 202407, DOM

MANUAL SEATS

HEAD RESTRAINT COMPONENTS

Rear Seat Outermost Head Restraints

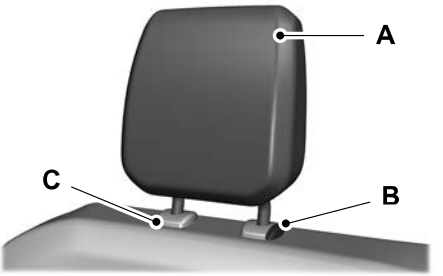

The head restraints consist of:

A An energy absorbing head restraint.

B Guide sleeve.

C Locking guide sleeve.

Rear Seat Center Head Restraint

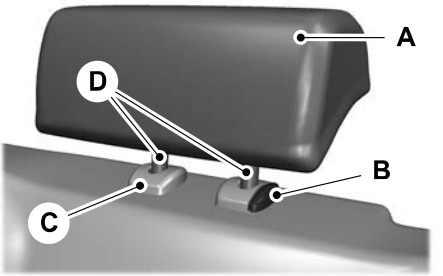

The head restraint consists of:

A An energy absorbing head restraint.

B Guide sleeve unlock and remove button.

C Guide sleeve adjust and release button.

D Two steel stems.

ADJUSTING THE HEAD RESTRAINT

WARNING: The head restraint is a safety device. Whenever possible it should be installed and properly adjusted when the seat is occupied. Failure to adjust the head restraint properly could reduce its effectiveness during certain impacts.

WARNING: Adjust the head restraints for all passengers before you drive your vehicle. This will help minimize the risk of neck injury in the event of a crash. Do not adjust the head restraints when your vehicle is moving.

Adjust the head restraint so that the top of it is level with the top of your head.

The outermost head restraints are non-adjustable.

Pull the center head restraint up to raise it.

To lower the center head restraint:

1. Press and hold the unlock and remove button.
2. Push the head restraint down.

REMOVING THE HEAD RESTRAINT

1. Fold the seat backrest forward before removing the head restraint.
2. Pull up the head restraint until it reaches its highest position.

3. Press and hold the adjust and release button and the unlock and remove button.
4. Pull up the head restraint.

INSTALLING THE HEAD RESTRAINT

1. Fold the seat backrest forward before installing the head restraint.
2. Align the steel stems into the guide sleeves and push the head restraint down until it locks.

FOLDING THE SEAT BACKREST

WARNING: Do not drive your vehicle with a seat that is unlatched or in the folded position. Failure to follow this instruction could result in personal injury or death in the event of a sudden stop or crash.

WARNING: Do not fold a seat if it is occupied. Failure to follow this instruction could result in personal injury.

WARNING: When folding the seat backrest down, take care not to get your fingers caught in the mechanism.

Pull the strap to fold the backrest forward.

Note: *Move the front seats forward to avoid interference between the front and rear seats. This provides more access to the back.*

UNFOLDING THE SEAT BACKREST

WARNING: When unfolding the seat, make sure that the seatbelts are not trapped behind the seat.

WARNING: Do not place cargo or any objects behind the seatback before returning it to the original position.

WARNING: Make sure that the seats and the seat backrests are secure and fully locked in their catches.

Pull the seat backrest up until it latches in the upright position.

Note: *We recommend that you push the seat backrest upright from the passenger side of the vehicle.*

Ranger (TRA, TRB) Vehicles Built From: 01-11-2024, CG4010en enGBR, Edition date: 202407, DOM

FOLDING THE SEATS

Pull the strap to fold the seat up.

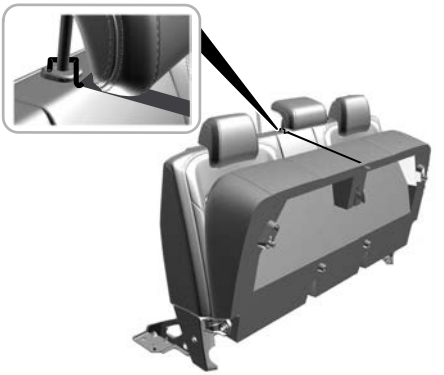

Hook the strap to the center head restraint.

UNFOLDING THE SEATS

WARNING: Make sure that cargo and other objects are not trapped under the seat cushion and that you return the seat cushion to the full-down position. Failure to do so may prevent the seat from operating properly, which could increase the risk of serious injury in a crash.

WARNING: Make sure that the seats and the seat backrests are secure and fully locked in their catches.

Unhook the strap from the head restraint, then pull the strap to lower the seat.

UNFOLDING THE SEAT ARMREST

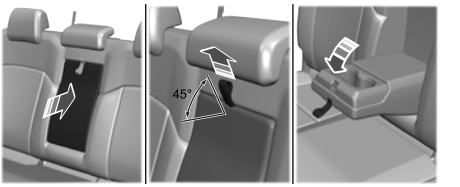

1. Grab the armrest strap while pushing the top of the armrest inward.
2. Pull the armrest strap up and out at a 45 degree angle.
3. Continue to pull down until you fully open the armrest.

WHAT IS THE REAR OCCUPANT ALERT SYSTEM

The rear occupant alert system monitors vehicle conditions and notifies you to check for rear seat occupants when you switch the ignition off. The notifications can be in the form of warnings inside the vehicle and sounding of the horn if activated for a short period of time.

HOW DOES THE REAR OCCUPANT ALERT SYSTEM WORK

The system monitors the activity of the buckle on the rear seatbelt and the opening and closing of the rear doors to indicate the potential presence of an occupant in the rear seat.

When ***Child Seat Installed*** is selected, the system monitors only the opening and closing of the rear doors to indicate the potential presence of an occupant in the rear seat.

When ***Child Seat Installed*** is not selected, the system monitors the rear seatbelt buckle activity and the opening and closing of the rear doors to indicate the potential presence of an occupant in the rear seat.

A message displays in the touchscreen and an audible warning sounds when you switch the ignition off after any of the following conditions have been met:

- A rear door is opened or closed while the ignition is on.
- You switch the ignition on within 15 minutes of a rear door opening and closing.
- You switch the ignition on within 15 minutes of the alert having displayed or sounded.

If you do not open a rear door within a short period of time of the message appearing in the center display, the first audible warning sounding and driver door open to close, the horn sounds for a short period of time.

Note: *Horn sounds only when the* ***Rear Occupant Alert*** *is set to* ***Alert & Horn****. If you change the setting, then there is no horn sound.*

REAR OCCUPANT ALERT SYSTEM PRECAUTIONS

WARNING: On hot days, the temperature inside the vehicle can rise very quickly. Exposure of people or animals to these high temperatures for even a short time can cause death or serious heat related injuries, including brain damage. Small children are particularly at risk.

WARNING: Do not leave children or pets unattended in your vehicle. Failure to follow this instruction could result in personal injury or death.

REAR OCCUPANT ALERT SYSTEM LIMITATIONS

The system does not detect the presence of objects or passengers in the rear seat. It monitors the activity of the buckle on the rear seatbelt and the opening and closing of the rear doors.

Note: *It is possible to receive an alert when there is no rear seat occupant, but alert conditions are met.*

Ranger (TRA, TRB) Vehicles Built From: 01-11-2024, CG4010en enGBR, Edition date: 202407, DOM

Note: *It is possible to receive no alert when there is an occupant in the rear seat, if alert conditions are not met. For example, if a rear seat occupant does not enter the vehicle through a rear door.*

REAR OCCUPANT ALERT SYSTEM SETTINGS

1. From the settings menu, press Vehicle. See **Center Display** (page 599).
2. Press Rear Occupant Alert.
3. Select Alert & Horn or Alert Only or Off.

Note: *The default setting is Alert Only.*

Note: *If your vehicle only has the On or Off option, the default setting is on.*

Note: *If you choose Alert only, the horn does not sound even when the alert conditions are met.*

Note: *Performing a vehicle system reset causes the system to switch to Alert Only or On again.*

Switching Child Seat Installed On and Off

When the system is switched on, it monitors the opening and closing of the rear doors to indicate the potential presence of an occupant in the rear seat.

1. From the settings menu, press Vehicle. See **Center Display** (page 599).
2. Press Rear Occupant Alert.
3. Switch Child Seat Installed on or off.

Note: *The default setting is on.*

Switch the system on when the child restraint is mounted on any of the following:

- Forward facing seat.
- Rear facing seat.
- Toddler in a LATCH system child seat.

Switch the system off when the child is using any of the following:

- Seatbelt.
- Booster seat.

Semiannual Reminder

When you switch the system off, a message appears every six months as a reminder that the system is off. You can switch the system back on or leave it off.

REAR OCCUPANT ALERT SYSTEM INDICATORS

Message
Check rear seats for occupants.

Displays when you switch the power off after the alert conditions are met.

The message displays for a short period of time. Press ***Close*** to acknowledge and remove the message.

Note: *Depending on your center display system version, the graphic may look different from what you see here.*

Ranger (TRA, TRB) Vehicles Built From: 01-11-2024, CG4010en enGBR, Edition date: 202407, DOM

REAR OCCUPANT ALERT SYSTEM AUDIBLE WARNINGS

The first audible warning is an alert tone within the vehicle, which sounds when you switch your vehicle off after the alert conditions are met. The warning sounds for a short period of time.

The second audible warning is from the horn. It sounds when you do not open a rear door within a short period of time of the message appearing in the center display, the first audible warning sounding, and driver door open to close. The warning sounds for a short period of time.

Ranger (TRA, TRB) Vehicles Built From: 01-11-2024, CG4010en enGBR, Edition date: 202407, DOM

WHAT IS THE MEMORY FUNCTION

The memory function recalls the driver seat position.

MEMORY FUNCTION PRECAUTIONS

WARNING: Before activating the memory seat, make sure that the area immediately surrounding the seat is clear of obstructions and that all occupants are clear of moving parts.

WARNING: Do not use the memory function when your vehicle is moving.

LOCATING THE MEMORY FUNCTION BUTTONS

The memory function buttons are on the driver door.

SAVING A PRESET POSITION

1. Switch the ignition on.
2. Adjust the memory features to your preferred position.
3. Press and hold the preferred preset button until you hear a single tone.

A confirmation message appears in the instrument cluster display.

You can save up to three preset memory positions at any time.

RECALLING A PRESET POSITION

Press and release a preset button.

Note: *You can recall a preset memory position when the ignition is off, or when you place the transmission in park (P) or neutral (N) if the ignition is on and the vehicle is not moving.*

Note: *Pressing any of the preset buttons or any memory feature control during a memory recall cancels the operation.*

LOCATING THE USB PORTS

Data Transfer USB Ports

The USB port is on the lower instrument panel below the climate control.

Note: *These USB ports can also charge devices.*

Note: *Not all USB ports in your vehicle have data transfer capabilities.*

Note: *We recommend using only USB-IF certified cables and adapters. Non-certified cables and adapters may not work.*

Charge Only USB Ports

The USB ports could be in the following locations:

- On the lower instrument panel.
- On the upper instrument panel.
- Inside the media bin.
- Inside the center console.
- On the rear of the center console.
- In the cargo area.
- On the windshield, behind the rear view mirror.

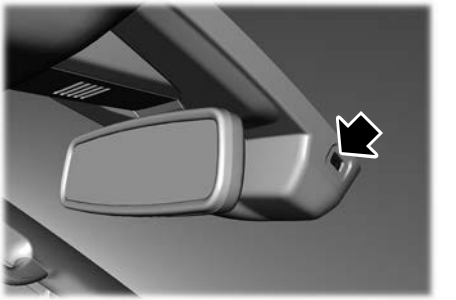

PLAYING MEDIA USING THE USB PORT

WARNING: Driving while distracted can result in loss of vehicle control, crash and injury. We strongly recommend that you use extreme caution when using any device that may take your focus off the road. Your primary responsibility is the safe operation of your vehicle. We recommend against the use of any hand-held device while driving and encourage the use of voice-operated systems when possible. Make sure you are aware of all applicable local laws that may affect the use of electronic devices while driving.

Connect your device to the USB port.

Press App Launcher on the touchscreen. Press Media App. See **Center Display** (page 599).

Press the USB option.

Note: *If USB device was not the previous source.*

Press the button to play a track. Press the button again to pause the track.

Ranger (TRA, TRB) Vehicles Built From: 01-11-2024, CG4010en enGBR, Edition date: 202407, DOM

Press the button to skip to the next track.

Press and hold the button to fast forward through the track.

Press the button once to return to the beginning of a track. Repeatedly press the button to return to previous tracks.

Press and hold the button to fast rewind.

CHARGING A DEVICE

Connect your device to the USB port.

Data Transfer USB Ports

You can charge your device through the data transfer USB port when SYNC is on.

Charge Only USB Ports

You can charge your device through the charge only USB port when the vehicle is in accessory mode or when the vehicle is running.

WHAT IS THE POWER OUTLET

The power outlet is a socket that connects an electrical device to your vehicle's power supply.

POWER OUTLET PRECAUTIONS

WARNING: Do not keep electrical devices plugged into the power outlet whenever the device is not in use. The outlet provides power when the vehicle is on. Failure to follow this instruction could result in personal injury.

WARNING: Do not use an extension cord or connect multiple devices to the power outlet. Doing so could result in overloading the power outlet. Failure to follow this instruction could result in fire, personal injury or property damage.

Note: *The power outlet provides up to 400 Watts when the ignition is on. This wattage is divided between multiple outlets when in use at the same time.*

Note: *The power outlet turns off when you switch off the ignition, or when the battery voltage drops below 11 volts.*

POWER OUTLET LIMITATIONS

You should not use the power outlet for these types of electric devices:

- Cathode ray tube type televisions.
- Motor loads, such as vacuum cleaners, electric saws or other electric power tools and compressor-driven refrigerators.
- Measuring devices which process precise data, such as medical equipment or measuring equipment.
- Other appliances requiring an extremely stable power supply, such as microcomputer-controlled electric blankets or touch sensor lamps.

Note: *Some devices may exceed the power rating on the device label when they are initially plugged-in and may require you to press the device power button more than one time in order to allow a soft start. After multiple attempts, if the device remains off, please consider that your device may require more than the available power.*

Note: *The power outlet provides full available power when the vehicle is in park (P). Power availability may be reduced when the vehicle is in drive (D). If more than one outlet is available in the vehicle, power is divided between the outlets that are in use at the same time.*

LOCATING THE POWER OUTLETS

The power outlet may be located on the rear of the center console or in the bed.

Ranger (TRA, TRB) Vehicles Built From: 01-11-2024, CG4010en enGBR, Edition date: 202407, DOM

Rear of the Center Console

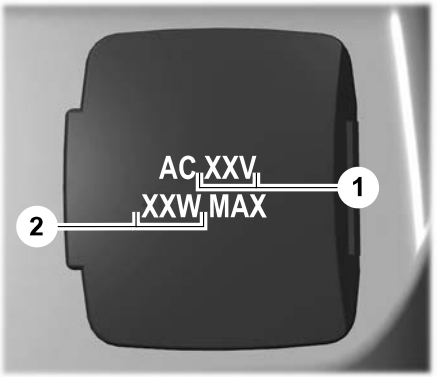

1. Maximum voltage.
2. Maximum wattage.

Note: *The power rating varies depending on your vehicle options.*

Note: *Do not plug in devices that exceed the power rating shown on the outlet cover.*

Note: *Make sure the plug is designed for the outlet. Do not force the plug into the receptacle.*

Bed Outlet

Note: *Depending on your vehicle options, the exterior outlet tray may or may not contain an on and off switch.*

Note: *Depending on your vehicle options, the exterior outlet tray may contain one or two outlets.*

POWER OUTLET INDICATORS

The power outlet indicator illuminates to let you know the status of the system.

Indicator Status	Description
On	When the indicator light is on, the outlet is providing power.
Off	When the indicator light is off, there is no power to the outlet.
Flashing	When the indicator light is flashing, the outlet is in a fault mode.

Fault mode

The power outlet temporarily turns off power if the device exceeds the watt limit.

1. Unplug your device.
2. Switch your vehicle off to let the system cool and reset the fault mode.
3. Switch your vehicle back on, but do not plug your device back in.
4. With your vehicle on, make sure the indicator light remains on.
5. Make sure your device does not exceed the power limits and then plug in your device.

Note: *If a fault occurs again, your device may exceed the capacity available from the power outlet.*

WHAT IS THE POWER OUTLET

The power outlet can power devices using a 12 V outlet adapter.

POWER OUTLET PRECAUTIONS

WARNING: Do not plug electrical devices into the power outlets that exceed the maximum power rating. Incorrect use of the power outlets can cause damage not covered by the vehicle warranty, and can result in fire or personal injury.

When you switch the vehicle on, you can use the power outlets to power 12 V appliances with a maximum current rating of 15 A.

To prevent damage to the vehicle's battery:

- Do not use the power outlets over the vehicle capacity of 12 V DC 180 W or a fuse could blow.
- Do not plug in any device that supplies power to the vehicle through the power outlets. This could result in damage to vehicle systems.
- Do not hang any accessory from the accessory plug. Always keep the power outlets caps closed when not in use.
- Do not insert objects other than an accessory plug into the power outlets.

To prevent the battery from running out of charge:

- Do not use the power outlets longer than necessary when the vehicle is off.
- Do not leave devices plugged in overnight or when you park your vehicle for extended periods.
- Using devices for extended periods may require starting and running the engine to recharge the battery.

LOCATING THE POWER OUTLETS

Power outlets may be in the following locations:

- Inside the center console.
- On the rear of the center console.

WHAT IS THE ONBOARD GENERATOR

The vehicle functions as a portable generator and can power devices that require up to the rating listed on the power outlet label.

ONBOARD GENERATOR PRECAUTIONS

WARNING: Do not connect any vehicle power outlets to any premises. This can create a backfeed to utility lines. Failure to follow this instruction could result in property damage, fire, electrical shock or death.

WARNING: Do not keep electrical devices plugged into the power outlet whenever the device is not in use. The outlet provides power when the vehicle is on. Failure to follow this instruction could result in personal injury.

WARNING: Do not start the engine in a closed garage or in other enclosed areas. Exhaust fumes are toxic. Always open the garage door before you start the engine. Failure to follow this instruction could result in personal injury or death.

WARNING: Exhaust leaks may result in entry of harmful and potentially lethal fumes into the passenger compartment. If you smell exhaust fumes inside your vehicle, have your vehicle inspected immediately. Do not drive if you smell exhaust fumes.

WARNING: The vehicle's engine runs while the generator is switched on. Running engines emit carbon monoxide. Only use the generator when the vehicle is outdoors. Failure to follow this instruction could result in personal injury or death.

WARNING: Do not use the onboard generator to power a towable item when your vehicle is in motion unless you are using Ford approved accessories.

When you switch the power outlets on, the vehicle power down timer is disabled and the vehicle continues to be powered on.

Note: *We recommend using region specific approved devices for use with the power outlet.*

Note: *Make sure that plugged in devices do not exceed the ratings displayed on the outlet covers.*

Note: *Make sure there is no damage to the outlets before driving your vehicle.*

Note: *Power could be limited during extreme hot or cold temperatures to optimize system performance.*

Note: *Close all outlet covers when not in use.*

Note: *Do not aim a water hose, power washer or high-powered spray nozzle directly at the power outlet cover when cleaning the bed.*

Note: *The gasoline engine may start and stop to provide power when the outlet is switched on.*

Note: *Make sure that objects are not blocking the inverter inlet and exhaust near the rear underseat storage compartment.*

Note: *The climate control system may turn on and power may be limited during extreme hot or cold temperatures to optimize system performance.*

Note: ***Pro Power Onboard*** *is available when your vehicle is charging. Using the power outlets while the vehicle is charging could increase the vehicle charging time.*

Note: *When the outlet is switched on and the vehicle is in park (P) the engine turns off 30 minutes after the low fuel warning is displayed. After the vehicle is turned off, generator mode only operates while driving or until the vehicle is refueled.*

Grounding Type

Neutral Floating

The neutral of the inverter generator is isolated from system ground.

Neutral Bonded

The neutral of the inverter generator is bonded to system ground. Connecting loads that also have neutral bonded to ground causes the ground fault detection to trip.

Note: *If additional grounding measures are required, consult with a qualified electrician.*

LOCATING THE OUTLETS

The power outlets are in the cabin and bed of the vehicle.

Rear of the Center Console

Bed Outlet

Note: *Depending on your vehicle options, the exterior outlet tray may or may not have a circuit breaker.*

Note: *The outlet may be on the left or right-hand side of the bed depending on the vehicle.*

Note: *Do not plug in devices that exceed the power rating shown on the outlet cover.*

Note: *Make sure the plug is designed for the outlet. Do not force the plug into the receptacle.*

ONBOARD GENERATOR INDICATORS

Power Outlet Status Indicator

The power outlet indicator illuminates to let you know the status of the system.

Indicator Status	Description
On	The power point is working and the vehicle is on.
Off	The power point is off and the vehicle is off.
Flashing	The power point is in fault mode.

Fault Mode

The power outlet temporarily turns off power if the device exceeds the watt limit.

1. Unplug your device.
2. Switch your vehicle off to let the system cool and reset the fault mode.
3. Switch your vehicle back on, but do not plug your device back in.
4. With your vehicle on, make sure the indicator remains on.
5. Make sure your device does not exceed the power limits.
6. Plug in your device

Note: *If a fault occurs again, your device may exceed the capacity available from the power outlet.*

Generator Mode Power Indicator

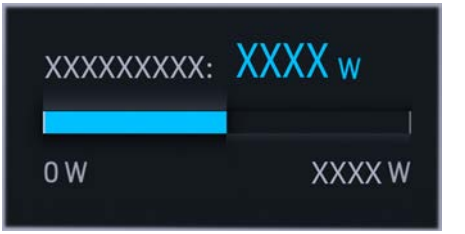

The generator mode power indicator displays the currently used power and total available power level on the touchscreen. When Generator Mode is switched off the indicator displays a reduced available power level. When generator mode is switched on the indicator displays the full available power.

Note: *Additional indicators may be available based on vehicle configuration.*

Note: *Maximum power may be reduced when the vehicle is in drive (D).*

SWITCHING THE OUTLETS ON AND OFF

Using the Center Display Screen

1. Start the vehicle. See **Starting and Stopping the Engine** (page 187).
2. From the app launcher menu, press Pro Power Onboard. See **Center Display** (page 599).

Using the Bed Controls

1. Start the vehicle. See **Starting and Stopping the Engine** (page 187).
2. Press the button to switch the power outlet on and off.

WHAT IS UTILITY IDLE MODE - VEHICLES WITH: FLIP KEY

Utility idle mode allows you to remove the key from the ignition and keep the vehicle and bed power point running.

SWITCHING UTILITY IDLE MODE ON AND OFF - VEHICLES WITH: FLIP KEY

Switching Utility Idle On

1. Start the vehicle. See **Starting and Stopping the Engine** (page 187).
2. From the app launcher menu, press Pro Power Onboard. See **Center Display** (page 599).
3. Press Generator Mode.
4. Press Utility Idle.
5. Turn the key to position ***0***.
6. Remove the key from the ignition.

Switching Utility Idle Off using the Key

1. Insert the key into the ignition.
2. Turn the key to position ***III***.

Switching Utility Idle Off using the Center Display Screen

1. Start the vehicle. See **Starting and Stopping the Engine** (page 187).
2. From the app launcher menu, press Pro Power Onboard. See **Center Display** (page 599).
3. Press Generator Mode.
4. Press Utility Idle.
5. Press Turn Vehicle Off.

WHAT IS GENERATOR MODE

Generator mode uses the vehicle engine to increase power to the bed power outlets up to the rating listed on the power outlet label.

SWITCHING GENERATOR MODE ON AND OFF

1. Start the vehicle. See **Starting and Stopping the Engine** (page 187).
2. From the app launcher menu, press Pro Power Onboard. See **Center Display** (page 599).
3. Press Generator Mode.

Note: *When the generator mode is off and the vehicle is on, you can power the devices up to 400W in the cabin through the low power mode.*

RESETTING GROUND FAULT DETECTION

After disconnecting all electrical loads the ground fault can be reset using the switches on the power point, on the instrument panel or on the touchscreen.

Use the controls on the touchscreen to test the ground fault detection circuit.

RESETTING THE CIRCUIT BREAKER - VEHICLES WITH: 220-240V 6.9KW POWER OUTLET

Cabin Outlet

To reset the circuit breaker after it has tripped, press the button on the rear of the center console.

Note: *In certain conditions the breaker may trip without notification.*

Bed Outlet

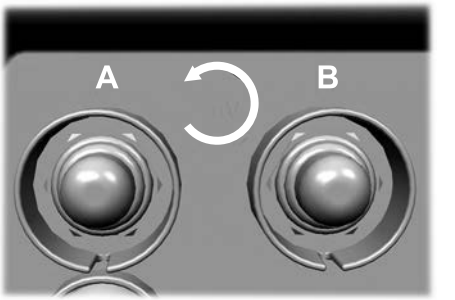

To reset the circuit breaker after it has tripped, press the button on the upper right area of the bed outlet. There are two circuit breaker buttons that correspond to the A and B outlets.

Note: *In certain conditions the breaker may trip without notification.*

ONBOARD GENERATOR – TROUBLESHOOTING

ONBOARD GENERATOR – INFORMATION MESSAGES

Message	Details
Item(s) plugged in exceeded the system's maximum capacity. Try unplugging one or more items and reset. See owner's manual for details.	Make sure that plugged in devices do not exceed the available power displayed. Devices could exceed the power rating shown on the device label when plugged in. Unplug the device and switch the vehicle on and off to reset the system.
Generator system is outside its operating temperature and capability is reduced. See owner's manual for details.	Power could be limited during extreme hot or cold temperatures to optimize the performance of the system.
Another power source is trying to supply power to your vehicle's AC outlets. Disconnect vehicle from that power source. See owner's manual for details.	Do not plug in any device that supplies power to the vehicle through the power outlets. This could result in damage to vehicle systems.
This button tests outlets for proper operation of ground fault detection. In a successful test, Pro Power Onboard detects the ground fault and turns off. See owner's manual for details.	The power outlet is in fault mode. Make sure that all devices are unplugged from the system. Use the controls on the touchscreen to reset the system. Switch your vehicle on and off if the touchscreen controls are unable to reset the system. Have your vehicle checked if these steps do not fix the fault.
Available power is reduced by current operating conditions. For better Pro Power Onboard performance, shift vehicle to park or charge the battery by either plugging in or driving in EV Charge mode.	Current environmental operating conditions are limiting Pro Power Onboard capability. To improve performance, try one or more of the following: Reduce Pro Power Onboard load by unplugging devices. Shift the transmission to park (P). Plug in and charge the battery. See **Charging Your Vehicle** (page 232). Prior to using Pro Power Onboard, drive the vehicle in EV Charge or EV Later mode to increase or save battery power. See **Plug-In Hybrid Electric Vehicle Drive Modes** (page 336).

ONBOARD GENERATOR – FREQUENTLY ASKED QUESTIONS - VEHICLES WITH: 220-240V 2.3KW POWER OUTLET

Why is there a warning about something being plugged into the bed power outlet when I do not have anything plugged in?

- One or more of the bed power outlet covers could be ajar or broken. Make sure the generator is off and check the outlet covers. Select OK on the instrument cluster display to acknowledge the warning.

Why can I not shift my vehicle out of park (P)?

- Make sure the bed power outlet covers are closed and not damaged. Press OK on the instrument cluster display to acknowledge the warning to be able to shift out of park (P).

What do I do when my instrument cluster display is malfunctioning and I cannot acknowledge the warning to put the vehicle in drive (D).

- Power the vehicle off and make sure nothing is plugged into the bed power outlets and all outlet covers are closed. Start the vehicle and select OK on the instrument cluster display to acknowledge the warning. Have your vehicle serviced soon.

Why do I get a ground fault detection after I wash out the bed?

- If the power outlet gets wet, a ground fault could occur. See **Resetting Ground Fault Detection** (page 179).

ONBOARD GENERATOR – FREQUENTLY ASKED QUESTIONS - VEHICLES WITH: 220-240V 6.9KW POWER OUTLET

Why is there a warning about something being plugged into the bed power outlet when I do not have anything plugged in?

- One or more of the bed power outlet covers could be ajar or broken. Make sure the generator is off and check the outlet covers. Select OK on the instrument cluster display to acknowledge the warning.

Why can I not shift my vehicle out of park (P)?

- Make sure the bed power outlet covers are closed and not damaged. Press OK on the instrument cluster display to acknowledge the warning to be able to shift out of park (P).

What do I do when my instrument cluster display is malfunctioning and I cannot acknowledge the warning to put the vehicle in drive (D).

- Power the vehicle off and make sure nothing is plugged into the bed power outlets and all outlet covers are closed. Start the vehicle and select OK on the instrument cluster display to acknowledge the warning. Have your vehicle serviced soon.

Why do I get a ground fault detection after I wash out the bed?

- If the power outlet gets wet, a ground fault could occur. See **Resetting Ground Fault Detection** (page 179).

Why is the power outlet not working?

- In certain conditions, the circuit breaker can trip without notification. The circuit breaker may need to be reset. See **Resetting the Circuit Breaker** (page 179).

WHAT IS THE WIRELESS ACCESSORY CHARGER

The wireless accessory charger allows you to charge one compatible Qi wireless charging device on the charging area.

WIRELESS ACCESSORY CHARGER PRECAUTIONS

WARNING: Wireless charging devices can affect the operation of implanted medical devices, including cardiac pacemakers. If you have any implanted medical devices, we recommend that you consult with your physician.

WARNING: Remove all metal objects like coins and keys from the charging surface and remove any metal objects attached to your mobile phone before placing the device on the charging surface. Some mobile devices or cases may attract metal objects. Metal objects on the charging surface or attached to the phone may become hot while charging is active. If an object is left on or near the charging surface or attached to the phone while the device is charging, let the objects cool before removing to prevent personal injury.

Keep the charging area clean and remove foreign objects prior to charging a device.

Do not place items with a magnetic strip or radio-frequency identification chip, for example passports, parking tickets, transportation passes or credit cards, near the charging area when charging a device. Damage could occur to the magnetic strip or radio-frequency identification chip.

Do not place metal objects, for example remote controls, coins and candy wrappers, on or near the charging area when charging a device. Metal objects may heat up and degrade the charging performance, in addition to causing interruptions in charging.

Charging could be interrupted, degraded, or could stop if any of the following occur:

- The system detects a foreign object.
- The device is misaligned on the charging area.
- The device moves on the active charging area when the vehicle is in motion.
- The vehicle ambient temperature is too high.
- You attempt to charge a non-Qi compatible device on the wireless charger.

Note: *During charging, the device and the charger could heat up, this is normal. If the battery gets hotter than usual, the device may stop charging.*

LOCATING THE WIRELESS ACCESSORY CHARGER

The charging area is in the front console below the instrument panel.

CHARGING A WIRELESS DEVICE

Place the device on the center of the charging surface with the charging side down. The charging stops after your device reaches a full charge.

You can use the charger when the vehicle is in accessory mode, when the vehicle is running or when the touchscreen is on.

Ranger (TRA, TRB) Vehicles Built From: 01-11-2024, CG4010en enGBR, Edition date: 202407, DOM

Displays on the status bar when wireless charging is in progress.

Displays on the status bar when wireless charging has been interrupted.

Note: *The charging performance may be affected if your device is in a case. It may be necessary to remove the case to wirelessly charge your device.*

Note: *Software and firmware updates may affect device compatibility, including the use of unofficial software or firmware. You should verify charging functionality with your specific devices in-vehicle.*

CUP HOLDERS

LOCATING THE CUP HOLDERS

WARNING: Use caution when stowing items or hot drinks in the cup holders. Items could become loose or spill during hard braking, acceleration or crashes. Failure to follow this instruction could result in personal injury.

Instrument Panel

Press the cup symbol to open the cup holder.

Rear Seat Armrest

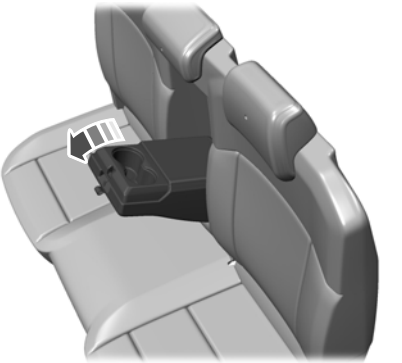

Fold the armrest down to use the armrest and cup holder.

GLOVE COMPARTMENT

OPENING THE GLOVE COMPARTMENT

Pull the latch toward the driver side to open.

Ranger (TRA, TRB) Vehicles Built From: 01-11-2024, CG4010en enGBR, Edition date: 202407, DOM

CENTER CONSOLE

OPENING THE CENTER CONSOLE

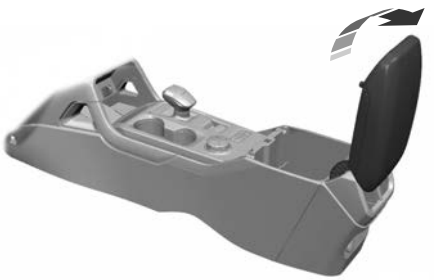

Pull the latch to open the center console.

UNDER SEAT STORAGE

LOCATING THE UNDER SEAT STORAGE COMPARTMENT - EXCLUDING: RAPTOR

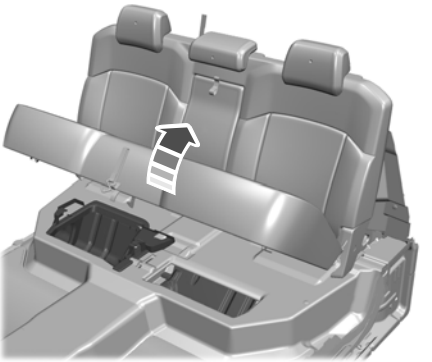

Lift the seat to access the storage. See **Folding the Seats** (page 164).

LOCATING THE UNDER SEAT STORAGE COMPARTMENT - RAPTOR

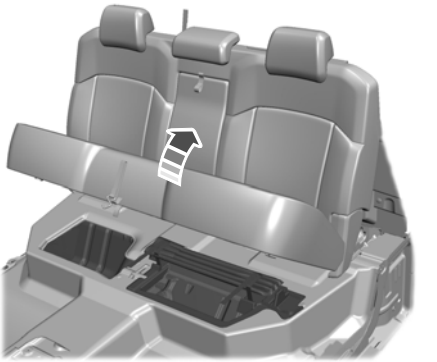

Lift the seat to access the storage. See **Folding the Seats** (page 164).

GLASSES HOLDER

LOCATING THE GLASSES HOLDER

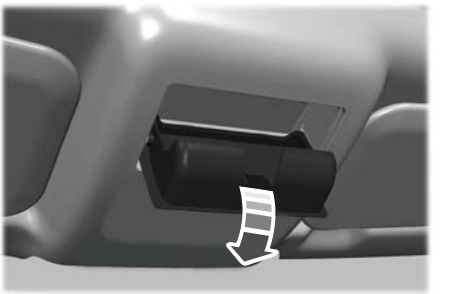

The glasses holder is in the overhead console. Press near the rear edge of the door to open.

STARTING AND STOPPING THE ENGINE – PRECAUTIONS

WARNING: Do not use starting fluid, for example ether, in the air intake system. Such fluid could cause immediate explosive damage to the engine and possible personal injury.

WARNING: Exhaust leaks may result in entry of harmful and potentially lethal fumes into the passenger compartment. If you smell exhaust fumes inside your vehicle, have your vehicle inspected immediately. Do not drive if you smell exhaust fumes.

WARNING: Extended idling at high engine speeds can produce very high temperatures in the engine and exhaust system, creating the risk of fire or other damage.

WARNING: Do not park, idle or drive your vehicle on dry grass or other dry ground cover. The emission system heats up the engine compartment and exhaust system, creating the risk of fire.

WARNING: Do not start the engine in a closed garage or in other enclosed areas. Exhaust fumes are toxic. Always open the garage door before you start the engine. Failure to follow this instruction could result in personal injury or death.

If you stop your vehicle and then leave the engine idling for long periods, we recommend that you do one of the following:

- Open the windows at least 3 cm (1 in).
- Set your climate control to outside air.

IGNITION SWITCH

Note: *Make sure the key is clean before inserting it into any lock cylinder.*

Note: *Do not leave the key in the ignition for an extended period of time when the engine is not running. This is to prevent the vehicle battery from losing charge.*

Switching the Ignition Off

Turn the key to position ***0***.

Switching the Ignition to Accessory Mode

Turn the key to position ***I***. Electrical accessories, for example the radio, operate without the engine running.

Switching the Ignition On

Turn the key to position ***II***. All electrical circuits and accessories are operational and the warning lamps and indicators illuminate.

Ranger (TRA, TRB) Vehicles Built From: 01-11-2024, CG4010en enGBR, Edition date: 202407, DOM

PUSH BUTTON IGNITION SWITCH

Switching the Ignition Off

When the ignition is on or in accessory mode, press the push button ignition switch once without your foot on the brake pedal.

Switching the Ignition to Accessory Mode

When the ignition is off, press the push button ignition switch once without your foot on the brake pedal.

All electrical circuits and accessories are operational and the warning lamps and indicators illuminate.

Note: *Your vehicle has a battery saver feature that shuts your vehicle off when it detects a certain amount of battery drain, or after approximately 30 minutes of inactivity in accessory mode.*

Note: *The system may not function if the passive key is close to metal objects or electronic devices, for example keys or a cell phone.*

Note: *You need a valid passive key inside your vehicle to switch the ignition on and start the engine.*

STARTING THE ENGINE

STARTING A GASOLINE ENGINE

Before starting your vehicle, check the following:

- Make sure that the parking brake is on.
- Make sure that the transmission is in park (P) for automatic transmissions or neutral (N) for manual transmissions.

1. Fully press the brake pedal for automatic transmissions or clutch pedal for manual transmissions.

Note: *Do not touch the accelerator pedal.*

2. Press the push button ignition switch.

Note: *The engine may continue cranking for up to 15 seconds or until it starts.*

Note: *The engine takes longer to start at lower temperatures. It may crank for several seconds when very cold.*

STARTING A DIESEL ENGINE - VEHICLES WITH: PUSH BUTTON START

Before starting your vehicle, check the following:

- Make sure that the parking brake is on.
- Make sure that the transmission is in park (P) for automatic transmissions or neutral (N) for manual transmissions.

1. Fully press the brake pedal for automatic transmissions or clutch pedal for manual transmissions.

Note: *Do not touch the accelerator pedal.*

2. Press the push button ignition switch.

Note: *The engine may continue cranking for up to 15 seconds or until it starts.*

Note: *The engine takes longer to start at lower temperatures. It may crank for several seconds when very cold.*

Glow Plug Indicator

The engine does not start until the glow plug indicator turns off. This may take several seconds in extremely cold conditions.

STARTING A DIESEL ENGINE - VEHICLES WITHOUT: PUSH BUTTON START

Before starting your vehicle, check the following:

- Make sure that the parking brake is on.
- Make sure that the transmission is in park (P) for automatic transmissions or neutral (N) for manual transmissions.

1. Turn the key to position ***II***.

Note: *Wait until the glow plug indicator turns off.*

2. Fully press the brake pedal for automatic transmissions or clutch pedal for manual transmissions.

Note: *Do not touch the accelerator pedal.*

3. Turn the key to position ***III***. Release the key and wait until the engine starts.

Note: *The engine may continue cranking for up to 15 seconds or until it starts.*

Note: *The engine takes longer to start at lower temperatures. It may crank for several seconds when very cold.*

Glow Plug Indicator

If it illuminates, wait until the glow plug indicator turns off before starting the engine.

STARTING A HYBRID ELECTRIC VEHICLE SYSTEM - VEHICLES WITHOUT: PUSH BUTTON START

Before starting your vehicle, check the following:

- The parking brake is on.
- The transmission is in park (P).

1. Press the brake pedal.

Note: *Do not touch the accelerator pedal.*

2. Turn the key to position ***III***.

READY When you start your vehicle, a green indicator illuminates in the instrument cluster letting you know that your vehicle is ready for driving. Since your vehicle is equipped with a silent key start, the engine may not start when your vehicle starts.

When the engine starts for the first time, the idle speed increases to help warm up the engine. If the idle speed does not decrease, have your vehicle checked by an authorized dealer.

STARTING A HYBRID ELECTRIC VEHICLE SYSTEM - VEHICLES WITH: PUSH BUTTON START

Before starting your vehicle, check the following:

- Make sure the parking brake is on.
- Make sure the transmission is in park (P).

Note: *Do not touch the accelerator pedal.*

1. Fully press the brake pedal.

2. Press the push button ignition switch.

READY When you start your vehicle, a green indicator appears in the instrument cluster letting you know that your vehicle is ready for driving. Since your vehicle is equipped with a silent key start, the engine may not start when your vehicle starts.

When the engine starts for the first time on your drive, the idle speed increases, this helps warm up the engine. If the engine idle speed does not decrease, have your vehicle checked by an authorized dealer.

The system does not function if:

- The passive key frequencies are jammed.
- The key battery has no charge.

RESTARTING THE ENGINE AFTER STOPPING IT

The system allows you to start the engine within 10 seconds of switching it off, even if it does not detect a valid passive key.

Within 10 seconds of switching the engine off, fully press the brake pedal and press the push button ignition switch. After 10 seconds, you can no longer start the engine if the system does not detect a valid passive key.

When you start the engine, it remains running until you press the push button ignition switch, even if your vehicle does not detect a valid passive key. If you open and close a door when the engine is running, the system searches for a valid passive key.

STOPPING THE ENGINE

STOPPING THE ENGINE WHEN YOUR VEHICLE IS STATIONARY - VEHICLES WITHOUT: PUSH BUTTON START

1. Make sure that the transmission is in park (P) for automatic transmissions or neutral (N) for manual transmissions.
2. Apply the parking brake.
3. Wait until the engine reaches idle speed.

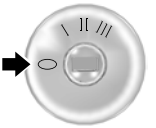

4. Turn the key to position ***0***.

STOPPING THE ENGINE WHEN YOUR VEHICLE IS STATIONARY - VEHICLES WITH: PUSH BUTTON START

1. Make sure that the transmission is in park (P) for automatic transmissions or neutral (N) for manual transmissions.
2. Apply the parking brake.
3. Wait until the engine reaches idle speed.

4. Press the push button ignition switch.

STOPPING THE ENGINE WHEN YOUR VEHICLE IS MOVING - VEHICLES WITHOUT: PUSH BUTTON START

WARNING: Switching off the engine when your vehicle is still moving results in a significant decrease in braking assistance. Higher effort is required to apply the brakes and to stop your vehicle. A significant decrease in steering assistance could also occur. The steering does not lock, but higher effort could be required to steer your vehicle. When you switch the ignition off, some electrical circuits, for example airbags, also turn off. If you unintentionally switch the ignition off, shift into neutral (N) and restart the engine.

Only in case of emergency, do the following.

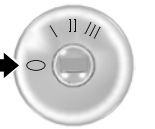

1. Turn the key to position ***0***.
2. Shift into neutral (N) and use the brakes to safely bring your vehicle to a complete stop.
3. Make sure that the transmission is in park (P) for automatic transmissions or neutral (N) for manual transmissions.
4. Apply the parking brake.

STOPPING THE ENGINE WHEN YOUR VEHICLE IS MOVING - VEHICLES WITH: PUSH BUTTON START

WARNING: Switching off the engine when your vehicle is still moving results in a significant decrease in braking assistance. Higher effort is required to apply the brakes and to stop your vehicle. A significant decrease in steering assistance could also occur. The steering does not lock, but higher effort

could be required to steer your vehicle. When you switch the ignition off, some electrical circuits, for example airbags, also turn off. If you unintentionally switch the ignition off, shift into neutral (N) and restart the engine.

Only in case of emergency, do the following.

1. Press and hold the push button ignition switch until the engine stops, or press it three times within two seconds.
2. Shift into neutral (N) and use the brakes to safely bring your vehicle to a complete stop.
3. Make sure that the transmission is in park (P) for automatic transmissions or neutral (N) for manual transmissions.
4. Apply the parking brake.

AUTOMATIC ENGINE STOP

WHAT IS AUTOMATIC ENGINE STOP

Automatic engine stop is a feature that switches the engine off if it has been idling for an extended period to help you save fuel.

HOW DOES AUTOMATIC ENGINE STOP WORK

Automatic engine stop turns the engine off. The ignition also turns off in order to save battery power. Before the engine shuts down, a message appears in the information display showing a timer counting down. If you do not intervene within 30 seconds, the engine shuts down. Another message appears in the information display to inform you that the engine has shut down in order to save fuel. Start your vehicle as you normally do.

SWITCHING AUTOMATIC ENGINE STOP ON AND OFF

1. From the settings menu, press Vehicle. See **Center Display** (page 599).
2. Switch 30min Max Idle on or off.

Note: *You cannot permanently switch off the automatic shutdown. If you switch it off, it turns on each time you switch the ignition on.*

OVERRIDING AUTOMATIC ENGINE STOP

You can stop the engine shutdown, or reset the timer, at any point before the 30-second countdown has expired by doing any of the following:

- Pressing the brake pedal or accelerator pedal.
- Pressing the **OK** or **RESET** button during the countdown.

Note: *You cannot permanently switch off the automatic engine shutdown feature. When you switch it off temporarily, it turns on at the next ignition cycle.*

Ranger (TRA, TRB) Vehicles Built From: 01-11-2024, CG4010en enGBR, Edition date: 202407, DOM

ACCESSING THE PASSIVE KEY BACKUP POSITION

If you are unable to start your vehicle, locate the backup slot at the bottom of the armrest bin.

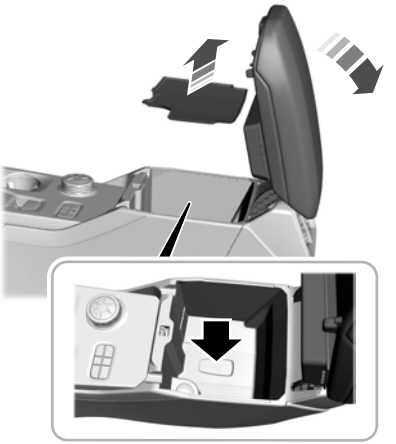

Note: *Make sure to place the key properly into the backup slot.*

Place the key into the backup slot.

With the key in the backup slot, press the brake pedal, then press the push button ignition switch to start your vehicle.

STARTING AND STOPPING THE ENGINE – TROUBLESHOOTING

STARTING AND STOPPING THE ENGINE – WARNING LAMPS

Malfunction Indicator Lamp

If it illuminates when the engine is running, the on-board diagnostics system is detecting a malfunction of the vehicle emission control system.

If it flashes, engine misfire could be occurring. Increased exhaust gas temperatures could damage the catalytic converter or other vehicle components. Avoid heavy acceleration and deceleration, and have your vehicle checked as soon as possible.

Powertrain Warning Lamp

If it illuminates when the engine is running, this indicates a powertrain or four-wheel drive fault. If it flashes when you are driving, immediately reduce the vehicle speed. Avoid heavy acceleration and deceleration, and have your vehicle checked as soon as possible.

If both lamps illuminate when the engine is running, stop your vehicle as soon as it is safe to do so. Continuing to drive your vehicle could cause reduced power or the engine to stop. Switch the ignition off and attempt to restart the engine. Have your vehicle checked as soon as possible.

Ranger (TRA, TRB) Vehicles Built From: 01-11-2024, CG4010en enGBR, Edition date: 202407, DOM

Oil Pressure Warning Lamp

It illuminates when you switch the ignition on. If it illuminates when the engine is running, this indicates a malfunction. Stop your vehicle and switch the engine off. Check the engine oil level. If the oil level is sufficient, this indicates a system malfunction. Have your vehicle checked as soon as possible.

STARTING AND STOPPING THE ENGINE – INFORMATION MESSAGES

Message	Action
Cranking time exceeded	Displays if you exceed the starting time limit. You cannot attempt to start the engine for 15 minutes. If you cannot start the engine after 15 minutes passes, have your vehicle immediately checked.
Starting system malfunction	Displays if you are unable to start your vehicle with a correctly coded key. The system has detected a fault that requires service. Have your vehicle checked as soon as possible.
No key detected	Displays if the system does not detect a valid passive key.

Ranger (TRA, TRB) Vehicles Built From: 01-11-2024, CG4010en enGBR, Edition date: 202407, DOM

STARTING AND STOPPING THE ENGINE – FREQUENTLY ASKED QUESTIONS - DIESEL, VEHICLES WITHOUT: PUSH BUTTON START

Why is the engine idle speed high when I start the engine?

- The speed the engine idles immediately after starting is optimized to minimize vehicle emissions and maximize cabin comfort and fuel economy.

Why is the engine not cranking?

The engine will not crank if:

- The vehicle battery does not have sufficient charge.
- The brake pedal is not pressed for automatic transmissions or the clutch pedal is not pressed for manual transmissions.
- The transmission is not in the park (P) or neutral (N) for automatic transmissions.
- The starting system has been disabled after multiple attempts of starting the engine.

What should I do if the starting system is disabled?

- You can only attempt to start the engine for a set number of times before the starting system temporarily disables. If you exceed the limit, a message may appear and you need to wait at least 15 minutes to start the engine again.

Why do I experience different driving characteristics?

- If you disconnect the battery, your vehicle may exhibit some unusual driving characteristics for approximately 8 km (5 mi) after you reconnect it. This is because the engine management system must realign itself with the engine. You can disregard any unusual driving characteristics during this period.

STARTING AND STOPPING THE ENGINE – FREQUENTLY ASKED QUESTIONS - DIESEL, VEHICLES WITH: PUSH BUTTON START

Why is the engine idle speed high when I start the engine?

- The speed the engine idles immediately after starting is optimized to minimize vehicle emissions and maximize cabin comfort and fuel economy.

Why is the engine not cranking?

The engine will not crank if:

- The system does not detect a valid passive key.
- The passive key battery has no charge.
- The vehicle battery does not have sufficient charge.
- The brake pedal is not pressed for automatic transmissions or the clutch pedal is not pressed for manual transmissions.
- The transmission is not in the park (P) or neutral (N) for automatic transmissions.
- The starting system has been disabled after multiple attempts of starting the engine.

What should I do if the starting system is disabled?

- You can only attempt to start the engine for a set number of times before the starting system temporarily disables. If you exceed the limit, a message may appear and you need to wait at least 15 minutes to start the engine again.

Why do I experience different driving characteristics?

- If you disconnect the battery, your vehicle may exhibit some unusual driving characteristics for approximately 8 km (5 mi) after you reconnect it. This is because the engine management system must realign itself with the engine. You can disregard any unusual driving characteristics during this period.

Why does the system not detect a passive key?

- If the system does not detect a passive key and you are unable to start the engine, insert the passive key into the backup position and press the push button ignition switch to start the engine. See **Accessing the Passive Key Backup Position** (page 193).

STARTING AND STOPPING THE ENGINE – FREQUENTLY ASKED QUESTIONS - GASOLINE

Why is the engine idle speed high when I start the engine?

- The speed the engine idles immediately after starting is optimized to minimize vehicle emissions and maximize cabin comfort and fuel economy.

Why is the engine not cranking?

The engine will not crank if:

- The system does not detect a valid passive key.
- The passive key battery has no charge.
- The vehicle battery does not have sufficient charge.
- The brake pedal is not pressed for automatic transmissions or the clutch pedal is not pressed for manual transmissions.
- The transmission is not in the park (P) or neutral (N) for automatic transmissions.
- The starting system has been disabled after multiple attempts of starting the engine.

What should I do if the starting system is disabled?

- You can only attempt to start the engine for a set number of times before the starting system temporarily disables. If you exceed the limit, a message may appear and you need to wait at least 15 minutes to start the engine again.

What should I do if the engine does not start?

- If you cannot start the engine after three attempts, wait 10 seconds and do the following:

1. Fully press the brake pedal for automatic transmissions or clutch pedal for manual transmissions.

Note: *Make sure that the parking brake is applied.*

Note: *Make sure that the transmission is in park (P) or neutral (N) for automatic transmissions.*

2. Fully press and hold the accelerator pedal.
3. Press the push button ignition switch. See **Push Button Ignition Switch** (page 188).

Note: *The engine cranks for a short period of time and then stops.*

4. Release the accelerator pedal.
5. Press the push button ignition switch. See **Push Button Ignition Switch** (page 188).

Why do I experience different driving characteristics?

- If you disconnect the battery, your vehicle may exhibit some unusual driving characteristics for about 8 km (5 mi) after you reconnect it. This is because the engine management system must realign itself with the engine. You can disregard any unusual driving characteristics during this period.

Why does the system not detect a passive key?

- If the system does not detect a passive key and you are unable to start the engine, insert the passive key into the backup position and press the push button ignition switch to start the engine. See **Accessing the Passive Key Backup Position** (page 193).

STARTING AND STOPPING THE ENGINE – FREQUENTLY ASKED QUESTIONS - HYBRID ELECTRIC VEHICLE (HEV)

Why does the engine not crank?

- When you start your vehicle, a green indicator light appears in the instrument cluster letting you know that your vehicle is ready for driving. Since your vehicle is equipped with a silent key start, the engine may not start when your vehicle starts.

Why is the engine speed high when the engine first starts?

- When the engine starts for the first time on your drive, the idle speed increases, this helps to warm up the engine. If the engine idle speed does not slow down, have your vehicle checked by an authorized dealer.

Why can I not start my vehicle when the high voltage battery is charged?

- Your vehicle has a high voltage to low voltage energy transfer feature that keeps the 12-volt battery charged by the high voltage battery. However 12-volt battery depletion can still occur, and in such case you are unable to start your vehicle. See **12V Battery** (page 494).

Why does the system not detect a passive key?

- If the system does not detect a passive key and you are unable to start your vehicle, insert the passive key into the backup position and press the push button ignition switch to start your vehicle. See **Accessing the Passive Key Backup Position** (page 193).

Ranger (TRA, TRB) Vehicles Built From: 01-11-2024, CG4010en enGBR, Edition date: 202407, DOM

A plug-in hybrid electric vehicle combines a gasoline engine with an electric motor and rechargeable high voltage battery allowing you to use only electricity to power your vehicle.

Charging your vehicle adds electrical energy that propels the vehicle. Regularly plug in your vehicle to get optimal electric-only range capability from the high voltage battery. The system maximizes the use of electric-only operation in normal drive mode whenever possible. System conditions could require the engine to operate when necessary.

When the electric-only range reaches zero, the powertrain system switches to hybrid operation. This means that you have depleted the energy you gained from plugging in and charging your vehicle. Both the gasoline engine and electric motor power your vehicle and maximize fuel economy during hybrid operation. You receive some electric-only driving with hybrid operation as the powertrain system maintains the high voltage battery charge within functional limits.

Plug-In Hybrid Electric Vehicle Driving Characteristics

The gasoline engine starts and stops to provide power when required and to save fuel when not needed. Restarting your vehicle is not required. Simply step on the accelerator when you are ready to drive. When coasting at low speeds, coming to a stop or standing, the gas engine normally shuts down and your vehicle operates in electric-only mode.

Conditions that may cause the gasoline engine to start or remain running include:

- Considerable vehicle acceleration.
- Driving uphill.
- The high voltage battery charge level is low.
- Heating or cooling the vehicle interior in high or low outside temperatures.
- The gasoline engine is below normal operating temperature.
- Towing a trailer.
- Certain drive modes could cause the engine to run. See **What Is Drive Mode Control** (page 335).

Note: *Having your engine running is not always an indication of inefficiency. In some cases, it is actually more efficient than driving in electric mode.*

Your plug-in hybrid electric vehicle has several EV drive modes to enhance your driving experience.

Your hybrid vehicle also comes with standard hydraulic braking and regenerative braking. Regenerative braking is performed by your transmission and captures brake energy and stores it in the high voltage battery.

You could also notice that your engine continues to run instead of shutting off during extended downhill driving. The engine stays on during this engine braking but is not using any fuel.

You could also hear a slight whine or whistle when operating your vehicle. This is the normal operation of the electric motor in the hybrid system.

Plug-In Hybrid Electric Vehicle Indicators

READY When you start your vehicle, a green ready indicator light appears in the instrument cluster letting you know that your vehicle is ready for driving.

The engine may not start because your vehicle has a silent key start feature. This fuel saving feature allows your vehicle to be ready to drive without requiring the gas engine to be running.

Ranger (TRA, TRB) Vehicles Built From: 01-11-2024, CG4010en enGBR, Edition date: 202407, DOM

The indicator remains on when your vehicle is on, whether the engine is running or not, to indicate your vehicle is capable of movement using the electric motor, gas engine or both.

Typically, the engine does not start unless the vehicle is cold, a climate control change is requested or you press the accelerator pedal.

Plug-In Hybrid Electric Vehicle Information – Warning Lamps

Illuminates if your vehicle's electrical system requires service to identify the cause for your vehicle to shut down or enter a limited operating mode. A message may appear in the instrument cluster display. Have your vehicle checked as soon as possible.

Plug-In Hybrid Electric Vehicle Information – Information Messages

Message	Action
Vehicle plugged in?	Your vehicle needs confirmation that you unplugged it before allowing a start. You must make sure your vehicle is unplugged and you respond to the message prompt before starting your vehicle.
Unplug prior to starting vehicle	Your vehicle detects it is still plugged in after you attempt to start it.
Engine enabled due to defrost setting	Your vehicle enables the engine due to the climate control defrost setting. This is normal operation.
Change EV mode for full defrost heat	Select either EV Later or EV Auto or EV Charge to enable full defrost. The engine may run to provide more cabin heat.
Engine enabled for system performance	Your vehicle enables the engine for system performance. This is normal operation.

Ranger (TRA, TRB) Vehicles Built From: 01-11-2024, CG4010en enGBR, Edition date: 202407, DOM

Message	Action
Press OK to enable engine	You can press OK to enable the engine temporarily for increased performance when in EV Now mode.
In neutral depletes HV battery. Shift out of neutral for full vehicle function.	Displays when the vehicle is in neutral (N) gear position with the engine running and you also select low (L) position on the shifter to enter temporary neutral mode. See **Temporary Neutral Mode** (page 254). Prolonged idling in neutral (N) results in engine idle instability and battery depletion. Shift out of neutral (N) to maintain full vehicle function.
Stop safely now	Displays when a malfunction occurs in the high voltage electric system. Stop your vehicle as soon as it is safe to do so. Have your vehicle checked as soon as possible.

LOW ENGINE USE MODE

Low engine use mode maintains proper engine lubrication at sufficient temperature and activates when you drive your vehicle with limited engine operation.

When in low engine use mode, your vehicle runs the engine as necessary. When low engine use mode begins, a message appears in the instrument cluster display. If low engine use mode does not complete before you switch your vehicle off, it continues the next time you start your vehicle and the message reappears.

Note: *EV Now mode is not available when in low engine use mode.*

Note: *Cold temperatures affect the engine warm up time and the low engine use mode may operate more frequently.*

Note: *An oil change is not required but gives you the option of not running a low engine use cycle. Resetting the oil life monitoring system suspends the low engine use mode.*

WHAT IS AUTO-START-STOP

The system helps reduce fuel consumption by stopping and restarting the engine when your vehicle has stopped. The engine restarts when you release the brake pedal.

In some situations, your vehicle could restart before you release the brake pedal, for example:

- To maintain interior comfort.
- To recharge the battery.

AUTO-START-STOP PRECAUTIONS - MANUAL TRANSMISSION

WARNING: Apply the parking brake, shift into neutral, switch the ignition off and remove the key before you leave your vehicle. Failure to follow this instruction could result in personal injury or death.

WARNING: Apply the parking brake, shift into neutral, switch the ignition off and remove the key before you open the hood or have any service or repair work completed. If you do not switch the ignition off, the engine could restart at any time. Failure to follow this instruction could result in personal injury or death.

AUTO-START-STOP PRECAUTIONS - AUTOMATIC TRANSMISSION

WARNING: Apply the parking brake, shift into park (P), switch the ignition off and remove the key before you leave your vehicle. Failure to follow this instruction could result in personal injury or death.

WARNING: Apply the parking brake, shift into park (P), switch the ignition off and remove the key before you open the hood or have any service or repair work completed. If you do not switch the ignition off, the engine could restart at any time. Failure to follow this instruction could result in personal injury or death.

SWITCHING AUTO-START-STOP ON AND OFF

The system turns on when you switch the ignition on.

Press the button to switch the system off.

Note: *Deactivating the system using the button lasts only one key cycle.*

Press the button again to switch the system back on.

STOPPING THE ENGINE - MANUAL TRANSMISSION

1. Stop your vehicle.
2. Shift into neutral.
3. Release the clutch and accelerator pedals.

Ranger (TRA, TRB) Vehicles Built From: 01-11-2024, CG4010en enGBR, Edition date: 202407, DOM

Note: *To obtain maximum benefit from the system, shift into neutral and release the clutch pedal whenever you stop your vehicle for more than three seconds.*

STOPPING THE ENGINE - AUTOMATIC TRANSMISSION

Stop your vehicle, keep your foot on the brake pedal and the transmission in drive (D).

RESTARTING THE ENGINE - MANUAL TRANSMISSION

Press the clutch pedal.

A message appears in the information display if the system requires you to take action.

RESTARTING THE ENGINE - AUTOMATIC TRANSMISSION

Release the brake pedal or press the accelerator pedal.

A message appears in the instrument cluster display if the system requires you to take action.

AUTO-START-STOP INDICATORS

WARNING: The system may require the engine to automatically restart when the auto-start-stop indicator illuminates green or flashes amber. Failure to follow this instruction could result in personal injury.

Illuminates green when the engine stops. It flashes amber and a message appears when you need to take action.

Illuminates gray with a strikethrough when the system is turned off.

Note: *See the instrument cluster display for information on why the system is unavailable.*

AUTO-START-STOP – TROUBLESHOOTING

AUTO-START-STOP – INFORMATION MESSAGES

Automatic Transmission

Message	Condition	Action
Shift to P, then restart engine	The system is not functioning.	Shift to park (P) and restart engine.
Auto StartStop Press brake to start engine	The system needs to restart the engine but requires your confirmation.	Press the brake pedal to restart the engine.
Auto StartStop Press a pedal to start engine	The system needs to restart the engine but requires your confirmation.	Press the brake pedal or the accelerator pedal to restart the engine.
Auto StartStop Manual restart required	The system is not functioning.	Restart the engine yourself.

Manual Transmission

	Condition	Action
Auto StartStop Press a pedal to start engine	The system needs to restart the engine but requires your confirmation.	Press the brake pedal or the accelerator pedal to restart the engine.
Auto StartStop Manual restart required	The system is not functioning.	Restart the engine yourself.
Auto StartStop Select neutral to start engine	The system needs to restart the engine but cannot because the transmission is in gear.	Shift into neutral to restart the engine.

A message appears in the information display if the system requires you to take action.

Ranger (TRA, TRB) Vehicles Built From: 01-11-2024, CG4010en enGBR, Edition date: 202407, DOM

AUTO-START-STOP – FREQUENTLY ASKED QUESTIONS

Why does the engine not always stop when I expect it to?

The system is designed to work in a way that complements other vehicle systems, allowing them to operate at optimum performance.

The system does not stop the engine if:

- The driver door is open.
- Your vehicle is at high altitude.
- The heated windshield is on.
- The engine is warming up.
- The outside temperature is too low or too high.
- The battery charge is low.
- The battery temperature is outside the optimal operating range.
- The engine is required to run to maintain interior climate and reduce fogging.

Why does the engine sometimes restart when I do not expect it to?

The system is designed to work in a way that complements other vehicle systems, allowing them to operate at optimum performance.

The system restarts the engine if:

- You switch the heated windshield on.
- You switch maximum defrost on.
- Your vehicle starts to roll downhill in neutral.
- The engine is required to run to maintain adequate brake system assistance.
- The engine is required to run to maintain interior climate and reduce fogging.

Can I permanently switch the system off?

No. The system plays an important role in reducing the fuel consumption and the CO_2 emissions.

Will the frequent engine starts cause parts to wear out?

Your vehicle has an enhanced battery and starter motor that are designed for the increased number of engine starts.

FUEL AND REFUELING PRECAUTIONS

WARNING: Fuels can cause serious injury or death if misused or mishandled.

WARNING: Fuel may contain benzene, which is a cancer-causing agent.

WARNING: Read and follow all the instructions on the pump island.

WARNING: When refueling always shut the engine off and never allow sparks or open flames near the fuel tank filler valve. Never smoke or use a cell phone while refueling. Fuel vapor is extremely hazardous under certain conditions. Avoid inhaling excess fumes.

Follow these guidelines when refueling:

- Extinguish all smoking materials and any open flames before refueling your vehicle.
- Switch the engine off before refueling.
- Automotive fuels can be harmful or fatal if swallowed. Fuel is highly toxic and if swallowed can cause death or permanent injury. If fuel is swallowed immediately call a physician, even if no symptoms are immediately apparent. The toxic effects of fuel may not be apparent for hours.
- Avoid inhaling fuel vapors. Inhaling fuel vapor can lead to eye and respiratory tract irritation. In severe cases, excessive or prolonged breathing of fuel vapor can cause serious illness and permanent injury.
- Avoid getting fuel in your eyes. If you splash fuel in your eyes, immediately remove contact lenses, if worn, flush with water for 15 minutes and seek medical attention. Failure to seek proper medical attention could lead to permanent injury.
- Fuels can be harmful if absorbed through the skin. If you splash fuel on your skin, clothing or both, promptly remove contaminated clothing and thoroughly wash your skin with soap and water. Repeated or prolonged skin contact causes skin irritation.
- Be particularly careful if you are taking Antabuse or other forms of Disulfiram for the treatment of alcoholism. Breathing fuel vapors could cause an adverse reaction, serious personal injury or sickness. Immediately call a physician if you experience any adverse reactions.

FUEL QUALITY

SELECTING THE CORRECT FUEL - GASOLINE

WARNING: Do not mix diesel with gasoline, gasohol or alcohol. This could cause an explosion.

WARNING: Do not use leaded gasoline or gasoline with additives containing other metallic compounds, for example manganese-based. They could damage the emission system.

Ranger (TRA, TRB) Vehicles Built From: 01-11-2024, CG4010en enGBR, Edition date: 202407, DOM

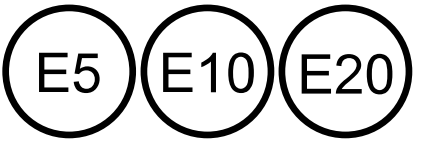

Use a minimum 95 octane unleaded gasoline that meets the specification defined by EN 228 or the equivalent national specification.

Your vehicle is suitable for use with ethanol blends up to 20% (E20).

Note: *We recommend that you only use high quality fuel. We do not recommend the use of aftermarket fuel additives or other engine treatments.*

SELECTING THE CORRECT FUEL - DIESEL

WARNING: Do not mix diesel with gasoline, gasohol or alcohol. This could cause an explosion.

WARNING: Do not use leaded gasoline or gasoline with additives containing other metallic compounds, for example manganese-based. They could damage the emission system.

Use diesel that meets the specification defined by EN 590/EN 15940 or the relevant national specification.

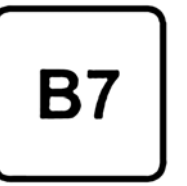

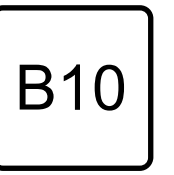

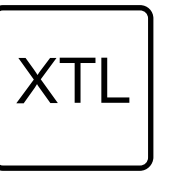

Your vehicle is suitable for use with biodiesel blends up to 10% (B10).

Note: *We recommend that you only use high quality fuel. We do not recommend the use of aftermarket fuel additives or other engine treatments.*

Note: *We do not recommend the use of additional additives to prevent fuel waxing.*

LOCATING THE FUEL FILLER FUNNEL

The fuel filler funnel is behind the right-hand side rear seat with the vehicle jack.

RUNNING OUT OF FUEL

FILLING A PORTABLE FUEL CONTAINER

WARNING: Flow of fuel through a fuel pump nozzle can produce static electricity. This can cause a fire if you are filling an ungrounded fuel container.

Use the following guidelines to avoid electrostatic charge build-up, which can produce a spark, when filling an ungrounded fuel container:

- Only use an approved fuel container to transfer fuel to your vehicle. Place the container on the ground when filling it.
- Do not fill a fuel container when it is inside your vehicle (including the cargo area).
- Keep the fuel pump nozzle in contact with the fuel container when filling it.
- Do not use a device that holds the fuel pump nozzle lever in the fill position.

ADDING FUEL FROM A PORTABLE FUEL CONTAINER

WARNING: Do not insert the nozzle of a fuel container or an aftermarket funnel into the fuel filler neck. This may damage the fuel system filler neck or its seal and cause fuel to run onto the ground.

WARNING: Do not pry open the fuel tank filler valve. This could damage the fuel system. Failure to follow this instruction could result in fire, personal injury or death.

WARNING: Do not dispose of fuel in the household refuse or the public sewage system. Use an authorized waste disposal facility.

When refueling the vehicle fuel tank from a fuel container, use the fuel filler funnel included with your vehicle. See **Locating the Fuel Filler Funnel** (page 206).

Note: *Do not use aftermarket funnels as they may not work with the capless fuel system and can damage it.*

When refueling the vehicle fuel tank from a fuel container, do the following:

1. Fully open the fuel filler door.

2. Fully insert the fuel filler funnel into the fuel filler inlet.
3. Add fuel to your vehicle from the fuel container.
4. Remove the fuel filler funnel.
5. Fully close the fuel filler door.
6. Clean the fuel filler funnel and place it back in your vehicle or correctly dispose of it.

Ranger (TRA, TRB) Vehicles Built From: 01-11-2024, CG4010en enGBR, Edition date: 202407, DOM

Note: *If your vehicle runs out of fuel add a minimum of 5 L (1.1 gal) of fuel to restart the engine.*

Note: *You may need to switch the ignition from off to on several times after refueling to allow the fuel system to pump the fuel from the tank to the engine. When restarting, cranking time takes a few seconds longer than normal.*

Note: *Extra funnels can be purchased from an authorized dealer if you choose to dispose of the funnel.*

REFUELING

REFUELING SYSTEM OVERVIEW - DIESEL

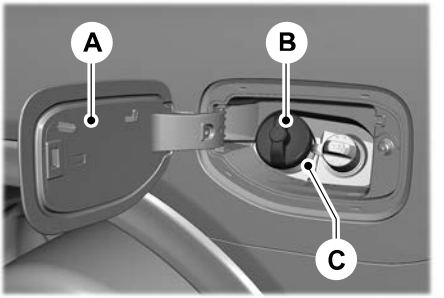

A Fuel filler door.
B Fuel cap.
C Fuel tank filler pipe.

REFUELING SYSTEM OVERVIEW - GASOLINE

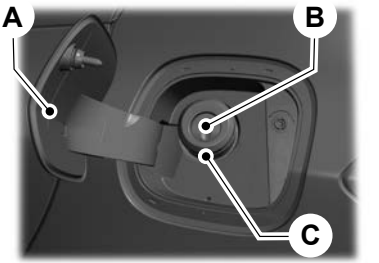

A Fuel filler door.
B Fuel filler inlet.
C Fuel tank filler pipe.

REFUELING YOUR VEHICLE - PLUG-IN HYBRID ELECTRIC VEHICLE (PHEV)

WARNING: When refueling always shut the engine off and never allow sparks or open flames near the fuel tank filler valve. Never smoke or use a cell phone while refueling. Fuel vapor is extremely hazardous under certain conditions. Avoid inhaling excess fumes.

WARNING: The fuel system may be under pressure. If you hear a hissing sound near the fuel filler inlet, do not refuel until the sound stops. Otherwise, fuel may spray out, which could cause serious personal injury.

WARNING: Fuel vapor burns violently and a fuel fire can cause severe injuries.

Ranger (TRA, TRB) Vehicles Built From: 01-11-2024, CG4010en enGBR, Edition date: 202407, DOM

WARNING: Keep children away from the fuel pump. Never let children pump fuel.

WARNING: Stay outside your vehicle and do not leave the fuel pump unattended when refueling your vehicle.

WARNING: Do not pry open the fuel tank filler valve. This could damage the fuel system. Failure to follow this instruction could result in fire, personal injury or death.

WARNING: Do not remove the fuel pump nozzle from its fully inserted position when refueling.

WARNING: Stop refueling when the fuel pump nozzle automatically shuts off for the first time. Failure to follow this will fill the expansion space in the fuel tank and could lead to fuel overflowing.

WARNING: Do not overfill the fuel tank. The pressure in an overfilled tank may cause leakage and lead to fuel spray and fire.

WARNING: Wait at least five seconds before removing the fuel pump nozzle to allow any residual fuel to drain into the fuel tank.

WARNING: Read and follow all the instructions on the pump island.

1. When you stop your vehicle, shift into park (P) and switch the ignition off.

2. Press the button on the instrument panel next to the headlamp switch to open the fuel filler door. The fuel filler door can take up to 15 seconds to open before you can insert a fuel filler nozzle.

Note: *Avoid pressing the button and blocking the fuel filler door at the same time.*

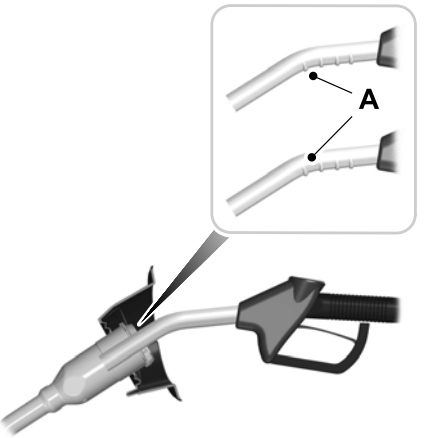

3. Insert the fuel pump nozzle up to the first notch on nozzle A. Keep it resting on the cover of the fuel tank filler pipe opening.

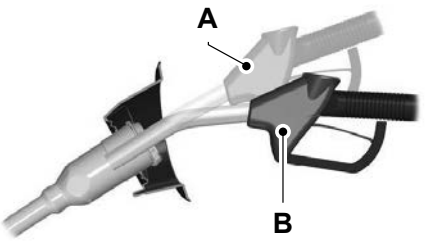

4. Hold the fuel pump nozzle in position B when refueling. Holding the fuel pump nozzle in position A can affect the flow of fuel and shut off the fuel pump nozzle before the fuel tank is full.

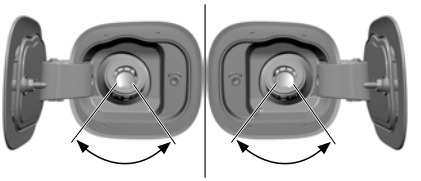

5. Operate the fuel pump nozzle within the area shown.

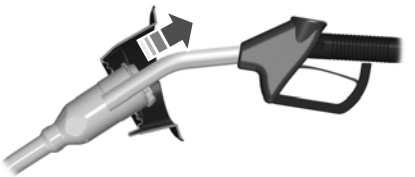

6. When the nozzle shuts off, wait at least 5 seconds, then slightly raise the fuel pump nozzle and slowly remove it.
7. Close the fuel filler door.

Note: *To close the fuel filler door, press the center rear edge of the fuel filler door and then release.*

Complete the refueling process within 20 minutes. If 20 minutes elapses, press the button on the left side of the instrument panel again. Fuel pump nozzle automatic shut off could occur if you do not press the button on the left side instrument panel.

Note: *Do not attempt to start the engine if you have filled the fuel tank with incorrect fuel. Incorrect fuel use could cause damage not covered by the vehicle warranty. Have your vehicle immediately checked.*

REFUELING YOUR VEHICLE

WARNING: When refueling always shut the engine off and never allow sparks or open flames near the fuel tank filler valve. Never smoke or use a cell phone while refueling. Fuel vapor is extremely hazardous under certain conditions. Avoid inhaling excess fumes.

WARNING: Fuel vapor burns violently and a fuel fire can cause severe injuries.

WARNING: The fuel system may be under pressure. If you hear a hissing sound near the fuel filler inlet, do not refuel until the sound stops. Otherwise, fuel may spray out, which could cause serious personal injury.

WARNING: Keep children away from the fuel pump. Never let children pump fuel.

WARNING: Do not pry open the fuel tank filler valve. This could damage the fuel system. Failure to follow this instruction could result in fire, personal injury or death.

WARNING: Stay outside your vehicle and do not leave the fuel pump unattended when refueling your vehicle.

WARNING: Do not remove the fuel pump nozzle from its fully inserted position when refueling.

WARNING: Stop refueling when the fuel pump nozzle automatically shuts off for the first time. Failure to follow this will fill the expansion space in the fuel tank and could lead to fuel overflowing.

WARNING: Do not overfill the fuel tank. The pressure in an overfilled tank may cause leakage and lead to fuel spray and fire.

WARNING: Wait at least five seconds before removing the fuel pump nozzle to allow any residual fuel to drain into the fuel tank.

1. Fully open the fuel filler door.
2. Select the correct fuel pump nozzle for your vehicle.

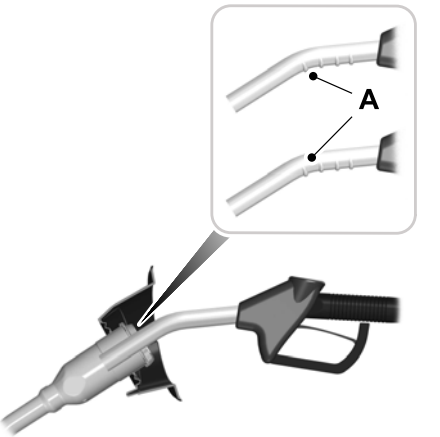

3. Insert the fuel pump nozzle up to the first notch. Keep the fuel pump nozzle resting on the fuel tank filler pipe.

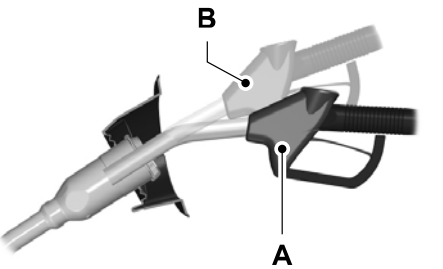

4. Hold the fuel pump nozzle in position A when refueling. Holding the fuel pump nozzle in position B can affect the flow of fuel and shut off the fuel pump nozzle before the fuel tank is full.

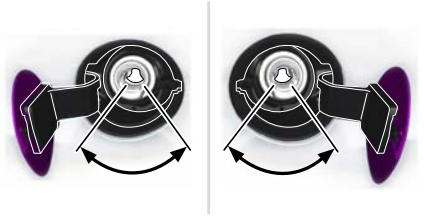

5. Operate the fuel pump nozzle within the area shown.

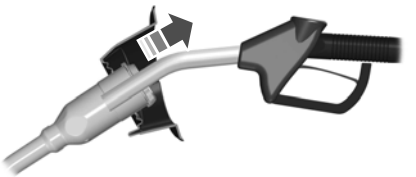

6. When the pump shuts off, wait five seconds, then raise the fuel pump nozzle and slowly remove it.
7. Fully close the fuel filler door.

Note: *Do not attempt to start the engine if you have filled the fuel tank with incorrect fuel. Incorrect fuel use could cause damage not covered by the vehicle Warranty. Have your vehicle immediately checked.*

MANUALLY OPENING THE FUEL FILLER DOOR - PLUG-IN HYBRID ELECTRIC VEHICLE (PHEV)

WARNING: The fuel system may be under pressure. If you hear a hissing sound near the fuel filler inlet, do not refuel until the sound stops. Otherwise, fuel may spray out, which could cause serious personal injury.

Note: *The transmission must be in park (P) or neutral (N).*

When using the manual override cable do the following:

1. Switch the ignition on.

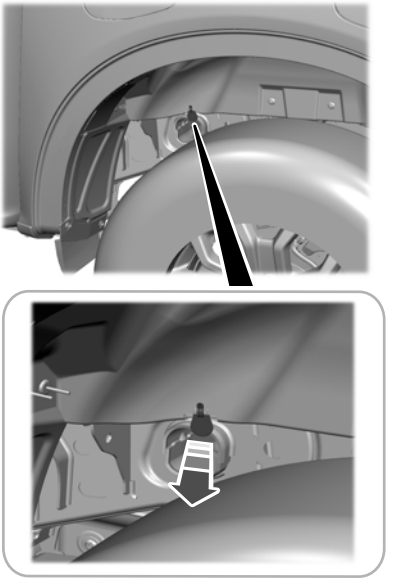

Note: *The manual override cable is in the left side rear wheel well area.*

2. Pull the manual override cable down.

Note: *Pull the manual override cable once. Repeated pulls can damage the manual override cable.*

Note: *Make sure the manual override cable moves freely without any obstructions.*

3. Switch the ignition off.
4. Complete the refueling process within 20 minutes.

Note: *Only follow this procedure if the fuel filler door fails to open. If the problem remains, have your vehicle checked as soon as possible.*

FUEL TANK CAPACITY

Advertised Capacity

The advertised capacity is the maximum amount of fuel that you can add to the fuel tank after running out of fuel. Included in the advertised capacity is an empty reserve. The empty reserve is an unspecified amount of fuel that remains in the fuel tank when the fuel gauge indicates empty.

Note: *The amount of fuel in the empty reserve varies and should not be relied upon to increase driving range.*

FUEL CONSUMPTION REGULATIONS

Energy Consumption (Off-Vehicle Charging) Fuel Economy (Internal Combustion Engine and Not Off-Vehicle Charging) and CO2 Emissions

The declared WLTP fuel/energy consumptions, CO2 emissions and electric range are determined according to the technical requirements and specifications of the European Regulations (EC) 715/2007 and (EU) 2017/1151 as last amended. The applied standard test procedures enable comparison between different vehicle types and different manufacturers.

European Directive 1999/94/EC

In addition to the fuel/energy efficiency of a car, driving behaviour as well as other non-technical factors play a role in determining a car's fuel/energy consumption, CO2 emissions and electric range. CO2 is the main greenhouse gas responsible for global warming. A guide on fuel economy and CO2 emissions which contains data for all new passenger car models is available at any point of sale free of charge.

FUEL CONSUMPTION FIGURES - 2.0L DIESEL

Low	Medium	High	Extra-High	Combined	CO_2 Emissions
L/100 km (mpg)	L/100 km (mpg)	L/100 km (mpg)	L/100 km (mpg)	L/100 km (mpg)	g/km
8.6-14.3	7.7-11.2	7.2-11.0	9.0-15.2	8.2-13.0	215-340

Ranger (TRA, TRB) Vehicles Built From: 01-11-2024, CG4010en enGBR, Edition date: 202407, DOM

FUEL CONSUMPTION FIGURES - 2.3L, PLUG-IN HYBRID ELECTRIC VEHICLE (PHEV)

WLTP

Low	Medium	High	Extra-High	Combined	CO_2 Emissions
L/100 km (mpg)	L/100 km (mpg)	L/100 km (mpg)	L/100 km (mpg)	L/100 km (mpg)	g/km
TBD	TBD	TBD	TBD	TBD	TBD

FUEL CONSUMPTION FIGURES - 3.0L ECOBOOST™

WLTP

Low	Medium	High	Extra-High	Combined	CO_2 Emissions
L/100 km (mpg)	L/100 km (mpg)	L/100 km (mpg)	L/100 km (mpg)	L/100 km (mpg)	g/km
18.8 (15)	13.3 (21)	11.8 (24)	14 (20)	13.8 (20)	315

FUEL CONSUMPTION FIGURES - 3.0L DIESEL

Low	Medium	High	Extra-High	Combined	CO_2 Emissions
L/100 km (mpg)	L/100 km (mpg)	L/100 km (mpg)	L/100 km (mpg)	L/100 km (mpg)	g/km
12.5-13.1	10.3-10.7	8.6-9.0	10.1-10.6	10.0-10.4	262-273

FUEL AND REFUELING – TROUBLESHOOTING

FUEL AND REFUELING – WARNING LAMPS

If it illuminates when you are driving, refuel as soon as possible.

FUEL AND REFUELING – INFORMATION MESSAGES

Message	Action
Fuel level low	An early reminder of a low fuel condition. Refill your vehicle.
Check fuel fill inlet	Check to make sure the fuel fill inlet is fully closed.

WHAT IS THE DIESEL PARTICULATE FILTER

The diesel particulate filter is part of your vehicle's emissions system and filters harmful diesel particulates from the exhaust gas.

HOW DOES THE DIESEL PARTICULATE FILTER WORK

The diesel particulate filter reduces emissions by trapping exhaust particles before they reach the tailpipe. The system must periodically clean the exhaust particles that gather inside the filter. This is carried out in three ways, passive regeneration, active regeneration and manual regeneration.

Passive Regeneration

In passive regeneration, the normal exhaust system temperature cleans the filter by oxidizing the soot. Cleaning occurs during normal vehicle operating conditions due to driving patterns.

Active Regeneration

Once the diesel particulate filter is full, active regeneration raises the exhaust temperature to eliminate the particles.

When the engine control module detects that the diesel particulate filter is nearly full of particulates, and you are not operating your vehicle in a manner to allow effective regeneration, messages appear in the instrument cluster display as a reminder for you to drive your vehicle in order to clean the diesel particulate filter. If you drive your vehicle in a manner to allow effective regeneration, the instrument cluster display shows a cleaning exhaust filter message.

DIESEL PARTICULATE FILTER PRECAUTIONS

WARNING: Do not park or idle your vehicle over dry leaves, dry grass or other combustible materials. The regeneration process creates very high exhaust gas temperatures and the exhaust will radiate a considerable amount of heat during and after regeneration and after you have switched the engine off. This is a potential fire hazard.

WARNING: When the ***Exhaust filter cleaning*** message appears in the information display, do not park near flammable materials, vapors or structures until filter cleaning is complete.

WARNING: The normal operating temperature of the exhaust system is very high. Never work around or attempt to repair any part of the exhaust system until it has cooled. Use special care when working around the diesel oxidation catalytic converter or the diesel particulate filter. The diesel oxidation catalytic converter and the diesel particulate filter heat up to very high temperatures after only a short period of engine operation and remain hot after you switch the engine off.

Note: *Avoid running out of fuel.*

Note: *During regeneration at low speed or engine idle, you may smell a hot metallic odor and could notice a clicking metallic sound. This is due to high temperatures reached during regeneration and is normal.*

Note: *Changes in the engine or exhaust sound may be heard during the regeneration process.*

Failure to perform active or manual regeneration when instructed could result in a clogged diesel particulate filter. If the diesel particulate filter fills beyond the regeneration threshold, your vehicle disables the ability for active and manual regeneration. This could result in irreversible damage your vehicle Warranty may not cover.

DIESEL PARTICULATE FILTER REQUIREMENTS

The diesel particulate filter on your vehicle requires periodic regeneration to maintain its correct function.

If your journeys meet one of the following conditions:

- You drive only short distances.
- You frequently switch the ignition on and off.
- Your journeys contain a high level of acceleration and deceleration.

You must carry out occasional trips with the following conditions to assist the regeneration process:

- Drive your vehicle in more favorable conditions, which you will find at higher vehicle speeds in normal driving, on a main road or freeway for a minimum of 20 minutes. This drive may include short stops that will not affect the regeneration process.
- Avoid prolonged idling and observe speed limits and road conditions.
- Do not switch the ignition off.
- Select a suitable gear to ideally maintain engine speed between 1500 and 3000 RPM.

DIESEL PARTICULATE FILTER MANUAL REGENERATION

WHAT IS DIESEL PARTICULATE FILTER MANUAL REGENERATION

Diesel particulate filter manual regeneration allows you to manually start regeneration of the diesel particulate filter at idle to clean the filter.

Note: *If you are not sure whether your vehicle has this feature, contact your authorized dealer.*

DIESEL PARTICULATE FILTER MANUAL REGENERATION PRECAUTIONS

WARNING: Stay clear of the exhaust tailpipe during regeneration. Hot exhaust gases can burn you badly.

You may not be able to use manual regeneration if the service engine soon warning lamp appears in the instrument cluster display.

Note: *During the use of manual regeneration, you may observe a light amount of white smoke. This is normal.*

DIESEL PARTICULATE FILTER MANUAL REGENERATION REQUIREMENTS

You can use the manual regeneration feature when a message appears in the information display and you are not able to drive in a manner that allows effective automatic active regeneration or if you choose to manually start the regeneration of the diesel particulate filter while the vehicle is idle.

Before you start manual regeneration, do the following:

- Make sure the parking brake is on.
- Shift into park (P) or neutral (N), on stable, level ground.
- Park your vehicle outside of any structure.
- Park your vehicle 3–5 m (10–15 ft) away from any obstructions and away from materials that can easily combust or melt, for example paper, leaves, petroleum products, fuels, plastics and other dry organic material.
- Make sure there is a minimum of 1/8 tank of fuel.
- Make sure all fluids are at proper levels.

DIESEL PARTICULATE FILTER MANUAL REGENERATION LIMITATIONS

You cannot use manual regeneration until the diesel particulate filter load percentage has reached 100%. The diesel particulate filter load percentage fluctuates up and down when driving your vehicle due to active and passive regenerations.

If your vehicle is operated with significant stationary operation, low speed drive cycles less than 40 km/h (25 mph), short drive cycles, drive time less than 15 minutes or the vehicle does not fully warm up, passive and active regeneration may not sufficiently clean the diesel particulate filter system.

Aftermarket devices or modifications to the exhaust system may reduce the effectiveness of the exhaust system as well as cause damage to the exhaust system or engine. This may also degrade vehicle performance and could lead to engine damage that may not be covered by the vehicle Warranty.

STARTING DIESEL PARTICULATE FILTER MANUAL REGENERATION

Start your vehicle and when it has reached the normal operating temperature, press the instrument cluster display control button on the steering wheel. See **Instrument Cluster Display** (page 125).

If the diesel particulate filter is near or at saturation, a message requesting permission to initiate filter cleaning appears in the instrument cluster display. See **Diesel Particulate Filter – Information Messages** (page 220). Answer yes to this prompt and then follow the next prompts regarding exhaust position required to initiate manual regeneration. Be sure to understand each prompt. If you are not sure what is being asked by each prompt, contact an authorized dealer. The display shows when the operation has started and finished. You can also drive to clean the filter.

When the system is at the point of oversaturation, the malfunction indicator lamp illuminates and a message appears in the instrument cluster display. You cannot initiate filter cleaning. Have your vehicle checked as soon as possible.

Once manual regeneration starts, engine speed increases and the cooling fan speed increases. The engine sound changes when the engine and cooling fan speeds increase.

It is not necessary to open the hood on the engine compartment. Once manual regeneration completes, the engine speed returns to normal idling. The exhaust system remains very hot for several minutes even after regeneration is complete. Do not park the vehicle over materials that could burn until the exhaust

Ranger (TRA, TRB) Vehicles Built From: 01-11-2024, CG4010en enGBR, Edition date: 202407, DOM

system has had sufficient time to cool. Depending on the amount of soot collected by the diesel particulate filter, ambient temperature and altitude, manual regeneration lasts approximately 30 minutes.

DIESEL PARTICULATE FILTER – TROUBLESHOOTING

DIESEL PARTICULATE FILTER – WARNING LAMPS

If there are any issues with the diesel particulate filter system, or when the system is at the point of oversaturation, the powertrain warning lamp and the malfunction indicator lamp illuminate to inform you that your vehicle requires service. You may not be able to initiate filter cleaning. Have your vehicle checked as soon as possible.

The diesel exhaust filter regeneration disabled warning lamp will illuminate to inform you that the automatic cleaning function is disabled.

DIESEL PARTICULATE FILTER – INFORMATION MESSAGES

Message	Action
Exhaust filter cleaning	Your vehicle has entered the cleaning mode. Various engine actions will raise the exhaust temperature in the Diesel Particulate Filter system to burn off the particles (exhaust soot). After the vehicle burns the particles off, the exhaust temperature will return to normal levels. This message is NORMAL.
Exhaust filter overloaded Drive to clean	The diesel particulate filter is full of particles (exhaust soot) and you are not operating the vehicle in a manner that allows normal cleaning. Drive the vehicle above 50 km/h (30 mph) when it is safe to do so, until the message turns off.
Exhaust filter overloaded Clean now	
Exhaust filter at limit Clean now	The diesel particulate filter is full of particles (exhaust soot) and you are not operating the vehicle in a manner that allows normal cleaning. Drive the vehicle above 50 km/h (30 mph) when it is safe to do so, until the message turns off.
Exhaust filter at limit Drive to clean now	
Exhaust filter drive completed	Your diesel particulate filter is clean.

Message	Action
Exhaust filter cleaned	Your diesel particulate filter is clean (OCR Only).
Exhaust filter cleaning stopped	The manual regeneration process has stopped (OCR Only).
Exhaust filter over limit Service now	You must have your vehicle serviced by an authorized dealer. Ignoring this warning message could lead to reduced drivability and customer expense, including damage to the diesel particulate filter. Your new vehicle warranty may not cover this damage.

WHAT IS THE SELECTIVE CATALYTIC REDUCTION SYSTEM

The selective catalytic reduction system helps reduce emission levels of oxides of nitrogen from the exhaust system.

HOW DOES THE SELECTIVE CATALYTIC REDUCTION SYSTEM WORK

The selective catalytic reduction system injects diesel exhaust fluid into the exhaust system to enable correct selective catalytic reduction system function.

SELECTIVE CATALYTIC REDUCTION SYSTEM PRECAUTIONS

WARNING: Keep AdBlue® out of reach of children. Avoid contact with skin, eyes or clothing. In case of contact with your eyes, immediately flush with water and get prompt medical attention. In case of contact with your skin, immediately clean with soap and water. If you swallow any AdBlue®, drink plenty of water and immediately seek medical attention.

WARNING: Only refill the AdBlue® tank in a well-ventilated area. When you remove the AdBlue® tank filler cap or an AdBlue® container cap, ammonia vapors may escape. Ammonia vapors can be irritating to skin, eyes and mucous membranes. Inhaling ammonia vapors can cause burning to the eyes, throat and nose and cause coughing and watery eyes.

WARNING: Immediately refill the AdBlue® fluid when low and replace when contaminated. Drive with caution and be careful where you stop because you cannot restart your vehicle until you refill or replace the fluid.

WARNING: Tampering with or disabling the selective catalytic reduction system results in severe vehicle performance limitation, eventually your vehicle not starting.

Do not dilute the AdBlue® with water or any other liquid.

Do not put AdBlue® in the vehicle fuel tank. This can cause engine damage not covered by the vehicle warranty.

Do not put fuel or any additives in the AdBlue® tank. This can cause damage not covered by the vehicle warranty.

Do not overfill the AdBlue® tank.

Make sure you immediately rinse any spills of AdBlue® on painted surfaces. Damage to the painted surface could occur.

SELECTIVE CATALYTIC REDUCTION SYSTEM REQUIREMENTS

Only use AdBlue® certified to ISO-22241.

SELECTIVE CATALYTIC REDUCTION SYSTEM GUIDELINES

Note: *The use and refilling of Diesel Exhaust Fluid (AdBlue ®) is mandatory for your vehicle to comply with the legal emission requirements.*

- Only use AdBlue® certified to ISO-22241.
- Do not add fuel or any additives to the Adblue tank. This will cause damage not covered by vehicle warranty.
- Do not overfill the AdBlue® tank.
- Do not dilute with water or any other liquid.
- Do not reuse an empty fluid container.
- Do not store in direct sunlight.
- Store the AdBlue® at temperatures between -5ºC (23ºF) and 20ºC (68ºF).
- Do not store fluid containers in your vehicle.
- The fluid is non-flammable, non-toxic, colorless and water-soluble.
- Make sure you immediately rinse any spills of AdBlue® on painted surfaces. Damage to the painted surface could occur.

The AdBlue® tank filler pipe is next to the fuel tank filler pipe and has a blue cap. Fill the tank using a fluid pump at an AdBlue® filling station or an AdBlue® container.

FILLING THE SELECTIVE CATALYTIC REDUCTION SYSTEM TANK

FILLING THE SELECTIVE CATALYTIC REDUCTION SYSTEM TANK IN COLD WEATHER

AdBlue® may freeze when the temperature is below -11ºC (12ºF). Your vehicle has a preheating system which allows the fluid to operate below -11ºC (12ºF). If you overfill the AdBlue® tank and the fluid freezes, it may cause damage not covered by the vehicle warranty.

Note: *It may not be possible to fully fill the AdBlue® tank when the temperature is below -11ºC (12ºF).*

Note: *If the AdBlue® tank is frozen, it could not correctly display the fluid level or recognize when you fill the tank. The AdBlue® level updates when the tank completely thaws out.*

FILLING THE SELECTIVE CATALYTIC REDUCTION SYSTEM TANK USING A FUEL STATION PUMP

WARNING: Do not allow diesel exhaust fluid (AdBlue) to come into contact with eyes, skin or clothing. Should the fluid come into contact with eyes, flush them with plenty of water and seek medical attention. Clean affected skin with soap and water. If swallowed, drink plenty of water and seek medical attention immediately.

WARNING: Refill the diesel exhaust fluid (AdBlue) tank in a well-ventilated area. When removing the tank cap or a container cap, ammonia vapor may escape. Ammonia vapor is an irritant to the eyes, skin and mucous membranes. Inhaling ammonia vapor can cause burning to the eyes, throat and nose resulting in watering eyes or severe coughing.

Filling the AdBlue® tank using a fuel station pump is similar to refueling your vehicle.

1. Open the fuel filler door.

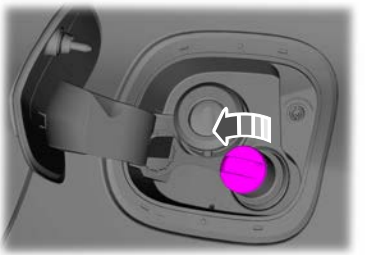

2. Remove the AdBlue® tank filler cap.

Note: *The AdBlue® tank has a blue filler cap.*

3. Insert the AdBlue® pump nozzle.

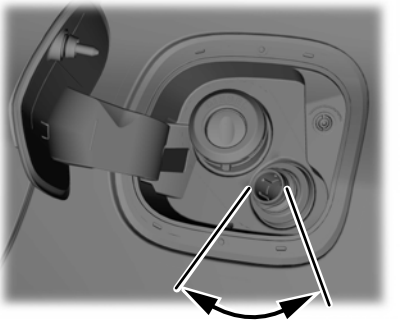

4. Operate the AdBlue® pump nozzle within the area shown.

Note: *The pump nozzle shuts off when the tank is full.*

5. Slightly raise the AdBlue® pump nozzle and then slowly remove it.
6. Replace the AdBlue® tank filler cap. Turn it clockwise until you feel a strong resistance and it clicks.

Do not attempt to start the engine if you have filled the AdBlue® tank with incorrect fluid. Using incorrect fluid could cause damage not covered by the vehicle warranty. Have your vehicle checked as soon as possible.

FILLING THE SELECTIVE CATALYTIC REDUCTION SYSTEM TANK USING A PORTABLE CONTAINER

WARNING: Do not allow diesel exhaust fluid (AdBlue) to come into contact with eyes, skin or clothing. Should the fluid come into contact with eyes, flush them with plenty of water and seek medical attention. Clean affected skin with soap and water. If swallowed, drink plenty of water and seek medical attention immediately.

WARNING: Refill the diesel exhaust fluid (AdBlue) tank in a well-ventilated area. When removing the tank cap or a container cap, ammonia vapor may escape. Ammonia vapor is an irritant to the eyes, skin and mucous membranes. Inhaling ammonia vapor can cause burning to the eyes, throat and nose resulting in watering eyes or severe coughing.

Use containers that have a seal on the spout.

Always follow the manufacturer's instructions.

1. Remove the fluid container cap.
2. Place the spout onto the container and tighten it until you feel a strong resistance.

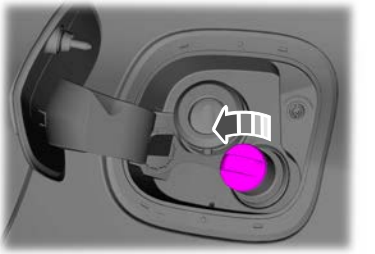

3. Remove the AdBlue® tank filler cap.
4. Insert the spout into the AdBlue® tank filler pipe until the seal on the spout fully seats.
5. Pour the fluid into the tank.

Note: *The fluid stops flowing when the tank is full.*

6. Return the container to the vertical position slightly below the AdBlue® tank filler pipe.
7. Allow any fluid remaining in the spout to drain back into the container.
8. Remove the spout from the AdBlue® tank filler pipe.
9. Remove the spout from the AdBlue® container and replace the cap.
10. Replace the AdBlue® tank filler cap. Turn it clockwise until you feel a strong resistance and it clicks.

Do not attempt to start the engine if you have filled the AdBlue® tank with incorrect fluid. Using incorrect fluid could cause damage not covered by the vehicle warranty. Have your vehicle checked as soon as possible.

Ranger (TRA, TRB) Vehicles Built From: 01-11-2024, CG4010en enGBR, Edition date: 202407, DOM

CHECKING THE SELECTIVE CATALYTIC REDUCTION SYSTEM STATUS

The information display shows a series of messages about the amount of AdBlue® available.

A systems check displays messages indicating the amount of AdBlue® available or displays a warning message indicating the approximate distance remaining as the fluid in the AdBlue® tank nears empty. See **Selective Catalytic Reduction System – Information Messages** (page 227).

SELECTIVE CATALYTIC REDUCTION FLUID CONSUMPTION

AdBlue® consumption is directly related to fuel consumption and is governed by many factors, for example driving style, high speed driving, stop-start driving, air conditioning usage, add-on accessories, payload and towing. The AdBlue® consumption may vary between 1% and 6% of the fuel consumption but could be more under extreme conditions such as heavy towing.

AdBlue® consumption is specified for a vehicle variant and not for a single car.

ADBLUE® CAPACITY AND SPECIFICATION

SELECTIVE CATALYTIC REDUCTION SYSTEM – TROUBLESHOOTING

SELECTIVE CATALYTIC REDUCTION SYSTEM – WARNING LAMPS

The cold emission system temperature indicator light will illuminate to inform you of periods of engine power reduction during cold exhaust system treatment.

The warning lamp illuminates if the system detects the fluid is low or a system malfunction.

If the warning lamp illuminates, the information display messages give you an indication whether the concern is fluid related or if there is a selective catalytic reduction system malfunction. If the warning lamp illuminates when your vehicle is moving, and the fluid is at a sufficient level, this indicates a system malfunction. Have your vehicle checked as soon as possible.

Ranger (TRA, TRB) Vehicles Built From: 01-11-2024, CG4010en enGBR, Edition date: 202407, DOM

SELECTIVE CATALYTIC REDUCTION SYSTEM – INFORMATION MESSAGES

AdBlue® Level

Message	Action
AdBlue® low Range : XXXX km Refill soon AdBlue® low Range : XXXX mls Refill soon	Indicates the approximate distance remaining before the AdBlue® tank becomes empty. Refill the AdBlue® tank as soon as possible.
AdBlue® low No engine start in XXXX km AdBlue® low No engine start in XXXX mls	Indicates the approximate distance remaining before the AdBlue® tank becomes empty. The engine would not restart if you switch the ignition off. Refill the AdBlue® tank as soon as possible.
AdBlue® level empty. Refill to start engine	The AdBlue® tank is empty. The engine would not restart if you switch the ignition off. Refill the AdBlue® tank. The minimum AdBlue® refill quantity required to restart the engine is available in the information display.

Note: *When filling the AdBlue® tank from empty, allow a short period of time for the increased AdBlue® level to register.*

Note: *If the AdBlue® tank freezes at low level, the remaining distance shown in the information display could be reduced.*

AdBlue® Malfunction

Message	Action
AdBlue® system malfunction Service required	The system has malfunctioned. Have your vehicle checked as soon as possible.
AdBlue® system No engine start in XXXX km AdBlue® system No engine start in XXXX mls	Indicates the approximate distance before a detected system fault would restrict the engine from starting. The engine would not restart if you switch the ignition off. Have your vehicle checked as soon as possible.
AdBlue® system Service required to start engine	The system has malfunctioned. Have your vehicle checked as soon as possible.

WHAT IS THE CATALYTIC CONVERTER

The catalytic converter is part of your vehicle's emissions system and filters harmful pollutants from the exhaust gas.

CATALYTIC CONVERTER PRECAUTIONS

WARNING: Do not park, idle or drive your vehicle on dry grass or other dry ground cover. The emission system heats up the engine compartment and exhaust system, creating the risk of fire.

WARNING: The normal operating temperature of the exhaust system is very high. Never work around or attempt to repair any part of the exhaust system until it has cooled. Use special care when working around the catalytic converter. The catalytic converter heats up to a very high temperature after only a short period of engine operation and stays hot after the engine is switched off.

WARNING: Exhaust leaks may result in entry of harmful and potentially lethal fumes into the passenger compartment. If you smell exhaust fumes inside your vehicle, have your vehicle inspected immediately. Do not drive if you smell exhaust fumes.

To avoid damaging the catalytic converter:

- Do not crank the engine for more than 10 seconds at a time.
- Do not run the engine with a spark plug lead disconnected.
- Do not push-start or tow-start your vehicle. Use booster cables. See **Jump Starting the Vehicle** (page 452).
- Use the correct fuel. See **Fuel and Refueling** (page 205).
- Do not switch the ignition off when your vehicle is moving.
- Avoid running out of fuel.
- Have the items listed in scheduled maintenance information performed according to the specified schedule.

Note: *Do not make any unauthorized changes to your vehicle or engine. By law, vehicle owners and anyone who manufactures, repairs, or services a fleet of vehicles are not permitted to intentionally remove an emission control device or prevent it from working.*

CATALYTIC CONVERTER – TROUBLESHOOTING

CATALYTIC CONVERTER – WARNING LAMPS

Your vehicle has an on-board diagnostics system that monitors the emission control system. If any of the following warning lamps illuminate, this may indicate that the on-board diagnostics system has detected an emission control system malfunction.

Continuing to drive your vehicle may cause reduced power or the engine to stop. Failure to respond to a warning lamp may cause damage that your vehicle Warranty may not cover. Have your vehicle checked as soon as possible.

WHAT IS THE GASOLINE PARTICULATE FILTER

The gasoline particulate filter is part of your vehicle's emissions system and filters particulates from the exhaust emissions.

HOW DOES THE GASOLINE PARTICULATE FILTER WORK

Particles in the exhaust emissions collect in the gasoline particulate filter causing a gradual restriction over time. This restriction is removed through a regeneration process controlled by the engine control system. The regeneration process converts the particles captured by the filter into harmless gases.

GASOLINE PARTICULATE FILTER PRECAUTIONS

WARNING: Do not park or idle your vehicle over dry leaves, dry grass or other combustible materials. The regeneration process creates very high exhaust gas temperatures and the exhaust will radiate a considerable amount of heat during and after regeneration and after you have switched the engine off. This is a potential fire hazard.

- Do not crank the engine for more than 10 seconds at a time.
- Do not push-start or tow-start your vehicle. Use booster cables.
- Do not switch the ignition off when your vehicle is moving.
- Do not ignore warning lamps, indicators or information messages.

If the filter is saturated or approaching saturation, a warning lamp could illuminate and a message could appear in the instrument cluster display.

If you do not take action when a warning lamp illuminates and a message appears in the instrument cluster display, you could cause damage not covered by the vehicle warranty.

GASOLINE PARTICULATE FILTER REQUIREMENTS

Regeneration occurs when you drive at moderate to high speed. However if you generally drive short distances at low speed, the engine control system could actively raise the exhaust emissions temperature to remove the particulates that have collected in the filter to make sure that it continues to correctly operate.

To assist in regeneration, we recommend that you make occasional trips that allow you to:

- Drive at a varied range of conditions, including highway conditions for a minimum of 20 minutes.
- Avoid prolonged engine idling.
- Select a suitable gear to maintain engine speed between 1500 and 4000 RPM.

Note: *The best gasoline particulate filter regeneration occurs following moderate acceleration or extended cruise, such as exiting the highway, with your foot off the accelerator and decelerating while in gear.*

Ranger (TRA, TRB) Vehicles Built From: 01-11-2024, CG4010en enGBR, Edition date: 202407, DOM

GASOLINE PARTICULATE FILTER – TROUBLESHOOTING

GASOLINE PARTICULATE FILTER – WARNING LAMPS

Malfunction indicator lamp.

GASOLINE PARTICULATE FILTER – INFORMATION MESSAGES

Message	Details
Exhaust filter at limit Drive to clean now	• Drive at a varied range of conditions, including highway conditions for 20 minutes or until the message disappears. • Avoid prolonged engine idling. • Select a suitable gear to maintain engine speed between 1500 and 4000 RPM.
Exhaust filter over limit Service now	• Drive at a moderate speed. • Avoid heavy acceleration and deceleration. • Have your vehicle checked as soon as possible.

WHAT IS THE HIGH VOLTAGE BATTERY

The high voltage battery is a highly sophisticated lithium ion battery system, used to store electrified energy to power your vehicle.

HIGH VOLTAGE BATTERY PRECAUTIONS

WARNING: This battery pack should only be serviced by an authorized electric vehicle technician. Improper handling can result in personal injury or death.

WARNING: Keep your hands and clothing clear of the cooling fan.

WARNING: Apply the parking brake, shift into park (P), switch the ignition off and remove the key before you open the hood or have any service or repair work completed. If you do not switch the ignition off, the engine could restart at any time. Failure to follow this instruction could result in personal injury or death.

WARNING: Do not touch the electronic ignition system parts after you have switched the ignition on or when the engine is running. The system operates at high voltage. Failure to adhere to this warning could result in serious personal injury or death.

Your vehicle consists of various high-voltage components and wiring. All of the high-voltage power flows through specific wiring assemblies labeled as such or covered with a solid orange convolute, or orange striped tape, or both. Do not come in contact with these components.

RECYCLING AND DISPOSING OF THE HIGH VOLTAGE BATTERY

Please recycle in accordance with local regulations.

HIGH VOLTAGE BATTERY – TROUBLESHOOTING

HIGH VOLTAGE BATTERY – WARNING LAMPS

Battery Shutoff

Illuminates when the high voltage battery is shut off.

Battery Temperature

Illuminates when the high voltage battery is above or below normal operating conditions.

Limited Performance

Illuminates if your vehicle has limited performance due to a cold or hot battery. Drive with caution. Keep your vehicle connected to a charging system when not in use to maintain battery temperature.

High Voltage Hazard

Illuminates if there is a presence of a high voltage hazard.

Ranger (TRA, TRB) Vehicles Built From: 01-11-2024, CG4010en enGBR, Edition date: 202407, DOM

CHARGING EQUIPMENT PRECAUTIONS

WARNING: Read all instructions and warnings in this publication before using the charging equipment.

WARNING: Do not use an electrical outlet that is immersed or submerged in water, snow, or in an electrical storm. When using the charging equipment, avoid moisture, water and snow at all times. Failure to follow these instructions could result in fire, electric shock, personal injury or death.

WARNING: The wall outlet and charging equipment must be in good condition and installed to comply with provisions of up-to-date local codes and regulations. Do not use an ungrounded wall outlet. Have a qualified, licensed electrician install and check the wall outlet, if you suspect that it is not properly grounded, the connection feels loose, or the outlet is damaged. The wall plug must fit firmly and fully into the outlet. Do not use extension cords, surge protectors, timers or other adapters. Failure to follow these instructions could result in electric shock, property damage, personal injury, or death.

WARNING: Do not drop the control box or coupler. Failure to follow this instruction could result in personal injury, fire, electric shock, death or property damage.

WARNING: Visually inspect the charging equipment before each use. Do not use the charging equipment if it is damaged. Do not attempt to open or repair any part of the charging equipment components as it will not operate. Charging equipment components contain critical safety devices in the wall outlet plug and connector that cannot be serviced. Contact your local dealer for assistance. Failure to follow these instructions could result in fire, electric shock, or personal injury or death.

WARNING: Do not use the charging equipment in temperatures outside of the operation range of -30ºC (-22ºF) to 50ºC (122ºF). Store the charging equipment in a clean dry place between the temperatures of -30ºC (-22ºF) to 85ºC (185ºF). Stow the control box indoors on the hanger or all the charging equipment in the bag after use to prevent damage to the charging equipment and personal injury.

WARNING: Do not connect or disconnect any pluggable components of the charging equipment when in use or charging. Do not put fingers or any object into the electric charge coupler. Supervise any children in the vicinity of the charging equipment when plugged into the wall outlet. Failure to follow these instructions could result in damage to the charging equipment, fire, electric shock, personal injury or death.

WARNING: This equipment has arcing or sparking parts. Do not expose to flammable vapors. Position this equipment at least 450 mm (18 in) above the floor.

WARNING: To reduce the risk of fire, connect only to a circuit provided with 40 amps maximum branch circuit overcurrent protection installed in accordance with NEC and local electrical code.

WARNING: High voltage is present in your electric meter housing and power distribution panel. Contact with high voltage can result in fire, electric shock, personal injury or death.

WARNING: You risk death, fire, or serious injury to yourself and others if you do not follow the instruction highlighted by the warning symbol.

CHARGING EQUIPMENT OVERVIEW

Your vehicle has a charge cord located inside the vehicle under the left rear seat inside the storage compartment.

- Do not use this product if the flexible power cord or electric vehicle cable has broken insulation, or any other signs of damage.
- Do not use this product if the enclosure or the electric vehicle connector is broken, cracked, open, or shows any other indication of damage.

Note: *You need to plug the charge cord into a dedicated outlet.*

CAUTION: TO REDUCE THE RISK OF FIRE - Use a three-prong AC outlet that is properly grounded, 15-20 amps or greater, and in good condition. Use a dedicated circuit. You cannot have other appliances connected to the same circuit. If you do not use a dedicated circuit, the circuit breaker could trip or open. If you do not have a dedicated circuit, contact a licensed professional electrician for proper installation.

Note: *Make sure the electrical source meets the requirements for the high-voltage batteries to charge.*

Make sure that the charge cord is completely unwrapped before charging. Always plug the cord into the AC outlet before connecting the charged coupler into the charge port on your vehicle.

Note: *When you plug the charge cord into an outlet, use the following table to determine your vehicle charge status. If the power indicator light is off after plugging in the charge cord, use a different outlet.*

MOVING AND STORAGE INSTRUCTIONS

Note: *Do not hold the charge cord by the flexible power cable.*

Make sure that you completely wrap the charge cord after charging.

When charging is complete, place the charge cord into the storage bin under the left rear seat.

Note: *Do not trap the cable on the charge cord within the rear seat latch when stowing, as this could cause damage to the cable.*

Note: *Store the charge cord in a clean, dry place between the temperature of -40–90°C (-39.9–193.9°F).*

CHARGING EQUIPMENT INDICATORS

Charge Cord

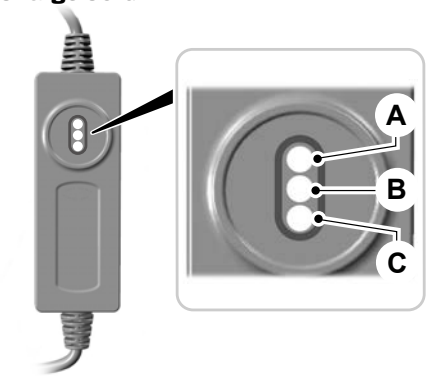

A. Power.
B. Fault.
C. Check Outlet.

Charge Cord Indicator Lights

Charge Cord LED Indicators			What it Means	What to Do
Power (Green)	Fault (Red)	Check Outlet (Amber)		
Off	Off	Off	If the LED indicators are off after plugging in the charge cord and the plug is experiencing a no power condition from the wall outlet, use a different outlet.	Use a different wall outlet.
On	Off	Off	The charge cord is plugged into the wall outlet and ready to charge your vehicle. Reference the charge port section below for information on vehicle charging.	No action required.
On	Flashing	On	The charge cord AC plug is experiencing an overheating condition. The charge cord is in retry mode to return to normal condition. If the fault persists, you have a bad wall outlet.	Check the outlet. If the problem persists, use a different outlet.

Charge Cord LED Indicators			What it Means	What to Do
Power (Green)	Fault (Red)	Check Outlet (Amber)		
On	Off	Flashing	The charge cord is charging at a reduced current rate due to a wall outlet over temperature condition.	Check the outlet. If the problem persists, use a different outlet.
On	On	Flashing	The charge cord AC plug has overheated. The cordset retry mode has been exhausted. Your vehicle is not charging. You have a bad wall outlet.	Check the outlet. If the problem persists, use a different outlet.
On	Flashing	Off	The charge cord is experiencing a ground fault at the charge port. The charge cord is in retry mode to return to normal condition. Your vehicle is not charging.	Unplug and re-plug to vehicle charge port.
On	On	Off	The charge cord is experiencing a ground fault at the charge port. The cordset retry mode has been exhausted. Your vehicle is not charging. Call for service.	Request vehicle service.
On	On/Two flash interval	Two flash interval	Missing ground at AC outlet. Your vehicle is not charging. The charge cord is in retry mode.	Connect to a properly grounded AC outlet. If fault still exists for more than two minutes, return cordset for service.
On	On/ Flashing	Off	The charge cord is experiencing an internal fault. Call for service.	Wait two minutes. If fault is still present, request cordset service. Replace the cordset.

Note: *If charging for your plug-in vehicle fails, please call the Customer Relationship Center, or click on Call for support or Live chat at our website.*

Ranger (TRA, TRB) Vehicles Built From: 01-11-2024, CG4010en enGBR, Edition date: 202407, DOM

LOCATING THE CHARGE PORT

The charge port is between the front left-hand side door and the front left-hand wheel well. To open, press the center right edge of the charge port door, and then release.

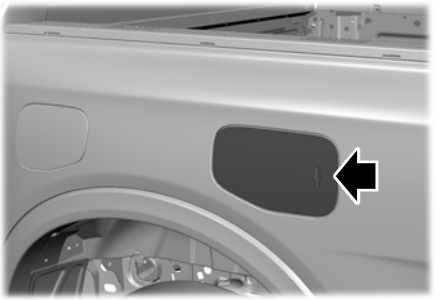

Note: *Do not force the charge port door open or closed. Forcing the door open or closed damages the charge port.*

CHARGE PORT INDICATORS

The charge status indicator is next to the charging port behind the charge port door. It indicates the charge status of the high voltage battery in your vehicle.

We use the color white as a courtesy light to help with plugging in and to acknowledge actions such as plugging in, unplugging or pressing the charge cord unlock button.

We use the color blue when you plug the vehicle in and are either charging or waiting to charge.

We use the color amber to indicate charge faults.

The charge status indicator displays how far along the state of charge is:

- When the charge status indicator is pulsing in blue, the vehicle is actively charging.
- When the indicator illuminates constantly in blue, the state of charge is 100 percent, or the charge target is reached.

Note: *When charging stops, the charge status indicator illuminates solidly in a blue color for 30 seconds before turning off. Charging stops when complete or when paused due to charge settings or charge station actions.*

Note: *Charging faults are identified by the color amber on the charge status indicator. Faults can occur within the vehicle charging system or outside the vehicle, such as with the charge station or electrical supply.*

Note: *If the system detects a fault in the vehicle charging system at any point in a charge cycle, the charge status indicator illuminates solidly in an amber color for 30 seconds and then turns off. If this happens, unplug the charge coupler and then plug it back into the charge port receptacle. If the problem persist please have your vehicle serviced as soon as possible.*

Ranger (TRA, TRB) Vehicles Built From: 01-11-2024, CG4010en enGBR, Edition date: 202407, DOM

Note: *If the system detects a fault outside the vehicle, such as with the charge station the charge status indicator flashes amber continuously for 30 seconds and then turns off. If this happens check the charge station or electrical supply.*

AC CHARGING

CHARGING AT HOME

AC charging preserves the health of the high voltage battery for longer high voltage battery life.

When AC charging, keep your vehicle plugged in when outside temperatures are very high or low. This enables the system to maintain the high voltage battery for best performance.

CAUTION: TO REDUCE THE RISK OF FIRE - The plug must be properly grounded. Use a dedicated circuit. If you do not use a dedicated circuit, the circuit breaker could trip or open. If you do not have a dedicated circuit, contact a licensed professional electrician for proper installation.

You must unwrap the charge cord completely before charging.

When using the charge cord, plug the charge coupler into the vehicle charge port where the same identifier symbol can be seen.

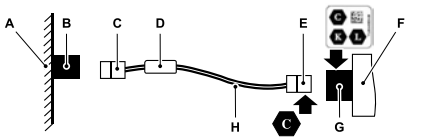

A Mains.
B Socket Outlet (Household).
C Plug.
D Control box.
E Charge coupler.
F Vehicle.
G Charge port receptacle.
H Charge cord.

1. Put your vehicle in park (P).

Note: *Your vehicle must be in park (P) to charge and for the charge status indicator to illuminate.*

2. Press the center right edge of the charge port door and then release to open the door.
3. Select the appropriate connector for the wall outlet you will use and plug the connector into the charge cord control box.

Note: *To insert the connector, firmly grasp the connector by the cable or plug and push into the control box until it clicks. Make sure the connector is fully inserted and flush with the control box before inserting it into the outlet. Improper insertion will cause a longer charge session or faults.*

4. Plug the connector into the wall outlet.
5. Confirm that the charge cord's LEDs illuminate.
6. Plug the charge coupler into the charge port receptacle on your vehicle.

Note: *Your vehicle will lock to the charge coupler.*

Note: *When you plug in your vehicle, it will start charging to 100% by default unless scheduled charging has been set up for this location.*

Note: *Plug the connector into the wall outlet before connecting the charge coupler to your vehicle's charge port.*

Note: *When the handle is properly engaged the light ring will illuminate. This indicates the beginning of a normal charge cycle.*

Note: *There could be a delay in light ring illumination due to vehicle internal communications.*

Note: *If charging for your vehicle fails, please contact the Customer Relationship Center. To ensure superior service, please take note of the serial number when contacting customer support.*

For more information, visit www.owner.ford.com.

Stopping Charging

1. Push the coupler unlock button on the light ring and remove the charge coupler handle from the vehicle.

Note: *Do not attempt to remove the charge coupler before you unlock it. Do not use any kind of tool to try and remove a locked charge coupler. Doing so could damage your vehicle and the charge coupler.*

Note: *You cannot unlock the charge coupler handle unless the vehicle remote is near the vehicle.*

Note: *You can also unlock the cord through your vehicle touchscreen. If the cord still does not unlock, please contact roadside assistance.*

Note: *If the charging equipment remains connected, the charge port relocks in a short period of time. Charging does not resume.*

Note: *You cannot shift your vehicle out of park (P) until you remove the charge coupler handle.*

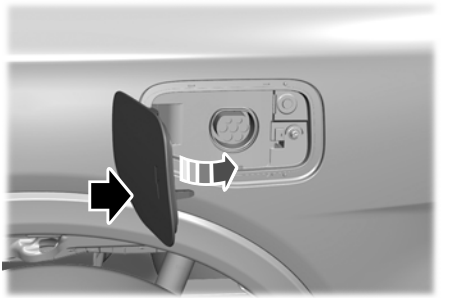

2. Press the center right-hand edge of the charge port door to close.

CHARGING IN PUBLIC

AC charging preserves the health of the high voltage battery for longer high voltage battery life.

When AC charging, keep your vehicle plugged in when outside temperatures are very high or low. This enables the system to maintain the high voltage battery for best performance.

When using an AC charge station with cables attached, choose charge station cord coupler where the same identifier symbol can be seen.

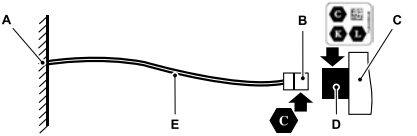

A AC charge station.
B Charge coupler.
C Vehicle.
D Charge port receptacle.
E Cable.

1. Put your vehicle in park (P).

Note: *Your vehicle must be in park (P) to charge.*

2. Press the center right hand edge of the charge port door and then release to open the door.
3. Select the appropriate charge station coupler.
4. Plug the charge coupler into the charge port receptacle on your vehicle.

Note: *Your vehicle will lock to the charge coupler.*

Note: *When you plug in your vehicle, it will start charging to 100% by default unless scheduled charging has been set up for this location.*

Note: *When the handle is properly engaged the light ring will illuminate. This indicates the beginning of a normal charge cycle.*

Note: *There could be a delay in light ring illumination due to vehicle internal communications.*

Information about the public charge stations is available through the app located in the vehicle touchscreen as well as the vehicle app on a mobile device with pricing, power levels, and real time availability. Rates for charging varies by power level, provider, location, and time of day.

Note: *If your vehicle does not have the customer connectivity settings option in the vehicle touchscreen, the app may not function as intended.*

Note: *Depending on the region, the functionality of the public charging app may not be supported and charge function may not operate as stated.*

When charging your vehicle at a BlueOval Charge Network station, use the vehicle App to activate and pay for charging. You can also just plug in to activate charging at Plug & Charge capable stations. If the charging station is not in the BlueOval Charge Network, use the directions on the charge station to activate the charger.

For more information, visit www.owner.ford.com.

Stopping Charging

1. Push the coupler unlock button on the light ring and remove the charge coupler handle from the vehicle.

Note: *Do not attempt to remove the charge coupler before you unlock it. Do not use any kind of tool to try and remove a locked charge coupler. Doing so could damage your vehicle and the charge coupler.*

Note: *You cannot unlock the charge coupler handle unless the vehicle remote is near the vehicle.*

Note: *You can also unlock the cord through your vehicle touchscreen. If the cord still does not unlock, please contact roadside assistance.*

Note: *If the charging equipment remains connected, the charge port relocks in a short period of time. Charging does not resume.*

Note: *You cannot shift your vehicle out of park (P) until you remove the charge coupler handle.*

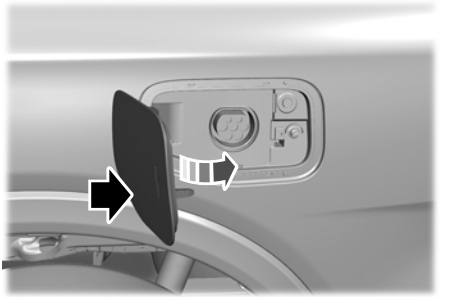

2. Press the center right-hand edge of the charge port door to close.

CHARGE COUPLER MANUAL RELEASE

If your vehicle does not unlock the charge coupler, you can manually release it.

Releasing the charge coupler:

1. Switch off your vehicle.
2. Open the tailgate.
3. Remove the inner access panel on the left hand side of the bed.

Ranger (TRA, TRB) Vehicles Built From: 01-11-2024, CG4010en enGBR, Edition date: 202407, DOM

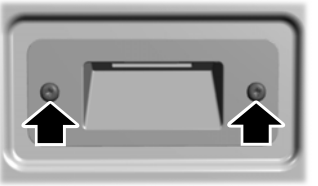

4. Locate the manual release mechanism in the gap of the inner access panel.
5. Firmly pull the manual release mechanism pull ring towards the center of your vehicle. Once pulled, make sure you do not tangle the pull ring cord as it resets on the next charge session.

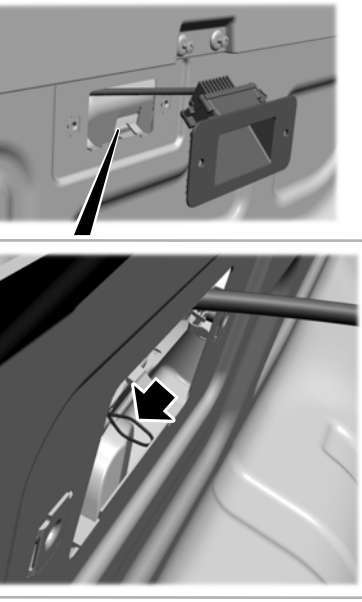

6. Remove the charge coupler from the charge port.
7. Reinstall the inner access panel cover and place the tool back in the glove compartment.

Note: *The next time you plug in to charge your vehicle, the locking mechanism re-engages and the pull ring resets.*

CHARGING SETTINGS

You can schedule charging to take advantage of lower-cost electricity rates during off-peak hours if you have signed up for a time of use pricing plan with your utility provider. You can also set an upper charge limit for your battery and a departure time and cabin temperature so your vehicle is ready to go when you are.

Scheduled charging can be set up in the center display or in the vehicle app.

To view your charge settings:

1. 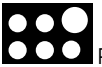 Press to open the settings menu.
2. Press Charging.

Charging Time Information

When charging, the start and estimated end time displays.

When your vehicle is at a saved charging location and not plugged in, the start and end times display based on known charging infrastructure.

Note: *Charging time information is estimated. Certain conditions could result in longer charging times.*

High Voltage Battery State of Charge

Displays the remaining charge percentage with 100% representing the total amount of energy you can get from an external charge.

Estimated Vehicle Driving Range

Displays the estimated distance the vehicle can travel with the current high voltage battery charge level.

Charging Locations

Press the edit button to set preferred charge times for a specific charging location.

Your vehicle prioritizes charging based on your preferred time settings. You can set two preferred charging time windows for weekdays and two for weekends. This feature allows you to take advantage of electric utility rate plans that offer lower pricing during certain times of day. Contact your utility company to see what plans are available.

Note: *Your vehicle will charge during your preferred time windows. Charging outside these windows only occurs when additional charging time is needed to reach the maximum charge level set for this location by your next departure time. In this case, the vehicle will typically begin charging right away after plugging in.*

Note: *You can also access this feature using the vehicle app.*

Departure and Comfort

Press the edit button for departure and comfort settings.

Setting departure times allows you to control charging schedules and warm or cool your cabin and the high voltage battery when your vehicle is plugged in, so your vehicle is ready to drive when you are. By setting a departure time, your vehicle can use your charge time settings to minimize your electricity costs but still prioritize finishing charging before your scheduled departure. The calendar view allows you to program two departure times per day for each day of the week.

Note: *By using energy from your charging source while plugged in, battery temperature can be managed for best driving performance and less energy will be needed for heating or cooling of the cabin at the start of your drive. This helps maximize your driving range.*

Note: *You can also access this feature using the vehicle app.*

Additional information and settings are displayed on the charge settings screen once charging locations and departure and comfort have been set up.

Charging Location Name

Displays when your vehicle is at a saved charging location.

Next Departure Time and Cabin Comfort Level

Displays the next departure time and associated cabin comfort setting.

On/Off Switch for Charging Locations

This switch is visible when your vehicle is at a saved charging location. Use this switch to turn your settings off and on for this location only. Switching off for this location does not delete your settings, however, you must switch back on to re-enable them.

On/Off Switch for Departure and Comfort

This switch is visible when you have at least one departure time set. Use this switch to turn all departure times off and on. Switching off departure and comfort does not delete your settings, however, you must switch back on to re-enable them.

Charging Location Setup

Follow these steps to set time and charge level preferences for a charging location.

Press the edit button for charging locations on the charge settings screen.

1. Select an address from the list of recent charge locations. If the previously saved charge locations are not listed, then you must first select add new location. You can also edit settings for previously saved locations.
2. Confirm that this is the location you want to save with the help of the map view. Edit the location name if desired and set a maximum charge level. Press next.

Note: *The name of locations cannot start with a blank character and cannot contain special characters.*

Note: *Charging will stop when your vehicle reaches the maximum charge level setting.*

3. Set preferred charging times for weekday and/or weekend by pressing and dragging along the 24 hour time wheel. You can set up to two blocks of time (charge windows). Press next once you have your desired time settings for weekday and weekend.

Note: *Selecting all or none of the 24 hours results in any time of day given equal priority for charging.*

4. The summary screen displays your settings for this location. Press save or press the left arrow to go back and change your settings. Whenever your vehicle is at a saved charging location, the charge settings screen displays the location name, and the charging times are based on your preferred time settings for that location plus the next departure time.

Note: *Reaching your max charge level by your next departure time is always the priority. When charge times are set, charging outside your preferred charging time windows could be necessary in order to finish by your next departure time. In this case, the vehicle will typically begin charging right away after plugging in.*

Departure and Comfort Setup

Follow these steps to set departure times and cabin comfort level

1. Press the edit button for departure and comfort on the charge settings screen.
2. Select a time for each day of the week you want your settings to apply. Select the hour and minutes as well as your desired comfort level. Your selected days/times now display your departure and comfort settings. Press Save to apply your settings. The next departure display on the charge settings screen will update appropriately.

Note: *Save your departure settings before selecting additional days/times. The process must be repeated in order to add additional unique departure times and comfort levels.*

Note: *Cabin conditioning comfort level may vary depending on if you plug into a normal household outlet or a higher power outlet or charging station. The power available for conditioning is limited to the charging station power available. At low ambient temperatures and low charge power, a small amount of high voltage battery power in addition to the charging power could be used to heat the cabin.*

Charge Status

Shows the present state of charging system.

Charge Status	Details
Will charge when plugged in	The vehicle is unplugged and will start charging once plugged in.
Will wait for preferred charging time	The vehicle is unplugged at a location with charging time preferences enabled. Charging is scheduled to start at the time displayed based on your settings. You must plug in prior to the start time shown for the vehicle to begin charging at that time.
Waiting for preferred charging time	The vehicle is plugged in at a location with charging time preferences enabled. Charging starts at the time displayed, which is based on your charge time settings.

Ranger (TRA, TRB) Vehicles Built From: 01-11-2024, CG4010en enGBR, Edition date: 202407, DOM

Charge Status	Details
Charging stopped	The vehicle is plugged in and charging has been stopped through the vehicle app.
Charging	The vehicle is plugged in and charging.
Charged	The vehicle finished charging to the max charge limit setting.
Charging 12V battery	The vehicle is plugged in and charging the 12V battery.
Conditioning the cabin	The vehicle is plugged in and the climate control system is operating according to the departure and comfort settings.
Conditioning the battery	The vehicle is plugged in and conditioning the high voltage battery.
Vehicle charging fault	The vehicle is plugged in and there is a fault within the vehicle charging system. Unplug and plug back in. If the fault is still present, contact your authorized EV certified dealer.
Charge station fault	The vehicle is plugged in and a fault has been detected with the charging station or charging cord. Check the charging cord and the charging station or electrical supply.
Charge station not detected	A charging coupler has been plugged into the vehicle but there is no connection with a charging power source.
Charge station paused	The vehicle is plugged in and charging has been paused at the charging station.

Charge Status Indicators

Displays when your vehicle is plugged in.

Not charging due to a fault.

Not currently charging.

Charging.

Waiting to charge based on charge time settings.

USING YOUR VEHICLE APP AND CHARGING

The vehicle app allows you to monitor and manage your vehicle's charging, including charge schedules and preferences.

For more information, visit www.owner.ford.com.

Ranger (TRA, TRB) Vehicles Built From: 01-11-2024, CG4010en enGBR, Edition date: 202407, DOM

CHARGING EQUIPMENT IDENTIFICATION SYMBOLS

Identifier symbol visible on vehicle cord couplers, charge station cord couplers and vehicle charge ports.

Supply Type	Standard	Configuration	Type of Accessory	Voltage Range
AC	EN 62196-2	Type 2	Vehicle coupler, charge station coupler and vehicle charge port.	Lower or equal to 480 volt RMS

Identifier symbol visible on charge station ports and your public charge cord coupler.

Supply Type	Standard	Configuration	Type of Accessory	Voltage Range
AC	EN 62196-2	Type 2	Charge station port, public charge cord coupler.	Lower or equal to 480 volt RMS

Charge station coupler identifier symbol.

Supply Type	Standard	Configuration	Type of Accessory	Voltage Range
DC	EN 62196-3	FF	Vehicle coupler, vehicle charge port, and charge station coupler.	50 volt to 500 volt

Charge station coupler identifier symbol.

Supply Type	Standard	Configuration	Type of Accessory	Voltage Range
DC	EN 62196-3	FF	Vehicle coupler, vehicle charge port, and charge station coupler.	200 volt to 920 volt

CHARGING YOUR VEHICLE – TROUBLESHOOTING

CHARGING YOUR VEHICLE – INFORMATION MESSAGES

Message	Action
Vehicle plugged in?	Your vehicle needs confirmation that you unplugged it before allowing a start. Make sure your vehicle is unplugged and you respond to the message before starting your vehicle.
Unplug prior to starting vehicle	Your vehicle detects it is still plugged in after you attempt to start it.
Charge Station Fault See Manual	A charging fault has been detected. Check the charging cord and the charge station or electrical supply.
Charge Station Communication Error Contact Station Provider	The charging station cannot communicate with your vehicle. Contact the station provider.

Ranger (TRA, TRB) Vehicles Built From: 01-11-2024, CG4010en enGBR, Edition date: 202407, DOM

CHARGING YOUR VEHICLE – FREQUENTLY ASKED QUESTIONS

Why does my vehicle have a hum or fan noise when charging?

- A hum or a fan noise could be present when charging the high voltage battery. This is a normal operation as your vehicle is keeping the battery cool while charging.

Ranger (TRA, TRB) Vehicles Built From: 01-11-2024, CG4010en enGBR, Edition date: 202407, DOM

MANUAL TRANSMISSION PRECAUTIONS

WARNING: Always set the parking brake fully and make sure you shift the gearshift lever to first gear. Switch the ignition off and remove the key whenever you leave your vehicle.

Do not rest your hand on the gearshift lever or use the gearshift lever to hang and support objects. This could cause damage to the transmission not covered by the vehicle warranty.

Do not rest your foot on the clutch pedal or use the clutch pedal to keep your vehicle stationary when waiting on a hill. This could cause damage to the clutch not covered by the vehicle warranty.

Failure to fully press the clutch pedal could cause increased shift efforts, or premature transmission wear to components or damage to the transmission.

If any gear is not fully engaged, fully press the clutch pedal and shift into neutral. Release the clutch pedal for a moment, fully press the clutch pedal again and shift into desired gear.

SHIFTING INTO REVERSE

Do not shift into reverse when your vehicle is moving. This could cause damage to the transmission not covered by the vehicle Warranty.

1. Fully press the brake pedal.
2. Fully press the clutch pedal and shift into neutral.

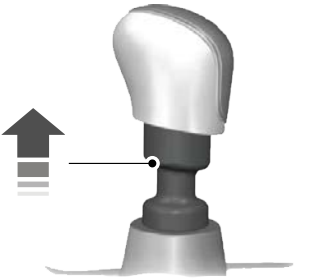

3. Raise the collar and shift into reverse.

MANUAL TRANSMISSION SHIFT INDICATORS

It illuminates to advise you that shifting gear may give better fuel economy or lower emissions.

Ranger (TRA, TRB) Vehicles Built From: 01-11-2024, CG4010en enGBR, Edition date: 202407, DOM

CHECKING THE MANUAL TRANSMISSION FLUID LEVEL

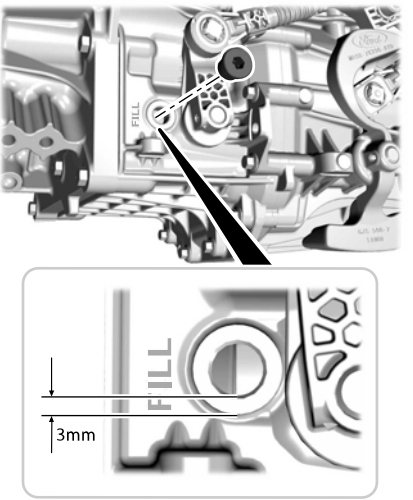

Transmission fluid fill level is 3 mm (0.12 in) from the oil fill plug.

CHECKING THE CLUTCH FLUID LEVEL

The clutch and brake systems share the same fluid reservoir. See **Checking the Brake Fluid** (page 274).

MANUAL TRANSMISSION FLUID CAPACITY AND SPECIFICATION

See **Manual Transmission Fluid Capacity and Specification** (page 580).

CLUTCH FLUID CAPACITY AND SPECIFICATION

See **Capacities and Specifications** (page 555).

AUTOMATIC TRANSMISSION POSITIONS

AUTOMATIC TRANSMISSION PRECAUTIONS

WARNING: Apply the parking brake, shift into park (P), switch the vehicle off and remove the key or remote control before you leave your vehicle. Failure to follow this instruction could result in personal injury or death.

WARNING: When your vehicle is stationary, keep the brake pedal fully pressed when shifting gears. Failure to follow this instruction could result in personal injury, death or property damage.

WARNING: Do not apply the brake pedal and accelerator pedal simultaneously. Applying both pedals simultaneously for more than a few seconds limits vehicle performance, which may result in difficulty maintaining speed in traffic and could lead to serious injury.

SHIFTING YOUR VEHICLE INTO GEAR - VEHICLES WITH: ELECTRONIC SHIFT

The selector is on the center console.

1. Press and hold the brake pedal.
2. Move the lever to select a position.

Note: *The position illuminates on the selector.*

3. Press the manual (M) button when your vehicle is in drive (D) to enter or exit mode.

SHIFTING YOUR VEHICLE INTO GEAR - VEHICLES WITH: MECHANICAL SHIFT

The selector is on the center console.

1. Press and hold the brake pedal.
2. Move the lever to select a position.

PARK (P) - VEHICLES WITH: ELECTRONIC SHIFT

WARNING: Shift into park (P) only when your vehicle is stationary.

In park (P) power is not transmitted to the driven wheels.

Note: *A tone sounds if you attempt to exit your vehicle without the vehicle in park (P).*

Note: *Your vehicle may not shift out of park (P) if the 12 V battery has run out of charge.*

Note: *Your vehicle may not shift out of park (P) if a fuse is blown.*

Note: *Your vehicle may not shift out of park (P) unless the key or remote control is inside your vehicle.*

Note: *The electronic parking brake could apply when you power your vehicle on with the selector in park (P).*

Note: *The electronic parking brake could apply if you shift to park (P) without fully pressing the brake pedal.*

Note: *The electronic parking brake could apply if you shift to park (P) on a slope.*

Note: *Do not manually release the parking brake when the selector is in park (P). See* ***Automatically Releasing the Electric Parking Brake*** *(page 281).*

Note: *Your vehicle could shift into park (P) if you attempt to exit your vehicle without the vehicle in park (P). See* ***Automatic Return to Park (P)*** *(page 255).*

Ranger (TRA, TRB) Vehicles Built From: 01-11-2024, CG4010en enGBR, Edition date: 202407, DOM

Note: *A tone could sound when you select park (P).*

PARK (P) - VEHICLES WITH: MECHANICAL SHIFT

WARNING: Shift into park (P) only when your vehicle is stationary.

In park (P) power is not transmitted to the driven wheels.

Note: *A tone sounds if you attempt to exit your vehicle without the vehicle in park (P).*

Note: *Your vehicle may not shift out of park (P) if the 12 V battery has run out of charge.*

Note: *Your vehicle may not shift out of park (P) if a fuse is blown.*

Note: *Your vehicle may not shift out of park (P) unless the key or remote control is inside your vehicle.*

Note: *The electronic parking brake could apply when you power your vehicle on with the selector in park (P).*

Note: *The electronic parking brake could apply if you shift to park (P) without fully pressing the brake pedal.*

Note: *The electronic parking brake could apply if you shift to park (P) on a slope.*

Note: *Do not manually release the parking brake when the selector is in park (P). See* ***Automatically Releasing the Electric Parking Brake*** *(page 281).*

REVERSE (R)

WARNING: Shift into reverse (R) only when your vehicle is stationary.

In reverse (R) power is transmitted to the driven wheels.

NEUTRAL (N)

WARNING: In neutral (N) your vehicle is free to roll.

In neutral (N) power is not transmitted to the driven wheels.

DRIVE (D)

In drive (D) power is transmitted to the driven wheels.

Note: *Progressive range selection is available in drive (D). See* ***Using Progressive Range Selection*** *(page 257).*

MANUAL (M) - VEHICLES WITH: ELECTRONIC SHIFT

In manual (M) you can select a specific gear. See **Manually Shifting Gears** (page 253).

Note: *We recommend using this mode for driving on hilly or mountainous roads or when towing a trailer.*

MANUAL (M) - VEHICLES WITH: MECHANICAL SHIFT

In manual (M) you can select a specific gear.

Note: *We recommend using this mode for driving on hilly or mountainous roads or when towing a trailer. See* ***Towing a Trailer*** *(page 411).*

AUTOMATIC TRANSMISSION POSITION INDICATORS

The instrument cluster displays the current position.

Ranger (TRA, TRB) Vehicles Built From: 01-11-2024, CG4010en enGBR, Edition date: 202407, DOM

Note: *The position could illuminate on the transmission selector.*

MANUALLY SHIFTING GEARS - EXCLUDING: RAPTOR

Shifting Using the Buttons on the Selector Lever

The instrument cluster displays the current gear. The current gear flashes when your vehicle cannot shift into the requested gear. Your vehicle will not shift if the requested gear raises or lowers the engine speed beyond the limit.

Your vehicle could shift when you fully press the accelerator or brake pedal.

Note: *Prolonged driving with high engine speed could cause vehicle damage not covered by vehicle warranty.*

Note: *Drive modes could affect when the vehicle shifts into the requested gear.*

Electronic Shifter

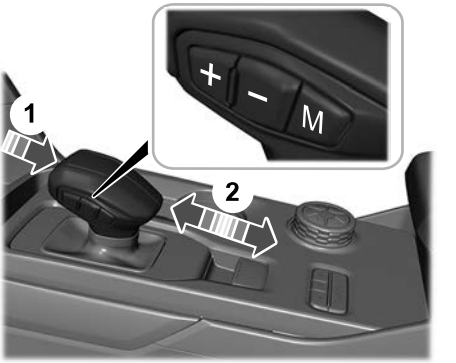

Mechanical Shifter

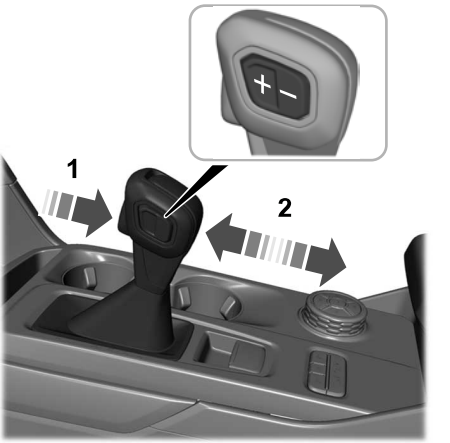

Manually Shifting Gears in Manual (M)

Use this feature to select a specific gear.

Note: *We recommend using this feature for engine braking, driving on hilly or mountainous roads, or when towing a trailer. See* ***Towing a Trailer*** *(page 411).*

Press any button to switch the feature on.

Press the upper (+) button to upshift.

Press the lower (-) button to downshift.

Shift to drive (D) to switch the feature off.

MANUALLY SHIFTING GEARS - RAPTOR

Shifting Using the Paddle Shifters

The instrument cluster displays the current gear. The current gear flashes when your vehicle cannot shift into the requested gear. Your vehicle does not shift if the requested gear raises or lowers the engine speed beyond the limit.

Your vehicle could shift when you fully press the accelerator or brake pedal.

Note: *Prolonged driving with high engine speed could cause vehicle damage not covered by the vehicle warranty.*

Note: *Drive modes could affect when the vehicle shifts into the requested gear.*

Manually Shifting Gears in Drive (D)

Use this feature to temporarily change gears.

Note: *We recommend using this feature for engine braking or driving on hilly or mountainous roads.*

- Pull any paddle to switch the feature on.
- Pull the right (+) paddle to upshift.
- Pull the left (-) paddle to downshift.
- Hold the (+) paddle for a few seconds to switch the feature off.

Note: *The feature switches off after a short period of time if you do not pull either paddle.*

Manually Shifting Gears in Manual (M)

Use this feature to select a specific gear.

Note: *We recommend using this feature for engine braking, driving on hilly or mountainous roads, or when towing a trailer. See* ***Towing a Trailer*** *(page 411).*

- Shift to manual (M) or with the selector in drive (D) press the manual (M) button to switch the feature on.
- Pull the right (+) paddle to upshift.
- Pull the left (-) paddle to downshift.
- Shift to drive (D) or press the manual (M) button again to switch the feature off.

TEMPORARY NEUTRAL MODE

How Does Temporary Neutral Mode Work

Use this mode to keep your vehicle in neutral (N), for a limited time, when you exit your vehicle or switch your vehicle off. For example, if you exit your vehicle before an automatic car wash.

Note: *You do not need to use this mode at an automatic car wash if you shift into neutral (N) and stay in your vehicle with power on.*

Ranger (TRA, TRB) Vehicles Built From: 01-11-2024, CG4010en enGBR, Edition date: 202407, DOM

Note: *Do not tow your vehicle in this mode.*

Note: *Automatic return to park (P) is delayed when your vehicle is in this mode. See* ***Automatic Return to Park (P)*** *(page 255).*

Temporary Neutral Mode Limitations

This mode could be unavailable if your 12 V battery charge level is low. Connect an external power source and attempt the procedure again.

Your vehicle could shift to park (P) after 30 minutes, or when the vehicle battery charge level is low. Prolonged use of this mode can cause the 12 V battery to run out of charge.

This mode could be unavailable if your vehicle is below operating temperature. Warm up your vehicle and attempt the procedure again.

Do not tow your vehicle in this mode. Failure to follow these instructions could result in vehicle damage not covered by the vehicle warranty.

Entering Temporary Neutral Mode

1. Bring your vehicle to a complete stop.
2. Press and hold the brake pedal.
3. Power your vehicle on.
4. Shift into neutral (N).

Note: *An instructional message appears.*

5. Press the manual (M) button within a few seconds.

Note: *A confirmation message appears when your vehicle enters the mode.*

6. Release the brake pedal.

Note: *Your vehicle is free to roll.*

7. Switch your vehicle off.

Note: *Do not tow your vehicle in this mode.*

Note: *The neutral (N) indicator on the transmission selector may flash in this mode.*

Exiting Temporary Neutral Mode

1. Press the brake pedal.
2. Shift into park (P), or power your vehicle on and shift into drive (D) or reverse (R).

AUTOMATIC RETURN TO PARK (P)

How Does Automatic Return to Park (P) Work

Your vehicle shifts into park (P) when your vehicle is stationary and any of the following occur:

- You switch the vehicle off.
- You open the driver door with the driver seatbelt unfastened.
- You unfasten the driver seatbelt when the driver door is open.

Note: *Do not use automatic return to park (P) when your vehicle is moving, except in an emergency. See* ***Starting and Stopping the Engine*** *(page 187).*

Automatic Return to Park (P) Limitations

Automatic return to park (P) may not work if any of the following occur:

- The driver door ajar sensor is malfunctioning.
- The driver seatbelt sensor is malfunctioning.

See an authorized dealer if any of the following occur:

- Seatbelt indicator illuminates or tone sounds with the driver seatbelt fastened.
- Door ajar indicator does not illuminate with the driver door open.
- Door ajar indicator illuminates with the driver door closed.
- Transmission not in park message appears, with the driver door closed, after you shift out of park (P).

SHIFTING YOUR IMMOBILE VEHICLE OUT OF PARK (P)

WARNING: When doing this procedure, you need to take your vehicle out of park (P) which means your vehicle can roll freely. To avoid unwanted vehicle movement, apply the parking brake prior to doing this procedure. Use wheels chocks if appropriate.

Use this procedure to shift your vehicle out of park (P) in the event of an electrical malfunction or emergency.

Note: *This mode could be unavailable if your 12 volt battery charge level is low. Connect an external power source and attempt the procedure again.*

Note: *Your vehicle could shift to park (P) after 30 minutes, or when the vehicle battery charge level is low. Prolonged use of this mode can cause the 12 volt battery to run out of charge.*

Note: *This mode could be unavailable if your vehicle is below operating temperature. Warm up your vehicle and attempt the procedure again.*

Note: *Do not tow your vehicle in this mode. Failure to follow these instructions could result in vehicle damage not covered by the vehicle warranty.*

Shifting Your Vehicle Out of Park (P)

1. Apply the parking brake.

Note: *If the battery is out of charge, use an external power source to apply the parking brake.*

2. Power your vehicle on without your foot on the brake pedal.
3. Fully press and hold the brake pedal.
4. Fully press and hold the accelerator pedal.
5. Shift into neutral (N).
6. Press the M button within a few seconds.
7. Attempt to start your vehicle.

Note: *A confirmation message appears when your vehicle enters the mode.*

Note: *You must complete this procedure within 15 seconds. If your vehicle shifts into park (P) attempt the procedure again.*

8. Release the accelerator and brake pedals.
9. Release the parking brake.

Note: *Your vehicle is free to roll.*

10. Switch your vehicle off.

Note: *Do not tow your vehicle in this mode.*

Returning Your Vehicle to Normal Mode

1. Press the brake pedal.
2. Shift into park (P).

Ranger (TRA, TRB) Vehicles Built From: 01-11-2024, CG4010en enGBR, Edition date: 202407, DOM

AUTOMATIC TRANSMISSION AUDIBLE WARNINGS - VEHICLES WITH: ELECTRONIC SHIFT

Transmission Not In Park (P) Audible Warning

Sounds if you open the driver door before shifting into park (P).

AUTOMATIC TRANSMISSION AUDIBLE WARNINGS - VEHICLES WITH: MECHANICAL SHIFT

Transmission Not in Park (P) Audible Warning

Sounds if any of the following occur:

- You switch your vehicle off before shifting into park (P).
- You open the driver door before shifting into park (P).

USING PROGRESSIVE RANGE SELECTION

Progressive range selection gives you the ability to lock out gears from the automatic shifting range. This could provide you with an improved driving experience by reducing transmission shifts, for example in slippery conditions or steep slopes or when towing a trailer. See **Towing a Trailer** (page 411).

With the transmission in drive (D), press the minus (-) button to begin switching the feature on.

Press the minus (-) button again to continue locking out higher gears. Beginning with the highest gear, the instrument cluster indicates the current gear and highest gear available. For example, press the minus (-) button twice to lock out 10th and 9th gears.

Note: *The instrument cluster indicates the current gear and highest gear available.*

Press the plus (+) button to unlock gears to allow the transmission to shift to higher gears.

Note: *The transmission automatically shifts within the gear range you select.*

Ranger (TRA, TRB) Vehicles Built From: 01-11-2024, CG4010en enGBR, Edition date: 202407, DOM

HOW DOES FOUR-WHEEL DRIVE WORK - 4X4 WITH PART TIME ENGAGEMENT

4x4 With Part Time Engagement

This system offers the driver two-wheel drive high, four-wheel drive high, and four-wheel drive low as available modes of operation.

When you select either four-wheel drive high or four-wheel drive low, the system provides mechanically locked four-wheel drive power to both the front and rear wheels for use in off-road or slippery conditions such as deep snow, sand or mud.

Selecting four-wheel drive low also provides additional gearing for increased torque multiplication for conditions like deep sand, steep slopes, or pulling heavy objects.

HOW DOES FOUR-WHEEL DRIVE WORK - ADVANCED 4X4 WITH 4A MODE

Advanced 4x4 With Automatic On Demand Engagement

This system monitors various vehicle sensory inputs to provide an increased level of performance. This system offers the driver two-wheel drive high, four-wheel drive auto, four-wheel drive high, and four-wheel drive low as available modes of operation.

When you select four-wheel drive auto, the system continuously varies power to the front wheels for optimum performance for all on-road conditions.

When you select either four-wheel drive high or four-wheel drive low, the system provides electronically locked power to the front and rear wheels for use in off-road or slippery conditions such as deep snow, sand or mud.

Selecting four-wheel drive low also provides additional gearing for increased torque multiplication for conditions like deep sand, steep slopes, or pulling heavy objects.

FOUR-WHEEL DRIVE LIMITATIONS - EXCLUDING: RAPTOR

Do not use four-wheel drive high (4H) or four-wheel drive low (4L) mode on dry, hard surfaced roads. Doing so can produce excessive noise, increase tire wear and damage drive components.

4H or 4L mode is only for use on consistently slippery or loose surfaces. Use of 4L mode on these surfaces could produce some noise, such as occasional clunks, but should not damage drive components.

For vehicles with an electronic shift-on-the-fly transfer case, the driveline could become mechanically blocked when attempting to shift out of a four-wheel drive mode on dry, hard surfaced roads.

Note: *If your vehicle is equipped with the 4x4 part-time selectable engagement transfer case and you are transitioning from consistently loose or slippery surfaces, be sure the four-wheel drive system is not mechanically blocked once you are on dry, hard surfaced roads in two-wheel drive high.*

Note: *In certain scenarios, where the four-wheel drive system has difficulty engaging, a* ***To engage 4x4 slow to 3 mph*** *or* ***To engage 4x4 slow to 5 km/h*** *message could appear in the instrument cluster. This message may also appear when engaging the four-wheel drive system in extreme cold climates at the beginning of the drive cycle. Once the driveline warms up, shifting to four-wheel drive can resume as normal.*

Operating Four-Wheel Drive with a Spare or Mismatched Tires

On four-wheel drive vehicles, the size of the spare tire can affect the four-wheel drive system.

If there is a significant difference between the size of the spare tire and the remaining tires, you could have limited four-wheel drive functionality, added noise, discomfort and driveline damage.

Due to normal tire wear, your spare tire is not necessarily the same size as your on-road tires, which makes your spare tire a dissimilar size. Use the spare tire on a limited basis only.

When driving with a dissimilar wheel and tire assembly do not:

- Exceed 80 km/h (50 mph) when operating in a four-wheel drive mode.
- Select a four-wheel drive mode unless the vehicle is stationary.
- Use a four-wheel drive mode on dry pavement.

You could have limited four-wheel drive functionality when driving with a dissimilar wheel and tire assembly, especially when driving in a mechanically locked four-wheel drive mode. You can experience the following:

- Additional noise from the transfer case or other drive components.
- Difficulty shifting in and out of a mechanically locked four-wheel drive mode.
- Driveline component damage.

Note: *When driving with a spare tire, do not switch on four-wheel drive mode unless you need to get your vehicle unstuck.*

Immediately after getting your vehicle unstuck, shift to 2H by performing the following steps:

1. Come to a stop on a flat, horizontal surface.
2. Shift the transmission to park (P) for automatic transmissions and neutral (N) for manual transmissions.
3. Switch to two-wheel drive mode.
4. Shift the transmission to reverse (R).
5. Shift the transmission to drive (D) for automatic transmissions and to first gear for manual transmissions to make sure the transfer case system is not trapped in place.

Mechanical Shift Blocking

On vehicles with an electronic shift-on-the-fly transfer case, the transfer case distributes torque to the front wheels by mechanically interlocking the front and rear driveshafts together. Various external factors can affect shifting performance of this type of system including, but not limited to:

- Vehicle acceleration.
- Dissimilar tire sizes.
- High steering input.

Ranger (TRA, TRB) Vehicles Built From: 01-11-2024, CG4010en enGBR, Edition date: 202407, DOM

For vehicles with an electronic shift-on-the-fly transfer case, when shifting into two-wheel drive high (2H) on dry, hard surfaced roads, we recommend you preform the following procedure to reduce the likelihood of a mechanical shift block:

1. While driving straight, come to a complete stop on a flat, horizontal surface.
2. Shift the transmission into park (P) for automatic transmissions or press the clutch for vehicles with a manual transmission.
3. Select 2H and wait for the 2H LED to become solid.
4. Shift the transmission into reverse (R) for automatic transmissions or select reverse (R) and release the clutch for vehicles with a manual transmission. Allow the vehicle to roll back approximately 1 m (3 ft) and press the brake.
5. Shift the transmission into drive (D) for automatic transmissions or press the clutch in and select a forward gear and release the clutch for vehicles with a manual transmission. Allow the vehicle to roll forward approximately 1 m (3 ft).

If the system is mechanically blocked or if the system detects a mechanical shift block at speed after two-wheel drive high (2H) has been selected, a message can appear momentarily indicating that four-wheel drive is unable to disengage. One or more of the following actions can relieve the mechanical shift block:

- Momentary acceleration.
- Momentary braking.
- Bringing the vehicle to a stop.
- Shifting the transmission to neutral (N) and back to drive (D).
- Shifting the transmission to reverse(R) and back to drive (D).
- Driving the vehicle around a tight turn at a slow speed.

FOUR-WHEEL DRIVE LIMITATIONS - RAPTOR

Do not use four-wheel drive high (4H) or four-wheel drive low (4L) mode on dry, hard surfaced roads. Doing so can produce excessive noise, increase tire wear and damage drive components.

4H or 4L mode is only for use on consistently slippery or loose surfaces. Use of 4L mode on these surfaces could produce some noise, such as occasional clunks, but should not damage drive components.

Operating Four-Wheel Drive with a Spare or Mismatched Tires

On four-wheel drive vehicles, the size of the spare tire can affect the four-wheel drive system.

If there is a significant difference between the size of the spare tire and the remaining tires, you could have limited four-wheel drive functionality, added noise, discomfort and driveline damage.

Due to normal tire wear, your spare tire is not necessarily the same size as your on-road tires, which makes your spare tire a dissimilar size. Use the spare tire on a limited basis only.

When driving with a dissimilar wheel and tire assembly do not:

- Exceed 80 km/h (50 mph) when operating in a four-wheel drive mode.
- Select a four-wheel drive mode unless the vehicle is stationary.
- Use a four-wheel drive mode on dry pavement.

You could have limited four-wheel drive functionality when driving with a dissimilar wheel and tire assembly, especially when driving in a mechanically locked four-wheel drive mode. You can experience the following:

- Additional noise from the transfer case or other drive components.
- Difficulty shifting in and out of a mechanically locked four-wheel drive mode.
- Driveline component damage.

Note: *When driving with a spare tire, do not switch on four-wheel drive mode unless you need to get your vehicle unstuck.*

Immediately after getting your vehicle unstuck, shift to 2H.

SWITCHING FOUR-WHEEL DRIVE ON AND OFF

A vehicle that comes with four-wheel drive, when selected, has the ability to use all four wheels to power itself. This increases traction, which may enable you to safely drive over terrain and road conditions that a conventional two-wheel drive vehicle cannot.

On some four-wheel drive models, the initial shift from two-wheel drive to four-wheel drive while the vehicle is moving can cause a momentary clunk and ratcheting sound. These sounds are normal as the front drivetrain comes up to speed and are not cause for concern.

SELECTING A FOUR-WHEEL DRIVE MODE - 4X4 WITH PART TIME ENGAGEMENT

Depending on the vehicle configuration, your vehicle could have either a push button or a rotary four-wheel drive mode selector. Push the button or rotate the four-wheel drive mode selector to select the preferred four-wheel drive mode.

- 2H - Two-wheel drive high.
- 4H - Four-wheel drive high. See **Four-Wheel Drive High** (page 263).
- 4L - Four-wheel drive low. See **Four-Wheel Drive Low** (page 264).

Note: *Do not perform this operation if the rear wheels are slipping, while applying the accelerator pedal or when driving in a tight turn.*

Note: *Momentarily releasing the accelerator pedal while a shift in progress message displays improves engagement or disengagement performance.*

Note: *Do not perform this operation when cruise control or trail control is selected and active. The system may not shift as expected.*

Note: *If your vehicle is equipped with a push button four-wheel drive mode selector and the light is solid, the system has achieved the preferred four-wheel drive mode. When a selected four-wheel drive mode light is blinking, the system is attempting to shift to that specific mode.*

Note: *If your vehicle is equipped with a rotary four-wheel drive mode selector, the selector position indicates the preferred four-wheel drive mode. This does not indicate that the system has achieved the preferred four-wheel drive mode.*

Shifting to or from Four-Wheel Drive Low

1. Bring your vehicle to a speed of 0 km/h (0 mph).
2. For vehicles with an automatic transmission, place in neutral (N). For vehicles with a manual transmission, fully press the clutch pedal.
3. Push or rotate the four-wheel drive mode selector to the preferred four-wheel drive mode.

Note: *A **4x4 Shift in Progress** message appears in the instrument cluster display indicating the shift is in progress. If any of the previous shift conditions are not met, the shift does not occur and the instrument cluster display guides the driver through the proper shifting procedures.*

Note: *If **Shift Delayed Drive Forward** displays in the instrument cluster display, place the transmission in a forward gear, move your vehicle forward approximately 1.5 m (5 ft), and shift the transmission back to neutral (N) to allow the transfer case to complete the range shift.*

SELECTING A FOUR-WHEEL DRIVE MODE - ADVANCED 4X4 WITH 4A MODE

Push the button to select the four-wheel drive mode.

- 2H - Two-wheel drive high.
- 4A - Four-wheel drive auto. See **Four-Wheel Drive Auto** (page 263).

- 4H - Four-wheel drive high. See **Four-Wheel Drive High** (page 263).
- 4L - Four-wheel drive low. See **Four-Wheel Drive Low** (page 264).

Note: *Do not perform this operation if the rear wheels are slipping or while applying the accelerator pedal.*

Note: *When the light is solid, the system has achieved the desired four-wheel drive mode. When a selected four-wheel drive mode LED is blinking, the system is attempting to shift to that specific mode.*

Note: *When all lights are blinking have your vehicle serviced as soon as possible.*

Shifting to or from Four-Wheel Drive Low

1. Bring your vehicle to a speed of 0 km/h (0 mph).
2. For vehicles with an automatic transmission, place in neutral (N). For vehicles with a manual transmission, fully press the clutch pedal.
3. Push the four-wheel drive mode selector to the four-wheel drive mode you prefer.

Note: *A **4x4 shift in progress** message appears in the instrument cluster display indicating the shift is in progress. If any of the previous shift conditions are not met, the shift will not occur and the instrument cluster display guides you through the proper shifting procedures.*

Note: *If **Shift delayed Pull forward** displays in the instrument cluster display, place the transmission in a forward gear, move your vehicle forward approximately 1.5 m (5 ft), and shift the transmission back to neutral (N) to allow the transfer case to complete the range shift.*

FOUR-WHEEL DRIVE MODES

TWO-WHEEL DRIVE HIGH

Two-wheel drive high is for general on-road driving. Power is sent to the rear wheels only.

Note: *Two-wheel drive high can turn on or off based on Drive Mode selection See **Selecting a Drive Mode** (page 339).*

FOUR-WHEEL DRIVE AUTO

Four-wheel drive auto provides electronically controlled four-wheel drive power to both the front and rear wheels, as required, for increased traction in varying on-road conditions. The four-wheel drive auto tuning varies based on selected Drive Mode. See **Selecting a Drive Mode** (page 343).

Note: *Four-wheel drive auto can turn on or off automatically based on Drive Mode selection. See **Selecting a Drive Mode** (page 343).*

FOUR-WHEEL DRIVE HIGH

Four-wheel drive high provides electronically or mechanically locked four-wheel drive power to both the front and rear wheels for use in off-road or winter conditions such as deep snow, sand or mud. This mode is not for use on dry pavement.

Note: *Four-wheel drive high can turn on or off automatically based on Drive Mode selection. See **Selecting a Drive Mode** (page 343).*

Ranger (TRA, TRB) Vehicles Built From: 01-11-2024, CG4010en enGBR, Edition date: 202407, DOM

FOUR-WHEEL DRIVE LOW

Four-wheel drive low provides electronically or mechanically locked four-wheel drive power to both the front and rear wheels for use on low traction surfaces, but does so with additional gearing for increased torque multiplication. This mode is only for off-road conditions such as deep sand, steep slopes, or pulling heavy objects.

Note: *Four-wheel drive low can turn on or off automatically based on drive mode selection. See* ***Selecting a Drive Mode*** *(page 343).*

FOUR-WHEEL DRIVE INDICATORS

When the indicator lights are solid the system has achieved the desired four-wheel drive mode.

Note: *Depending on vehicle configuration, if your vehicle is equipped with a rotary four-wheel drive mode selector the indicator lights will blink when the system is attempting to shift to that specific four-wheel drive mode.*

Two-wheel Drive High

Illuminates briefly when you select two-wheel drive high.

Four-wheel Drive Auto

Illuminates when you select four-wheel drive auto.

Four-wheel Drive High

Illuminates when you select four-wheel drive high.

Four-wheel Drive Low

Illuminates when you select four-wheel drive low.

TRANSFER CASE FLUID CAPACITY AND SPECIFICATION

See **Transfer Case Fluid Capacity and Specification** (page 582).

FOUR-WHEEL DRIVE – TROUBLESHOOTING

FOUR-WHEEL DRIVE – WARNING LAMPS

Illuminates when a four-wheel drive or power train fault is present.

Note: *When a system fault is present, the system can typically remain in whichever mode was selected prior to the fault condition occurring. It does not default to two-wheel drive in all circumstances. When this warning displays, have your vehicle serviced by an authorized dealer.*

FOUR-WHEEL DRIVE – INFORMATION MESSAGES

Message	Details
For 4L slow to a stop	Displays when the driver attempts to shift into four-wheel drive low (4L) when traveling at too high of a speed.
For 4L, shift to N.	Displays when the driver attempts to shift into four-wheel drive low (4L) without the transmission in neutral (N).
For 4L, press clutch.	Displays when the driver attempts to shift into four-wheel drive low (4L) without the clutch pedal pressed.
To exit 4L slow to a stop	Displays when the driver attempts to shift out of four-wheel drive low (4L) when traveling at too high of a speed.
To exit 4L, shift to N.	Displays when the driver attempts to shift out of four-wheel drive low (4L) without the transmission in neutral (N).
To exit 4L, press clutch.	Displays when the driver attempts to shift out of four-wheel drive low (4L) without the clutch pedal pressed.
4x4 shift in progress	Displays when the four-wheel drive system is shifting into and out of two-wheel drive high (2H) or between high and low ranges.
4x4 temporarily locked	Displays when the four-wheel drive system detects a driving condition which temporarily requires greater four-wheel drive performance. The system resumes normal function after the system no longer detects these driving conditions.
4x4 temporarily disabled	Displays when the four-wheel system detects elevated system temperature and temporarily stops providing power to the front wheels. The system resumes normal function when the system temperature returns to normal.
4x4 Restored	Displays when the four-wheel drive system resumes normal function.
Shift delayed Pull forward	Displays when the transfer case is not able to complete a shift and requires forward motion to complete the shift.

Ranger (TRA, TRB) Vehicles Built From: 01-11-2024, CG4010en enGBR, Edition date: 202407, DOM

Message	Details
Shift to Neutral	Displays when the system requires an additional transmission shift to neutral (N) to complete a transfer case shift.
4x4 OFF	Displays when the system has become disabled due to mismatched tires or an external fault.
Selected 4x4 mode not available in current drive mode	Displays when the driver selects a four-wheel drive mode that is not allowed in the currently drive mode.
To engage 4x4 slow to 3 mph	Displays when the system is unable to engage four-wheel drive high (4H) and requires the driver to slow down before attempting to engage.
To engage 4x4 slow to 5 km/h	Displays when the system is unable to engage four-wheel drive high (4H) and requires the driver to slow down before attempting to engage.
To engage 4x4 release accelerator pedal	Displays when the four-wheel drive system requires the accelerator pedal to be released to perform the shift into four-wheel drive mode.
4x4 Performance reduced See manual	Displays when the system has entered a degraded mode due to mismatched tires.
Check 4x4	A four-wheel drive system fault is present. Have your vehicle checked as soon as possible.
4x4 unable to disengage See manual	Displays when the four-wheel drive system detects a mechanical shift block when shifting out of four-wheel drive high (4H). See **Four-Wheel Drive Limitations** (page 260).

WHAT IS THE ELECTRONIC LOCKING DIFFERENTIAL - EXCLUDING: RAPTOR

The electronic locking differential is a device housed in the rear axle and when activated, allows both wheels on that axle to turn at the same speed. The electronic locking differential can provide additional traction should your vehicle become stuck.

You can activate the electronic locking differential and shift it on the fly within the operating speed range. The electronic locking differential automatically disengages when the vehicle speed exceeds a set value and automatically reengages when the vehicle speed goes below a set value. See **Switching the Electronic Locking Differential On and Off** (page 268). It also automatically engages based on certain selected drive modes. See **Selecting a Drive Mode** (page 339).

The electronic locking differential is for use in mud, rocks, sand, or any off-road condition where you need maximum traction. It is not for use on dry pavement.

Note: *The electronic locking differential is for off-road use only and not for use on dry pavement. Using the electronic locking differentials on dry pavement results in increased tire wear, noise and vibration or driveline damage.*

Note: *Switching the electronic locking differential off while turning results in disengagement difficulties. If the electronic locking differential has difficulty disengaging, release the accelerator pedal and turn the steering wheel back and forth in small increments while maintaining control and following a straight line.*

WHAT IS THE ELECTRONIC LOCKING DIFFERENTIAL - RAPTOR

The electronic locking differential is a device housed in the front or rear axle and, when activated allows both wheels on that axle to turn at the same speed. The electronic locking differential can provide additional traction should your vehicle become stuck. You can activate the differential electronically and shift it on the fly within the operating speed range. The electronic differential automatically disengages when the vehicle speed exceeds a set value and it automatically reengages when the vehicle speed goes below a set value. See **Switching the Electronic Locking Differential On and Off** (page 268). It also automatically engages based on certain selected drive modes. See **Selecting a Drive Mode** (page 343). The electronic locking differential is for use in mud, rocks, sand, or any off-road condition where you need maximum traction. It is not for use on dry pavement.

Note: *The electronic locking differentials are for off-road use only and not for use on dry pavement. Using the electronic locking differentials on dry pavement results in increased tire wear, noise and vibration or driveline damage.*

Note: *The front electronic locking differential is only available in four-wheel drive low (4L).*

Note: *Locking the front differential reduces your ability to make tight turning maneuvers and creates additional resistance to steering inputs.*

Ranger (TRA, TRB) Vehicles Built From: 01-11-2024, CG4010en enGBR, Edition date: 202407, DOM

Note: *Switching the electronic locking differentials off while turning results in disengagement difficulties. If the electronic locking differential has difficulty disengaging, release the accelerator pedal and turn the steering wheel back and forth in small increments while maintaining control and following a straight line.*

SWITCHING THE ELECTRONIC LOCKING DIFFERENTIAL ON AND OFF - EXCLUDING: RAPTOR

Activating the Electronic Locking Differential

You can activate the rear electronic locking differential by pressing the switch on the center stack or through the touchscreen display. See **Off-Road Screen** (page 444).

Note: *Do not perform this operation when cruise control or trail control is selected and active. The system may not engage or disengage as expected.*

Rear Electronic Locking Differential Engagement Speed and Availability

Drive Modes (Four-Wheel Drive Modes)	Maximum Engagement Speed	Automatic Disengagement Speed	Automatic Re-Engagement Speed
Normal (2H,4A, 4H)	32 km/h (20 mph)	41 km/h (25 mph)	32 km/h (20 mph)
Eco (2H, 4A, 4H)	32 km/h (20 mph)	41 km/h (25 mph)	32 km/h (20 mph)
Tow/Haul (2H, 4A, 4H)	32 km/h (20 mph)	41 km/h (25 mph)	32 km/h (20 mph)
Slippery (2H, 4A, 4H)	32 km/h (20 mph)	41 km/h (25 mph)	32 km/h (20 mph)
Sand (4H)[1]	No Speed Limit	No Speed Limit	No Speed Limit
Mud/Ruts (4H)[1]			

[1] Automatically engages when you select these drive modes. You have the ability to manually override the automatic engagement by pressing the electronic locking differential switch.

Four-Wheel Drive Modes	Maximum Engagement Speed	Automatic Disengagement Speed	Automatic Re-Engagement Speed
4L	No Speed Limit	No Speed Limit	No Speed Limit

SWITCHING THE ELECTRONIC LOCKING DIFFERENTIAL ON AND OFF - RAPTOR

Activating the Electronic Locking Differential

You can activate the front or rear locking differential by pressing the switch on the center stack or through the touchscreen display. See **Off-Road Screen** (page 444).

Note: *Do not perform this operation when cruise control or trail control is selected and active. The system may not engage or disengage as expected.*

Front Electronic Locking Differential Engagement Speed and Availability

Four-Wheel Drive Mode	Maximum Engagement Speed	Automatic Disengagement Speed	Automatic Re-Engagement Speed
4L	32 km/h (20 mph)	41 km/h (25 mph)	32 km/h (20 mph)

Rear Electronic Locking Differential Engagement Speed and Availability

Drive Modes (Four-Wheel Drive Modes)	Maximum Engagement Speed	Automatic Disengagement Speed	Automatic Re-Engagement Speed
Normal (2H,4A, 4H)	32 km/h (20 mph)	41 km/h (25 mph)	32 km/h (20 mph)
Sport (2H, 4A, 4H)	32 km/h (20 mph)	41 km/h (25 mph)	32 km/h (20 mph)
Slippery (4A, 4H)	32 km/h (20 mph)	41 km/h (25 mph)	32 km/h (20 mph)
Mud/Ruts (4H)[1]	No Speed Limit	No Speed Limit	No Speed Limit
Sand (4H)[1]			
Baja (2H, 4H)			
Rock Crawl (4L)[1]			

[1] Automatically engages when you select these drive modes. You have the ability to manually override the automatic engagement by pressing the electronic locking differential switch.

Four-Wheel Drive Modes	Maximum Engagement Speed	Automatic Disengagement Speed	Automatic Re-Engagement Speed
4L	No Speed Limit	No Speed Limit	No Speed Limit

ELECTRONIC LOCKING DIFFERENTIAL INDICATORS - EXCLUDING: RAPTOR

Rear electronic locking differential indicator.

If the rear electronic locking differential indicator in the instrument cluster is amber, both wheels of the indicated axle are locked together providing additional traction.

If the rear electronic locking differential is selected and the indicator in the instrument cluster is gray or turns from amber to gray while driving, one of the following has occurred:

- Your vehicle speed is too high.
- The accelerator pedal is too high during an engagement attempt.
- Your vehicle is experiencing an anti-lock brake activation.
- The left and right wheel speed difference is too high during an engagement attempt.

If the rear electronic locking differential is selected and the indicator in the instrument cluster does not illuminate, one of the following has occurred:

- The rear electronic locking differential is not allowed in the current drive mode and is accompanied by SELECTED LOCKING DIFFERENTIAL NOT AVAILABLE IN CURRENT DRIVE MODE in the instrument cluster display.
- The rear electronic locking differential is not allowed in the current 4x4 mode and is accompanied by SELECTED LOCKING DIFFERENTIAL NOT AVAILABLE IN CURRENT 4x4 MODE in the instrument cluster display.
- The system has malfunctioned and is accompanied by CHECK LOCKING DIFFERENTIAL in the instrument cluster display. See your authorized dealer for assistance.
- The rear electronic locking differential was selected above allowable vehicle speed and is accompanied by TO ENGAGE LOCKING DIFFERENTIAL SLOW TO XX MPH/KM/H in the instrument cluster display.

ELECTRONIC LOCKING DIFFERENTIAL INDICATORS - RAPTOR

Rear locking differential indicator.

Front locking differential indicator.

If the front or rear locking differential indicator in the instrument cluster is amber, both wheels of the indicated axle are locked together providing additional traction.

If the electronic locking differential is selected and the indicator in the instrument cluster is gray or turns from amber to gray while driving, one of the following has occurred:

- Your vehicle speed is too high.
- The accelerator pedal is too high during an engagement attempt.
- Your vehicle is experiencing an anti-lock brake activation.
- The left and right wheel speed difference is too high during an engagement attempt.

If the electronic locking differential is selected and the indicator in the instrument cluster does not illuminate, one of the following has occurred:

- The electronic locking differential is not allowed in the current drive mode and is accompanied by SELECTED LOCKING DIFFERENTIAL NOT AVAILABLE IN CURRENT DRIVE MODE in the instrument cluster.
- The electronic locking differential is not allowed in the current 4x4 mode and is accompanied by SELECTED LOCKING DIFFERENTIAL NOT AVAILABLE IN CURRENT 4x4 MODE in the instrument cluster.
- The system has malfunctioned and is accompanied by CHECK LOCKING DIFFERENTIAL in the instrument cluster. See your authorized dealer for assistance.

ELECTRONIC LOCKING DIFFERENTIAL – TROUBLESHOOTING

ELECTRONIC LOCKING DIFFERENTIAL – INFORMATION MESSAGES - EXCLUDING: RAPTOR

Message	Details
Selected locking differential not available in current drive mode	The selected electronic locking differential is not available in the current drive mode. See **Selecting a Drive Mode** (page 339).
Selected locking differential not available in current 4x4 mode	The selected electronic locking differential is not available in the current four-wheel drive mode. See **Switching the Electronic Locking Differential On and Off** (page 268).
To engage locking differential release accelerator pedal	The selected electronic locking differential requires that you release the accelerator pedal in order to engage.
Check Locking Differential	An electronic locking differential system fault is present. See your authorized dealer as soon as possible.
To Engage Locking Differential Slow to XX mph/km/h	Slow the vehicle to the displayed speed to allow the electronic locking differential to engage.

The following conditions affect the electronic locking differential:

- Based on the drive mode selected, the rear electronic locking differential does not engage if your vehicle speed is above 32 km/h (20 mph).
- Based on the drive mode selected, the electronic locking differential automatically disengages at speeds above 41 km/h (25 mph) and automatically re-engages at speeds below 32 km/h (20 mph).
- The electronic locking differential may not engage if you press the accelerator pedal during an engagement attempt. A message may display in the instrument cluster instructing you to release the accelerator pedal.
- The AdvanceTrac system has the ability to take control of the electronic locking differential and disable it during driving maneuvers when necessary.

Operating Electronic Locking Differential With a Spare or Mismatched Tires

On vehicles with an electronic locking differential, the size of the spare tire can affect system performance. If there is a significant difference between the two rear tires or two front tires, you may have limited electronic locking differential functionality. If the electronic locking differential has difficulty disengaging, release the accelerator pedal and turn the steering wheel in the opposite direction when rolling. We recommend engaging and disengaging the electronic locking differential at a stop when you mount a spare or mismatched tire on either axle.

ELECTRONIC LOCKING DIFFERENTIAL – INFORMATION MESSAGES - RAPTOR

Message	Details
Selected locking differential not available in current drive mode	The selected electronic locking differential is not available in current drive mode. See **Selecting a Drive Mode** (page 343).
Selected locking differential not available in current 4x4 mode	The selected electronic locking differential is not available in your current four-wheel drive mode. See **Switching the Electronic Locking Differential On and Off** (page 269).
To engage locking differential release accelerator pedal	The selected electronic locking differential requires that you release the accelerator pedal in order to engage.
Check Locking Differential	An electronic locking differential system fault is present. See your authorized dealer as soon as possible.

The following conditions affect the electronic locking differential:

- Based on drive mode selection, the rear electronic locking differential does not engage if your vehicle speed is above 32 km/h (20 mph).
- The front electronic locking differential does not engage if your vehicle speed is above 32 km/h (20 mph) in four-wheel drive low (4L).
- Based on drive mode selection, the electronic locking differential automatically disengages at speeds above 41 km/h (25 mph) and automatically re-engages at speeds below 32 km/h (20 mph).
- The electronic locking differential may not engage if you press your accelerator pedal during an engagement attempt. A message may display in the instrument display guiding you to release the accelerator pedal.
- In four-wheel drive low (4L), the front electronic locking differential automatically disengages at speeds above 41 km/h (25 mph) and automatically re-engages at speeds below 32 km/h (20 mph).
- The AdvanceTrac system has the ability to take over control of the electronic locking differential and disable it during driving maneuvers when necessary.

Operating Electronic Locking Differential With a Spare or Mismatched Tires

On vehicles with an electronic locking differential, the size of the spare tire can affect system performance. If there is a significant difference between the two rear tires or two front tires, you may have limited electronic locking differential functionality. If the electronic locking differential has difficulty disengaging, release the accelerator pedal and turn the steering wheel in the opposite direction when rolling. We recommend engaging and disengaging the electronic locking differential at a stop when you mount a spare or mismatched tire on either axle.

Ranger (TRA, TRB) Vehicles Built From: 01-11-2024, CG4010en enGBR, Edition date: 202407, DOM

BRAKE PRECAUTIONS

Wet brakes result in reduced braking efficiency. Gently press the brake pedal a few times when leaving a car wash or driving from standing water to dry the brakes.

Note: *Depending on applicable laws and regulations in the country for which your vehicle was originally built, your brake lamps may flash during heavy braking. Following this, your hazard lights may also flash when your vehicle comes to a stop.*

ANTI-LOCK BRAKING SYSTEM

ANTI-LOCK BRAKING SYSTEM LIMITATIONS

The anti-lock braking system does not eliminate the risk of crash when:

- You drive too closely to the vehicle in front of you.
- Your vehicle is hydroplaning.
- You take corners too fast.
- The road surface is poor.

Note: *If the system activates, the brake pedal could pulse and travel further. Maintain pressure on the brake pedal.*

ANTI-LOCK BRAKING SYSTEM INDICATORS

This system helps you maintain steering control during emergency stops by keeping the brakes from locking.

If the warning lamp illuminates when you are driving, this indicates a malfunction. Your vehicle continues to have normal braking without the anti-lock brake system function. Have your vehicle checked as soon as possible.

The warning lamp also momentarily illuminates when you switch the ignition on to confirm the lamp is functional. If it does not illuminate when you switch the ignition on, or begins to flash at any time, have the system checked by an authorized dealer.

BRAKE OVER ACCELERATOR

In the event the accelerator pedal becomes stuck or entrapped, apply steady and firm pressure to the brake pedal to slow the vehicle and reduce engine power. If you experience this condition, apply the brakes and bring your vehicle to a safe stop. Move the transmission to park (P), switch the engine off and apply the parking brake. Inspect the accelerator pedal for any interference. If none are found and the condition persists, have your vehicle towed to the nearest authorized dealer.

LOCATING THE BRAKE FLUID RESERVOIR

See **Under Hood Overview** (page 481).

CHECKING THE BRAKE FLUID

WARNING: Do not use any fluid other than the recommended brake fluid as this will reduce brake efficiency. Use of incorrect fluid could result in the loss of vehicle control, serious personal injury or death.

WARNING: Only use brake fluid from a sealed container. Contamination with dirt, water, petroleum products or other materials may result in brake system damage or failure. Failure to adhere to this warning could result in the loss of vehicle control, serious personal injury or death.

WARNING: Do not allow the fluid to touch your skin or eyes. If this happens, rinse the affected areas immediately with plenty of water and contact your physician.

WARNING: The brake system could be affected if the brake fluid level is below the ***MIN*** mark or above the ***MAX*** mark on the brake fluid reservoir.

1. Park your vehicle on a level surface.

2. Look at the brake fluid reservoir to see where the brake fluid level is relative to the **MIN** and the **MAX** marks on the reservoir.

Note: *To avoid fluid contamination, the reservoir cap must remain in place and fully tight, unless you are adding fluid.*

Only use fluid that meets our specifications. See **Brake Fluid Specification** (page 275).

BRAKE FLUID SPECIFICATION

See **Brake Fluid Specification** (page 582).

BRAKES – TROUBLESHOOTING

BRAKES – WARNING LAMPS

WARNING: Driving your vehicle with the warning lamp on is dangerous. A significant decrease in braking performance may occur. It may take you longer to stop your vehicle. Have your vehicle checked as soon as possible. Driving extended distances with the parking brake engaged can cause brake failure and the risk of personal injury.

If the ABS indicator illuminates when you are driving, this indicates a malfunction. Your vehicle continues to have normal braking without the anti-lock braking system function. See an authorized dealer.

It also momentarily illuminates when you switch the ignition on to confirm the lamp is functional. If it does not illuminate when you switch the ignition on, or begins to flash at any time, have the system checked by an authorized dealer.

Ranger (TRA, TRB) Vehicles Built From: 01-11-2024, CG4010en enGBR, Edition date: 202407, DOM

BRAKE

The brake indicator momentarily illuminates when you switch the ignition on to confirm the lamp is functional. It may also illuminate when you apply the parking brake and the ignition is on. If it illuminates when your vehicle is moving, make sure the parking brake is disengaged. If the parking brake is disengaged, this indicates low brake fluid level or a brake system fault. See an authorized dealer.

Note: *Lamps may vary depending on region.*

BRAKES – INFORMATION MESSAGES

Message	Details
Brake fluid level low	The brake fluid level is low, check the brake system immediately. See **Checking the Brake Fluid** (page 274).
Check brake system	Have the system checked as soon as possible.

BRAKES – FREQUENTLY ASKED QUESTIONS

Is it normal for my brakes to make noise?

Occasional brake noise is normal. If a metal-to-metal, continuous grinding, or squeal sound is present, the brake lining could be worn. Have the system checked.

There is an electrical motor sound when I press on the brake pedal or activate the park brake switch. Is this normal?

Yes, those sounds are the electronic brake booster or the electronic park brake operating.

Note: *Brake dust could accumulate on the wheels, even under normal driving conditions. Some dust is normal as the brakes wear and does not contribute to brake noise. See* ***Cleaning Wheels*** *(page 509).*

Ranger (TRA, TRB) Vehicles Built From: 01-11-2024, CG4010en enGBR, Edition date: 202407, DOM

APPLYING THE PARKING BRAKE - MANUAL TRANSMISSION

WARNING: Always fully apply the parking brake. Failure to follow this instruction could result in personal injury or death.

1. Firmly press the brake pedal.
2. Pull the parking lever upward to its fullest extent.

Note: *Do not press the release button while pulling the parking brake lever upward.*

Note: *If you park your vehicle on a hill and facing uphill, select first gear and turn the steering wheel away from the curb.*

Note: *If you park your vehicle on a hill and facing downhill, select reverse gear and turn the steering wheel toward the curb.*

APPLYING THE PARKING BRAKE - AUTOMATIC TRANSMISSION

WARNING: Always fully apply the parking brake and make sure you shift into park (P). Failure to follow this instruction could result in personal injury or death.

1. Firmly press the brake pedal.
2. Pull the parking lever upward to its fullest extent.

Note: *Do not press the release button while pulling the parking brake lever upward.*

Note: *If you park your vehicle on a hill and facing uphill, shift into park (P) and turn the steering wheel away from the curb.*

Note: *If you park your vehicle on a hill and facing downhill, shift into park (P) and turn the steering wheel toward the curb.*

RELEASING THE PARKING BRAKE

1. Firmly press the brake pedal.
2. Pull the parking brake lever upward to its fullest extent.
3. Press the release button and push the parking brake lever downward.

PARKING BRAKE AUDIBLE WARNING

Sounds when the parking brake is on and your vehicle is moving.

If the warning tone continues after you have released the parking brake, this indicates a malfunction. Have your vehicle checked as soon as possible.

PARKING BRAKE – TROUBLESHOOTING

PARKING BRAKE – WARNING LAMPS

WARNING: If you drive extended distances with the parking brake applied, you could cause damage to the brake system.

It illuminates when you engage the parking brake and the ignition is on.

Ranger (TRA, TRB) Vehicles Built From: 01-11-2024, CG4010en enGBR, Edition date: 202407, DOM

If it illuminates when your vehicle is moving, make sure the parking brake is disengaged. If the parking brake is disengaged, this indicates low brake fluid level or a brake system fault. Have your vehicle checked as soon as possible.

PARKING BRAKE – INFORMATION MESSAGES

Message	Description
Park brake applied	You have not released the parking brake and your vehicle reaches 5 km/h (3 mph). If the message continues to appear after you have released the parking brake, have your vehicle checked as soon as possible.

WHAT IS THE ELECTRIC PARKING BRAKE

The electric parking brake is used to hold your vehicle on slopes and flat roads.

APPLYING THE ELECTRIC PARKING BRAKE - MANUAL TRANSMISSION

WARNING: Apply the parking brake, shift into first gear, switch the ignition off and remove the keys or remote control before you leave your vehicle. Failure to follow this instruction could result in personal injury or death.

WARNING: If you drive extended distances with the parking brake applied, you could cause damage to the brake system.

WARNING: The electric parking brake does not operate if the vehicle battery has run out of charge.

WARNING: If the parking brake is fully released, but the brake warning lamp remains illuminated, the brakes may not be working properly. Have your vehicle checked as soon as possible.

The switch is on the center console.

1. Pull the switch up.

The red warning lamp flashes during operation and illuminates when the parking brake is applied.

Note: *You can apply the electric parking brake when the ignition is off.*

Note: *If you park your vehicle on a hill and facing uphill, select first gear and turn the steering wheel away from the curb.*

Note: *If you park your vehicle on a hill and facing downhill, select reverse gear and turn the steering wheel toward the curb.*

APPLYING THE ELECTRIC PARKING BRAKE - AUTOMATIC TRANSMISSION

WARNING: Apply the parking brake and make sure your vehicle is in park (P). Power the vehicle off and remove the keys or remote control whenever you leave your vehicle. Failure to follow this instruction could result in personal injury or death.

WARNING: If you drive extended distances with the parking brake applied, you could cause damage to the brake system.

WARNING: The electric parking brake does not operate if the vehicle battery has run out of charge.

WARNING: If the parking brake is fully released, but the brake warning lamp remains illuminated, the brakes may not be working properly. Have your vehicle checked as soon as possible.

The electric parking brake switch is on the center console.

1. Pull the switch up.

The red warning lamp flashes during operation and illuminates when the parking brake is applied.

Note: *You can apply the electric parking brake when the ignition is off.*

Ranger (TRA, TRB) Vehicles Built From: 01-11-2024, CG4010en enGBR, Edition date: 202407, DOM

Note: *The electric parking brake could apply when you shift into park (P). See* ***Park (P)*** *(page 251).*

APPLYING THE ELECTRIC PARKING BRAKE IN AN EMERGENCY

You can use the electric parking brake to slow or stop your vehicle in an emergency.

Pull the switch up and hold it.

The red warning lamp illuminates, a tone sounds and the stoplamps turn on when you use the electric parking brake in an emergency.

The electric parking brake continues to slow your vehicle down unless you release the switch.

Note: *Do not apply the electric parking brake when your vehicle is moving, except in an emergency. If you repeatedly use the electric parking brake to slow or stop your vehicle, you could cause damage to the brake system.*

MANUALLY RELEASING THE ELECTRIC PARKING BRAKE

1. Switch the ignition on.
2. Press and hold the brake pedal.
3. Push the switch down.

The red warning lamp turns off.

Pulling Away When Towing a Trailer Uphill

1. Press and hold the brake pedal.
2. Pull the switch upward and hold it.
3. Shift into gear.
4. Press the accelerator pedal until engine has developed sufficient torque to prevent your vehicle from rolling down the hill.
5. Release the switch and pull away in a normal manner.

AUTOMATICALLY RELEASING THE ELECTRIC PARKING BRAKE

1. Close the driver door.
2. Shift into gear.
3. Press the accelerator pedal and pull away in a normal manner.

ELECTRIC PARKING BRAKE AUDIBLE WARNING

Sounds when the parking brake is on and your vehicle is moving. If the warning tone continues after you have released the parking brake, this indicates a malfunction. Have your vehicle checked as soon as possible.

RELEASING THE ELECTRIC PARKING BRAKE IF THE VEHICLE BATTERY HAS RUN OUT OF CHARGE

WARNING: The electric parking brake does not operate if the vehicle battery has run out of charge.

Connect a booster battery to the vehicle battery to release the electric parking brake if the vehicle battery has run out of charge. See **Jump Starting the Vehicle** (page 452).

ELECTRIC PARKING BRAKE – TROUBLESHOOTING

ELECTRIC PARKING BRAKE – WARNING LAMPS

Brake System

It illuminates red when you apply the parking brake and your vehicle is on. If the lamp flashes when the parking brake has been released, this indicates the parking brake system requires service. Have your vehicle checked as soon as possible.

Note: *Lamps may vary depending on region.*

Electric Parking Brake

When the lamp illuminates yellow, it indicates a malfunction in the electric parking brake. Have your vehicle checked as soon as possible.

Note: *Lamps may vary depending on region.*

ELECTRIC PARKING BRAKE – INFORMATION MESSAGES

Parking Brake

Message	Details
Park brake on	The electric parking brake is fully applied.
Park brake off	The electric parking brake is fully released.
Park brake System overheated	The electric parking brake system has detected a condition where components may have been subject to overheating. Contact an authorized dealer.
Park brake Press brake and switch to release	The electric parking brake is set and you attempted a manual release without pressing the brake.
Park brake Use switch to release	With the electric parking brake set, you attempted an automatic release with no success. Perform a manual release.
Release park brake	The electric parking brake is set and your vehicle speed exceeds 5 km/h (3 mph). Release the parking brake before continued driving.
Park brake not applied	The electric parking brake is not fully applied.
Park Brake not released	The electric parking brake is not fully released.
Park brake Maintenance mode	The electric parking brake system has been put into a special mode to allow rear brake service. Contact an authorized dealer.
Park brake Limited function Service required	The electric parking brake system has detected a condition that requires service. Some functionality may still be available. Contact an authorized dealer.
Park brake malfunction Service now	The electric parking brake system has detected a condition that requires service. Contact an authorized dealer.

ELECTRIC PARKING BRAKE – FREQUENTLY ASKED QUESTIONS

Pulling Away on a Hill When Towing a Trailer

Press and hold the brake pedal.

Pull the switch upward and hold it.

Shift into gear.

Press the accelerator pedal until engine has developed sufficient torque to prevent your vehicle from rolling down the hill.

Release the switch and pull away in a normal manner.

WHAT IS REVERSE BRAKE ASSIST

Reverse brake assist is designed to reduce impact damage or assist in avoiding a collision while in reverse (R).

HOW DOES REVERSE BRAKE ASSIST WORK

Reverse brake assist functions when in reverse (R) and traveling at a speed of 2–12 km/h (1–7 mph).

If the system detects an obstacle behind your vehicle, it provides a warning through the rear parking aid or cross traffic alert system. Using sensors on the rear of the vehicle, it can detect a possible collision and apply the brakes. If full braking occurs, the system attempts to stop the vehicle a safe distance from the obstacle.

REVERSE BRAKE ASSIST PRECAUTIONS

WARNING: You are responsible for controlling your vehicle at all times. The system is designed to be an aid and does not relieve you of your responsibility to drive with due care and attention. Failure to follow this instruction could result in the loss of control of your vehicle, personal injury or death.

WARNING: To help avoid personal injury, always use caution when in reverse (R) and when using the sensing system.

WARNING: The system may not operate properly during severe weather conditions, for example snow, ice, heavy rain and spray. Always drive with due care and attention. Failure to take care may result in a crash.

WARNING: Traffic control systems, fluorescent lamps, inclement weather, air brakes, external motors and fans may affect the correct operation of the sensing system. This may cause reduced performance or false alerts.

WARNING: Some situations and objects prevent hazard detection. For example low or direct sunlight, inclement weather, unconventional vehicle types, and pedestrians. Apply the brakes when necessary. Failure to follow this instruction could result in the loss of control of your vehicle, personal injury or death.

WARNING: Do not use the system with accessories that extend beyond the front or rear of your vehicle, for example a trailer hitch or bike rack. The system is not able to make corrections for the additional length of the accessories.

The system only applies the brakes for a short period of time when an event occurs. Act as soon as you notice the brakes apply to remain in control of the vehicle. If you do not intervene the vehicle may start to move again.

Note: *Certain add-on devices around the bumper or fascia may create false alerts. For example, large trailer hitches, bicycle or surfboard racks, license plate brackets, bumper covers or any other device that may block the normal detection zone of the system. Remove the add-on device to prevent false alerts.*

Note: *The system does not react to small or moving objects, particularly those close to the ground.*

Note: *The system does not operate during hard acceleration or steering.*

Note: *If your vehicle sustains damage to the bumper or fascia leaving it misaligned or bent, it could alter the sensing zone causing inaccurate measurement of obstacles or false alerts.*

Note: *Vehicle loading and suspension changes can impact the angle of the sensors and may change the normal detection zone of the system resulting in inaccurate measurement of obstacles or false alerts.*

Note: *When you connect a trailer, the system may detect the trailer and provide an alert, or the system turns off. If the system does not turn off, manually switch the system off after you connect the trailer.*

Note: *You may experience reduced system performance on road surfaces that limit deceleration. For example, roads with ice, loose gravel, mud or sand.*

SWITCHING REVERSE BRAKE ASSIST ON AND OFF

1. From the driver assistance menu, press Reverse Brake Assist. See **Center Display Overview** (page 599).
2. Switch the feature on or off.

Note: *The system is unavailable when the rear parking aid or cross traffic alert is off.*

Note: *If your vehicle is not equipped with cross traffic alert, the reverse brake assist relies on input from only the rear parking aid and rear camera sensors.*

OVERRIDING REVERSE BRAKE ASSIST

There could be instances when unexpected or unwanted braking occurs. Firmly pressing the accelerator pedal or switching the feature off overrides the system.

REVERSE BRAKE ASSIST INDICATORS

If the system determines that a collision with an obstacle may occur, full braking may apply.

A message and warning indicator appear when the system applies the brakes.

REVERSE BRAKE ASSIST – TROUBLESHOOTING

REVERSE BRAKE ASSIST – INFORMATION MESSAGES

Message	Description
Reverse Brake Assist	Displays for a few seconds when the system applies the brakes.
Reverse Brake Assist not available See manual	Displays when a related system or feature error occurs. Make sure the exterior cameras are clean and not obstructed. Drive the vehicle on a straight road for a short period. If the message remains, have the system checked as soon as possible.
Reverse Brake Assist malfunction	Displays when a system error has occurred. Have your vehicle checked as soon as possible.
Reverse Brake Assist off	Displays when reverse brake assist is off.

REVERSE BRAKE ASSIST – FREQUENTLY ASKED QUESTIONS

Why is reverse brake assist unavailable?

- Make sure you switch the system on. See **Switching Reverse Brake Assist On and Off** (page 285).
- Make sure that the liftgate or tailgate, hood and all doors are closed.
- Make sure the cross traffic alert system is on. See **What Is Cross Traffic Alert** (page 373).
- Make sure the rear parking aid system is on.
- Make sure that traction control is on. See **Switching Traction Control On and Off** (page 291).
- Your vehicle may have sustained a rear end impact. Have the sensors checked for proper coverage and operation.
- Make sure the exterior cameras are not dirty or obstructed. If dirty, clean the cameras. If the reverse brake assist unavailable message still appears after cleaning the cameras, wait a short time for the message to clear. If the message does not clear, drive the vehicle on a straight road for a short period. If the message remains, have the system checked.
- Make sure the sensors are not blocked or faulted. See **Locating the Rear Parking Aid Sensors** (page 308). See **Locating the Cross Traffic Alert Sensors** (page 374).
- You recently had your vehicle serviced, or the battery disconnected. Drive your vehicle a short distance to resume system operation.
- The system does not function when you connect a trailer. Operation resumes when you disconnect the trailer.

Note: *If you are still having problems with reverse brake assist, have the system checked as soon as possible.*

Ranger (TRA, TRB) Vehicles Built From: 01-11-2024, CG4010en enGBR, Edition date: 202407, DOM

WHAT IS HILL START ASSIST

Hill Start Assist applies the brakes to hold your vehicle after you bring it to a stop on a slope. This makes it easier for you to pull away without using the parking brake.

HOW DOES HILL START ASSIST WORK

When the system activates, your vehicle remains stationary for a few seconds after you release the brake pedal. This gives you time to move your foot from the brake pedal to the accelerator pedal. The brakes release when you apply the accelerator pedal and the vehicle begins to move forward, or the vehicle is stationary beyond the Hill Start Assist hold time.

The system activates when your vehicle is in any forward gear and facing uphill, or when your vehicle is in reverse (R) and facing downhill.

HILL START ASSIST PRECAUTIONS

WARNING: The system does not replace the parking brake. When you leave your vehicle, always apply the parking brake.

WARNING: You must remain in your vehicle when the system turns on. At all times you are responsible for controlling your vehicle, supervising the system, and intervening if required. Failure to follow this instruction could result in the loss of control of your vehicle, personal injury or death.

WARNING: The system turns off if there is a malfunction.

SWITCHING HILL START ASSIST ON AND OFF - AUTOMATIC TRANSMISSION

Hill start assist is active when you switch the ignition on. You cannot switch the system on or off.

SWITCHING HILL START ASSIST ON AND OFF - MANUAL TRANSMISSION

You can switch hill start assist on and off on the touchscreen:

1. From the settings menu, press Driver Assistance. See **Center Display** (page 599).
2. Switch Hill Start Assist on or off.

Note: *The system remembers the last setting when you start your vehicle.*

HILL START ASSIST – TROUBLESHOOTING

HILL START ASSIST – INFORMATION MESSAGES

Message	Details
Hill start assist not available	Displays when system is not available. Have your vehicle checked as soon as possible.

Ranger (TRA, TRB) Vehicles Built From: 01-11-2024, CG4010en enGBR, Edition date: 202407, DOM

HOW DOES AUTO HOLD WORK

Auto hold applies the brakes to hold your vehicle after you bring the vehicle to a stop. This can help when waiting on a hill or in traffic.

SWITCHING AUTO HOLD ON AND OFF

WARNING: The system does not replace the parking brake. When you leave your vehicle, always apply the parking brake.

WARNING: You must remain in your vehicle when the system turns on. At all times you are responsible for controlling your vehicle, supervising the system, and intervening if required. Failure to follow this instruction could result in the loss of control of your vehicle, personal injury or death.

You can switch the system on or off by accessing the menu on the touchscreen.

1. From the settings menu, press Driver Assistance. See **Center Display** (page 599).

Note: *If your vehicle has mechanical shift, you can only switch the system on after you close the driver door and fasten your seatbelt.*

Note: *If your vehicle has electronic shift, you can only switch the system on after you close the driver door.*

Note: *The system remembers the last setting when you start your vehicle.*

Note: *When using an automatic car wash, switch auto hold off or shift into neutral (N) with the brake pedal applied to make sure auto hold is not active.*

USING AUTO HOLD

1. Bring your vehicle to a complete stop. The auto hold active indicator illuminates in the instrument cluster display.
2. Release the brake pedal. The system holds your vehicle at a standstill. The auto hold active indicator remains illuminated in the instrument cluster display.
3. Apply the accelerator and drive off in a normal manner. The system releases the brakes and the auto hold active indicator switches off.

Note: *The system only activates if you apply enough pressure to the brake pedal to bring the vehicle to a standstill.*

Note: *Under certain conditions, the system could apply the electric parking brake. The brake system warning lamp illuminates. The electric parking brake releases when you press the accelerator pedal. See* ***Automatically Releasing the Electric Parking Brake*** *(page 281).*

Note: *The system switches off if you shift into reverse (R) or neutral (N) while pressing the brake pedal.*

There could be actions that can cause the auto hold system not to work when the following occur:

- Your vehicle is in temporary neutral mode.
- The driver door is open.
- You shift into reverse (R) or neutral (N) before the system is active.

AUTO HOLD INDICATORS

Illuminates when the system is active.

Ranger (TRA, TRB) Vehicles Built From: 01-11-2024, CG4010en enGBR, Edition date: 202407, DOM

Illuminates when the system is on but cannot hold your vehicle at a standstill at this particular time.

WHAT IS TRACTION CONTROL

The traction control system helps to avoid drive wheel spin and loss of traction.

HOW DOES TRACTION CONTROL WORK

If your wheels begin to spin, the loss of traction can compromise steering control and stability of the vehicle. The traction control system applies the brakes to individual wheels and when needed, reduces engine power at the same time to increase traction.

SWITCHING TRACTION CONTROL ON AND OFF

WARNING: Operating your vehicle with the traction control disabled could lead to an increased risk of loss of vehicle control, vehicle rollover, personal injury and death.

The system turns on each time you switch the ignition on.

If your vehicle is stuck in mud or snow, switching traction control off may be beneficial as this allows the wheels to spin.

Switching the System Off

The switch for the stability and traction control system is on the center console.

When you switch the system off, a message and an illuminated icon appear in the instrument cluster display.

Use the switch again to return the traction control system to normal operation.

Note: *When you switch traction control off, stability control remains fully active.*

Note: *When you place your vehicle into four-wheel drive low (4L), the traction control disables. Traction control resumes when you put your vehicle back into two-wheel drive or four-wheel drive high (4H).*

Note: *For additional information on the traction and stability control systems.* *See **Stability Control** (page 293).*

TRACTION CONTROL INDICATOR

Stability and Traction Control Indicator

If the indicator does not illuminate when you switch the ignition on, or remains on when the engine is running, this indicates a malfunction. Have your vehicle checked by an authorized dealer as soon as possible.

The traction control off indicator illuminates when you switch the traction control system off, or when an alternative stability control mode is selected that requires the traction control off depending on the drive mode selected.

Ranger (TRA, TRB) Vehicles Built From: 01-11-2024, CG4010en enGBR, Edition date: 202407, DOM

TRACTION CONTROL – TROUBLESHOOTING

TRACTION CONTROL – WARNING LAMPS

System Messages

The traction control light temporarily illuminates on start-up and flashes when activated by a driving condition. The light stays on if a problem occurs in the system.

The traction control off light temporarily illuminates on start-up and stays on:

- When you switch the traction control system off.
- When you select an alternative stability control mode.

TRACTION CONTROL – INFORMATION MESSAGES

Message	Details
Traction Control Off	The status of the traction control system after you switched it off.
Traction Control On	The status of the traction control system after you switched it on.

Ranger (TRA, TRB) Vehicles Built From: 01-11-2024, CG4010en enGBR, Edition date: 202407, DOM

HOW DOES STABILITY CONTROL WORK

WARNING: Vehicle modifications involving braking system, aftermarket roof racks, suspension, steering system, tire construction and wheel and tire size may change the handling characteristics of your vehicle and may adversely affect the performance of the electronic stability control system. In addition, installing any stereo speakers may interfere with and adversely affect the electronic stability control system. Reducing the effectiveness of the electronic stability control system could lead to an increased risk of loss of vehicle control, vehicle rollover, personal injury and death.

WARNING: Remember that even advanced technology cannot defy the laws of physics. It's always possible to lose control of a vehicle due to inappropriate driver input for the conditions. Aggressive driving on any road condition can cause you to lose control of your vehicle increasing the risk of personal injury or property damage. Activation of the electronic stability control system is an indication that at least some of the tires have exceeded their ability to grip the road; this could reduce the operator's ability to control the vehicle potentially resulting in a loss of vehicle control, vehicle rollover, personal injury and death.

WARNING: You are responsible for controlling your vehicle at all times. The system is designed to be an aid and does not relieve you of your responsibility to drive with due care and attention. Failure to follow this instruction could result in the loss of control of your vehicle, personal injury or death.

If a driving condition activates either the stability control or the traction control system you may experience the following conditions:

- The stability and traction control light flashes.
- Your vehicle slows down.
- Reduced engine power.

The stability control system has several features built into it to help you maintain control of your vehicle.

Electronic Stability Control

Electronic stability control enhances your vehicle's ability to prevent skids or lateral slides by applying the brakes individually to one or more of the wheels and if necessary, reducing engine power.

Roll Stability Control

Roll stability control enhances your vehicle's ability to prevent rollovers by detecting your vehicle's roll motion and the rate at which it changes by applying the brakes individually to one or more wheels.

Traction Control

Traction control enhances your vehicle's ability to maintain traction of the wheels by detecting and controlling wheel spin. See **How Does Traction Control Work** (page 291).

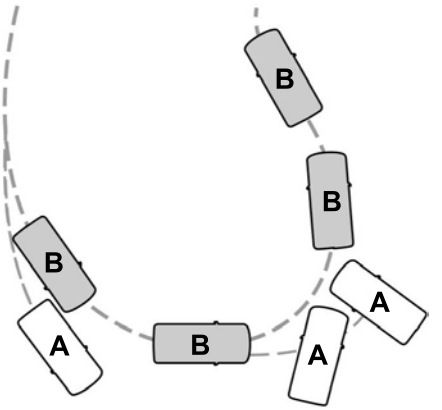

A Vehicle without stability control skidding off its intended route.

B Vehicle with stability control maintaining control on a slippery surface.

SWITCHING STABILITY CONTROL ON AND OFF

Stability Control turns on each time you switch the ignition on.

You can switch the stability control off by pressing and holding the stability and traction control button off for 5-15 seconds, or you can press the button again to switch the system on.

Shifting the transmission into reverse (R) will disable the system.

You can switch the traction control system off or on independently. See **Switching Traction Control On and Off** (page 291).

Stability Control and Traction Control with Roll Stability Control

	Stability Control OFF Light	Roll Stability Control[3]	Electronic Stability Control[3]	Traction Control System[3]
Default at start-up	Illuminated during bulb check	Enabled	Enabled[3]	Enabled
Button pressed momentarily	Illuminated	Enabled	Enabled[3]	Disabled[1]
Button pressed and held for 5 - 15 seconds	Illuminated	Enabled	Disabled[2]	Disabled[1]
Button not pressed and transfer case is switched to 4x4 Low or put into Rock Crawl Mode	Illuminated	Disabled	Disabled	Disabled[1]

[1] The Traction Control system can still be enabled but with tighter or looser thresholds.
[2] When you press and hold the button, a progress bar will display to show the button hold time progress.
[3] Functions can vary depending on what selectable drive mode the vehicle is currently in.

STABILITY CONTROL INDICATOR

The system turns on each time you switch the ignition on. You can switch off the traction control portion of the system independently. See **How Does Traction Control Work** (page 291).

STABILITY CONTROL – TROUBLESHOOTING

STABILITY CONTROL – INFORMATION MESSAGES

ESC Service required	Displayed when the system has detected a condition that requires service. Contact your authorized dealer as soon as possible.
ESC On/Off	The traction control has been disabled or enabled by the driver

WHAT IS TRAIL CONTROL

WARNING: The system does not control speed in low traction conditions or extremely steep slopes. The system is designed to be an aid and does not relieve you of your responsibility to drive with due care and attention. Failure to follow this instruction could result in personal injury.

WARNING: The system does not replace the parking brake. When you leave your vehicle, always apply the parking brake.

Trail control lets you focus on steering during low-speed and off-road use by controlling your vehicle's acceleration and braking to maintain the speed that you set.

You may hear a noise from the anti-lock brake system pump motor when you use the system. This is normal.

TRAIL CONTROL LIMITATIONS

Trail control is unavailable when any of the following occur:

- Your vehicle speed is greater than 32 km/h (20 mph) in two-wheel drive high (2H), four-wheel drive auto (4A) or four-wheel drive high (4H) modes.
- Your vehicle speed is greater than 15 km/h (9 mph) in four-wheel drive low (4L) mode.
- Your vehicle speed is greater than 8 km/h (5 mph) in reverse (R).
- The transmission is in park (P).
- The driver side door is open.
- Cruise control is on.
- Pro trailer backup assist is on.
- The parking brake is applied.

SWITCHING TRAIL CONTROL ON AND OFF

Press Trail Control on the touchscreen. See **Using the Off-Road Screen** (page 446).

The system switches off if you press the button again or exceed 68 km/h (42 mph).

SETTING THE TRAIL CONTROL SPEED

Note: *The buttons are located on the steering wheel.*

Drive to your preferred speed.

Press button to increase the set current speed.

Press button to decrease the set current speed.

Note: *The indicator changes color.*

You can adjust the set speed in small or large increments. Press the toggle button upward or downward once to adjust the set speed in small increments. Press and hold the toggle button upward or downward to adjust the set speed in large increments.

You can also decrease the set speed by braking.

Note: *If a set speed is set and the trail control is active and the vehicle is stopped by the brake, releasing the brake will allow the vehicle to accelerate to the set speed. Pressing the brake pedal does not switch off the system.*

CANCELING THE SET SPEED

Press the button.

TRAIL CONTROL INDICATORS

When trail control is active, the indicator illuminates green in the instrument cluster. When the system is switched on but is unavailable or in standby mode, it illuminates gray.

TRAIL CONTROL – TROUBLESHOOTING

TRAIL CONTROL – INFORMATION MESSAGES

Message	Details
Reduce speed to enter trail control	Displays when you must reduce your vehicle speed to use trail control.
Trail control not available with park brake applied	Displays when you must release the park brake to use trail control.
Trail control not available while Pro Trailer Backup Assist™ active	Displays when you must switch off the trailer backup assist to use trail control.
Trail control enabled Use SET button to set speed	Displays when you successfully enabled trail control and can set a speed with the Set+ or Set- control.
Trail control off Driver resume control	Displays when a system fault has occurred when trail control was active and the driver must resume control.
Trail control off	Displays when the system has turned off.
Trail control malfunction See manual	Displays when a system fault is present. See the trail control section in your Owner's Manual. See your authorized dealer for diagnosis.
Trail control To activate select gear	Displays when you must be in drive (D), neutral (N) or reverse (R) to use trail control.
Trail control not available with cruise control active	Displays when you must switch the cruise control off to use trail control.
Trail control not available with driver door open	Displays when you must close the driver door to use trail control.
Set trail control to 1 mph to aid in getting unstuck in sand	Displays when the system detects you may be stuck in sand and recommends using trail control on to the lowest set speed. Doing this could slowly pull sand under the tires to free the vehicle.
Set trail control to 2 km/h to aid in getting unstuck in sand	
Descent control now active Press trail control switch to exit	Due to some driver action, Trail Control propulsion was turned off but the vehicle will still brake if descending a hill. The driver must press the Trail Control switch to turn the feature OFF, they can then turn it back on.
Trail Control not available with seatbelt off	Displays when you must have the seatbelt on to use trail control.

Ranger (TRA, TRB) Vehicles Built From: 01-11-2024, CG4010en enGBR, Edition date: 202407, DOM

WHAT IS TRAIL TURN ASSIST

Trail turn assist can reduce the turning radius of your vehicle by applying the brakes to the inside rear wheel in low-speed, high steering-angle maneuvers.

TRAIL TURN ASSIST PRECAUTIONS

Note: *Do not use trail turn assist on dry, hard surfaced roads. Doing so can produce excessive noise, increase tire wear and may damage drive line, or braking components. Trail turn assist is only intended for slippery, or loose surfaces.*

You may hear noise from the anti-lock brake system while trail turn assist is active. This is normal operation.

TRAIL TURN ASSIST LIMITATIONS

Trail turn assist can only be used when the vehicle's four-wheel drive system is in the four-wheel drive high (4H), or four-wheel drive low (4L) modes.

Trail Turn Assist cannot be used when the vehicle's rear differential is locked. If the rear differential has recently been locked prior to Trail Turn Assist being turned on, Trail Turn Assist may not activate until it can confirm that the rear differential is unlocked.

SWITCHING TRAIL TURN ASSIST ON AND OFF

You can switch trail turn assist on or off from the touchscreen. See **Using the Off-Road Screen** (page 446).

Once switched on, trail turn assist activates when:

- Vehicle speed is less than 19 km/h (12 mph).
- Vehicle is in four-wheel drive high (4H) or four-wheel drive low (4L).
- Rear differential is fully unlocked.
- Steering wheel is almost fully turned to the left or right.

You can deactivate trail turn assist by performing any of the following:

- Select two-wheel drive high (2H) or four-wheel drive auto (4A).
- Switch on the rear locking differential.
- Reduce the steering wheel input.

Trail turn assist remains available, even if not active, until you switch it off in the touchscreen.

TRAIL TURN ASSIST INDICATORS

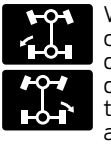

When trail turn assist is on, one of these two indicators will be displayed, depending on the direction of the vehicle's last turn. When the feature is available but not in use, the indicator will be gray. When the feature is active the indicator will be green.

Ranger (TRA, TRB) Vehicles Built From: 01-11-2024, CG4010en enGBR, Edition date: 202407, DOM

TRAIL TURN ASSIST – TROUBLESHOOTING

TRAIL TURN ASSIST – INFORMATION MESSAGES

Message	Details
Trail Turn Assist Available in 4L or 4H	Switch to four-wheel drive low (4L) or four-wheel drive high (4H) to activate trail turn assist. See **Selecting a Four-Wheel Drive Mode** (page 261).
Trail Turn Assist Not Available See Manual	Trail turn assist system malfunction could be present. If this condition persists, have your vehicle serviced.
Trail Turn Assist ON	You have activated trail turn assist.
Trail Turn Assist OFF	You have switched trail turn assist off.

TRAIL TURN ASSIST – FREQUENTLY ASKED QUESTIONS

Why does Trail Turn Assist not activate after unlocking the rear differential?

The rear differential may not be fully disengaged. When possible, turn off the rear axle locker while driving immediately before using trail turn assist. If you are already in a tight turn when you encounter this situation, driving the vehicle for a short distance in reverse could allow the differential to fully disengage.

Ranger (TRA, TRB) Vehicles Built From: 01-11-2024, CG4010en enGBR, Edition date: 202407, DOM

WHAT IS HILL DESCENT CONTROL

Hill descent control allows the driver to set and maintain vehicle speed while descending steep slopes in various surface conditions.

HOW DOES HILL DESCENT CONTROL WORK

When hill descent control is active, it functions up to speeds of 32 km/h (20 mph). When the vehicle speed exceeds 32 km/h (20 mph), the system remains on but inactive.

If the vehicle speed stays below 64 km/h (40 mph), hill descent control remains on but inactive. Under this condition, when the vehicle speed goes below 32 km/h (20 mph), the system becomes active and resumes maintaining vehicle speeds once the driver has selected a speed.

If the vehicle speed goes above 64 km/h (40 mph) hill descent control is powered off and does not resume without the driver reactivating the system.

HILL DESCENT CONTROL PRECAUTIONS

WARNING: The system does not control speed in low traction conditions or extremely steep slopes. The system is designed to be an aid and does not relieve you of your responsibility to drive with due care and attention. Failure to follow this instruction could result in personal injury.

WARNING: Hill descent control cannot control descent in all surface conditions and circumstances, such as ice or extremely steep grades. Hill descent control is a driver assist system and cannot substitute for good judgment by the driver. Failure to do so may result in loss of vehicle control, crash or serious injury.

WARNING: The system does not replace the parking brake. When you leave your vehicle, always apply the parking brake and shift the transmission into park (P) for automatic transmission or first gear for manual transmission.

SWITCHING HILL DESCENT CONTROL ON AND OFF

Press the button on the instrument panel or on the off-road screen (if so equipped). A light illuminates, a message is displayed and a tone sounds when the system is active.

SETTING THE HILL DESCENT SPEED

To increase or decrease the descent speed, press the accelerator or brake pedal, or use the SET **+** and SET **-** buttons on the steering wheel. Once you reach the preferred speed remove your feet from the pedals.

Note: *Increasing and decreasing the set speed can only be done in small increments.*

Ranger (TRA, TRB) Vehicles Built From: 01-11-2024, CG4010en enGBR, Edition date: 202407, DOM

HILL DESCENT CONTROL INDICATOR

Illuminates when you switch hill descent control on.

HILL DESCENT CONTROL – TROUBLESHOOTING

HILL DESCENT CONTROL – INFORMATION MESSAGES

Message	Action
For Hill Descent Reduce Speed XX MPH/km/h or Less	Your vehicle speed requirement for off-road mode entry has not been met.
For hill descent select gear	You need to select a transmission gear for hill descent mode.
Hill descent control Driver resume control	Hill descent control mode is deactivated and you must resume control.
Hill Descent Control Malfunction	A hill descent system fault is present.
Hill Descent Control Off System Cooling	The hill descent system is cooling due to overuse.
Hill Descent Control not available with Cruise Control active	The hill descent system cannot activate while Cruise Control is actively controlling speed.

Ranger (TRA, TRB) Vehicles Built From: 01-11-2024, CG4010en enGBR, Edition date: 202407, DOM

ELECTRIC POWER STEERING

HOW DOES ELECTRIC POWER STEERING WORK

The electric power steering system assists the brake system to help operate advanced stability control and accident avoidance systems.

If your vehicle loses electrical power or detects a concern when you are driving, the system switches to reduced steering assist or manual steering. Additionally, whenever disconnecting the battery or installing a new one, you must drive your vehicle a short distance before the system relearns the strategy and reactivates all systems.

ELECTRIC POWER STEERING PRECAUTIONS

WARNING: The electric power steering system has diagnostic checks that continuously monitor the system. If a fault is detected, a message displays in the information display. Stop your vehicle as soon as it is safe to do so. Switch the vehicle off. After at least 10 seconds, switch the vehicle on and watch the information display for a steering system warning message. If a steering system warning message returns, have the system checked as soon as possible.

WARNING: If the system detects an error, you may not feel a difference in the steering, however a serious condition may exist. Have your vehicle checked as soon as possible. Failure to do so may result in loss of steering control.

Adapt your speed and driving behavior according to reduced steering assist.

Extreme continuous steering may increase the effort to steer. This occurs to prevent internal overheating and damage to the steering system. If this occurs, you will not lose the ability to steer your vehicle manually nor will it cause damage to the system. Normal steering and driving allows the system to cool down and steering assist returns to normal.

Note: *There is no fluid reservoir to check or fill.*

When your vehicle is still moving, a significant decrease in steering assistance or a loss of steering assistance could occur if:

- You switch your vehicle off.
- Your vehicle loses electrical power.
- Your vehicle detects a concern.

When your vehicle is off and your vehicle begins moving, there is no steering assistance.

STEERING – TROUBLESHOOTING

STEERING – WARNING LAMPS

The electric power steering system indicator illuminates if the system detects a fault during the continuous diagnostic checks.

Note: *If a red warning message displays, stop your vehicle as soon as it is safe to do so.*

STEERING – INFORMATION MESSAGES

Message	Action
Steering malfunction Service now	The power steering system has detected a condition that requires service. Have your vehicle checked as soon as possible.
Steering loss Stop safely	The power steering system is not working. Stop your vehicle in a safe place. Have your vehicle checked as soon as possible.
Steering assist malfunction Service required	The power steering system has detected a condition that requires service. Have your vehicle checked as soon as possible.
Steering Lock Malfunction Service Now	The steering system has detected a condition that could prevent you from starting your vehicle. Have your vehicle checked as soon as possible.

STEERING – FREQUENTLY ASKED QUESTIONS

Why does it seem that the steering is wandering or pulling?

- Check your vehicle for an improperly inflated or uneven tire, loose or worn suspension or steering components, or improper vehicle alignment.

The system is functioning properly and the components have been checked, why is the steering system continuing to pull or wander?

- A high crown in the road or crosswinds could make the steering system feel like it is wandering or pulling.

Ranger (TRA, TRB) Vehicles Built From: 01-11-2024, CG4010en enGBR, Edition date: 202407, DOM

PARKING AID PRECAUTIONS

WARNING: To help avoid personal injury, always use caution when in reverse (R) and when using the sensing system.

WARNING: The system may not detect objects with surfaces that absorb reflection. Always drive with due care and attention. Failure to take care may result in a crash.

WARNING: Traffic control systems, fluorescent lamps, inclement weather, air brakes, external motors and fans may affect the correct operation of the sensing system. This may cause reduced performance or false alerts.

WARNING: The system may not detect small or moving objects, particularly those close to the ground.

WARNING: The parking aid system can only assist you to detect objects when your vehicle is moving at parking speeds. To help avoid personal injury you must take care when using the parking aid system.

WARNING: The system may not function if the sensor is blocked.

WARNING: In cold and severe weather conditions the system may not function. Rain, snow and spray can all limit sensor performance.

WARNING: If damage occurs in the immediate area surrounding the sensor, have your vehicle checked as soon as possible.

Note: *If your vehicle sustains damage leaving the sensors misaligned, this will cause inaccurate measurements or false alerts.*

When you connect a trailer to your vehicle, the rear parking aid detects the trailer and provides an alert. Disable the parking aid when you connect a trailer to prevent the alert.

Note: *Connected trailers might be detected by the vehicle and parking aid turns off automatically in those instances.*

Note: *Certain add-on devices installed around the bumper or fascia may create false alerts. For example, large trailer hitches, bike or surfboard racks, license plate brackets, bumper covers or any other device could block the normal detection zone of the parking aid system. Aftermarket spare tires or spare tire covers mounted to the rear tailgate could cause false alerts from the park aid system. Remove the add-on device to prevent false alerts.*

Note: *Keep the sensors free from snow, ice and large accumulations of dirt. If the sensors are covered, the system's accuracy can be affected.*

Do not clean the sensors with sharp objects.

SWITCHING PARKING AID ON AND OFF

Using the Parking Aid Button (If Equipped)

Press the parking aid button to switch the audible tone on and off.

Note: *Your vehicle may have either of the parking aid button options shown.*

Ranger (TRA, TRB) Vehicles Built From: 01-11-2024, CG4010en enGBR, Edition date: 202407, DOM

Note: *Parking aids remain on at all times. You can only mute the system.*

Using the Touchscreen

You can also mute the system by pressing the parking button that appears on the touchscreen when you are in reverse (R) or when you access the camera view.

REAR PARKING AID

WHAT IS THE REAR PARKING AID

Rear parking sensors detect objects behind your vehicle when in reverse (R).

REAR PARKING AID LIMITATIONS

There is a decreased coverage area at the outer corners.

The rear parking aid sensors are active when your vehicle is in reverse (R) and the vehicle speed is less than 8 km/h (5 mph).

The sensor coverage area is up to 180 cm (71 in) from the rear bumper.

The rear parking aid detects large objects when you shift into reverse (R) and any of the following occur:

- Your vehicle is moving backward at a low speed.
- Your vehicle is stationary but an object is approaching the rear of your vehicle at a low speed.
- Your vehicle is moving backward at a low speed and an object is moving towards your vehicle, for example another vehicle at a low speed.

The system shall provide no audible warning for the object behind the vehicle when in neutral (N) gear.

LOCATING THE REAR PARKING AID SENSORS

The rear parking aid sensors are in the rear bumper.

REAR PARKING AID AUDIBLE WARNINGS

A warning tone sounds when your vehicle approaches an object. As your vehicle moves closer to an object, the rate of the tone increases. The warning tone continuously sounds when an object is 30 cm (12 in) or less from the rear bumper.

If your vehicle remains stationary for a few seconds, the audible warning turns off. If your vehicle moves backward the tone sounds again.

Note: *When the parking aid system sounds a tone, the audio system may reduce the set volume.*

FRONT PARKING AID

WHAT IS THE FRONT PARKING AID

Front parking sensors detect objects in front of your vehicle.

Ranger (TRA, TRB) Vehicles Built From: 01-11-2024, CG4010en enGBR, Edition date: 202407, DOM

FRONT PARKING AID LIMITATIONS

The front parking aid sensors are active when your vehicle is in any position other than park (P) and the vehicle speed is less than 8 km/h (5 mph).

The sensor coverage area is up to 70 cm (28 in) from the front bumper.

If your vehicle is in reverse (R), the front parking aid detects objects and provides an audible warning when your vehicle is moving at a low speed and when an object is moving toward your vehicle, for example, another vehicle at a low speed. If your vehicle remains stationary for a few seconds, the audible warning turns off. Visual indication is always active in reverse (R).

If your vehicle is in any forward gear, the front parking aid provides audible warnings and a visual indication when your vehicle is moving at a speed of 8 km/h (5 mph) or below and the system detects an object within the detection zone. If your vehicle remains stationary for a few seconds, the visual indication and audible warning turns off.

If your vehicle is in neutral (N), the front and rear sensors provide a visual indication only when your vehicle is moving below a speed of 8 km/h (5 mph) and the system detects obstacles inside the detection areas. Once your vehicle stops, the visual indication stops after a few seconds.

LOCATING THE FRONT PARKING AID SENSORS

The front parking aid sensors are in the front bumper.

FRONT PARKING AID AUDIBLE WARNINGS

A warning tone sounds when there is an object within 70 cm (28 in) from the front bumper. As your vehicle moves closer to an object, the rate of the tone increases.

The warning tone continuously sounds when an object is 30 cm (12 in) or less from the front bumper.

Note: *If your vehicle remains stationary, the audible and visual warnings turn off. If your vehicle moves forward, the audible and visual warnings resume. If the detected object is 30 cm (12 in) or less from your vehicle, visual indication remains on.*

Ranger (TRA, TRB) Vehicles Built From: 01-11-2024, CG4010en enGBR, Edition date: 202407, DOM

PARKING AID INDICATORS

Parking Aid Indicators Shown When 360 Degree Camera Views are not Available

The system provides object distance indication through the touchscreen.

- As the distance to an object decreases, the indicators change color. The indicators for closer objects appear closer to the vehicle icon.
- The indicators are green when the object is at the farthest detection point. As the object gets closer, the indicators turn amber. When the object is at the closest detection point, the indicators turn red.
- If there is no object detected, the distance indicators are not activated.

The activated visual indicators continue displaying when your vehicle is stopped in reverse (R). If stopped in drive (D) or neutral (N), the activated visual indicators disappear after four seconds.

Note: *If stopped in drive (D) or neutral (N) with rear camera delay mode showing the rear camera view, the activated visual indicators continue displaying.*

Parking aids are not available in the following situations:

- The system is switched off.
- A trailer is connected. Only rear park aid is not available.
- Sensors are blocked.
- A system fault occurs.

Note: *If the parking aids are not available, the distance indicators do not display. See* ***Parking Aids – Troubleshooting*** *(page 311).*

Note: *Front and side park aid indicators may not be available.*

Parking Aid Indicators Shown in 360 Degree Camera Views (If Equipped)

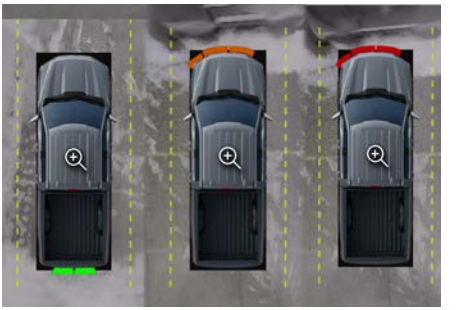

The system provides object distance indication through the touchscreen.

- As the distance to an object decreases, the indicators change color.
- The indicators are green when the object is at the farthest detection point. As the object gets closer, the indicators turn amber. When the object is at the closest detection point, the indicators turn red.
- If there is no object detected, the distance indicators are not activated.

The activated visual indicators continue displaying when your vehicle is stopped in reverse (R). If stopped in drive (D) or neutral (N), the activated visual indicators disappear after four seconds.

Note: *If stopped in drive (D) or neutral (N) with rear camera delay mode showing the rear camera view, the activated visual indicators continue displaying.*

Parking aids are not available in the following situations:

- The system is switched off.
- A trailer is connected.
- Sensors are blocked. The distance indicators appear white.
- A system fault occurs.

Note: *If the parking aids are not available, the distance indicators do not display.* *See **Parking Aids – Troubleshooting** (page 311).*

PARKING AIDS – TROUBLESHOOTING

PARKING AIDS – INFORMATION MESSAGES

If a fault is present in the parking aids, a warning message appears in the instrument cluster or the touchscreen.

Message	Action
Park Aid Fault	The system detects a condition that requires service. Have your vehicle checked as soon as possible. You may be able to resolve by cleaning the sensors and restarting your vehicle.
Parking Sensors Blocked	Inclement weather, ice, mud, or water is blocking the sensor, causing the system to become unavailable. You can typically clean the sensor to resolve.
Trailer Connected	An electrical trailer connection is sensed during a given ignition cycle.

Ranger (TRA, TRB) Vehicles Built From: 01-11-2024, CG4010en enGBR, Edition date: 202407, DOM

WHAT IS THE REAR VIEW CAMERA - VEHICLES WITH: DIGITAL REAR VIEW CAMERA

The rear view camera provides a video image of the area behind your vehicle when the transmission is in reverse (R).

You can access the rear view camera by pressing the button on the touchscreen.

WHAT IS THE REAR VIEW CAMERA - VEHICLES WITH: ANALOG REAR VIEW CAMERA

The rear view camera provides a video image of the area behind your vehicle when the transmission is in reverse (R).

REAR VIEW CAMERA PRECAUTIONS

WARNING: The rear view camera system is a reverse aid supplement device that still requires the driver to use it in conjunction with the interior and exterior mirrors for maximum coverage.

WARNING: Objects that are close to either corner of the bumper or under the bumper, might not be seen on the screen due to the limited coverage of the camera system.

WARNING: Objects above the camera may not be visible. Check the area behind your vehicle when necessary.

WARNING: Reverse your vehicle slowly. Failure to follow this instruction could result in the loss of control of your vehicle, personal injury or death.

WARNING: Use caution when the tailgate is ajar. If the tailgate is ajar, the camera is out of position and the video image could be incorrect.

WARNING: Do not switch the camera features on or off when your vehicle is moving.

Note: *When towing, the camera only sees what you are towing. This might not provide adequate coverage and you might not see some objects. In some vehicles, the guide lines may disappear when you connect the trailer tow connector.*

LOCATING THE REAR VIEW CAMERA

The rear view camera is on the tailgate. It provides a video image of the area behind your vehicle.

Ranger (TRA, TRB) Vehicles Built From: 01-11-2024, CG4010en enGBR, Edition date: 202407, DOM

REAR VIEW CAMERA GUIDE LINES

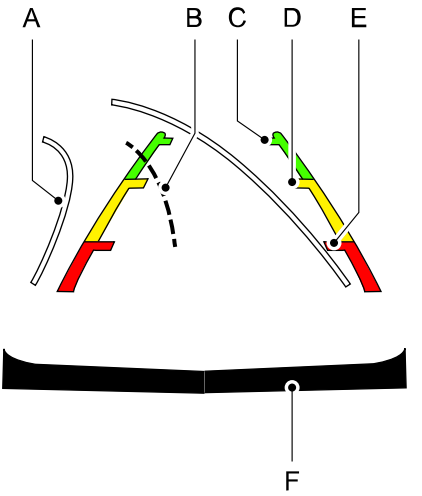

A	Active guide lines.
B	Centerline.
C	Fixed guide line: Green zone.
D	Fixed guide line: Yellow zone.
E	Fixed guide line: Red zone.
F	Rear bumper.

Active guide lines only show with fixed guide lines. To use active guide lines, turn the steering wheel to point the guide lines toward an intended path. If the steering wheel position changes while reversing, your vehicle might deviate from the intended path.

The fixed and active guide lines fade in and out depending on the steering wheel position. The active guide lines do not display when the steering wheel position is straight.

Use caution while reversing. Objects in the red zone are closest to your vehicle and objects in the green zone are farther away. Objects get closer to your vehicle as they move from the green zone to the yellow or red zones. Use the side view mirrors and rear view mirror to get better coverage on both sides and rear of your vehicle.

Note: *Active guide lines and fixed guide lines are only available when the transmission is in reverse (R).*

Note: *The centerline is only available if the active or fixed guide lines are on.*

Note: *Not all camera modes work properly without an auxiliary camera.*

REAR VIEW CAMERA SETTINGS

ZOOMING THE REAR VIEW CAMERA IN AND OUT

WARNING: When manual zoom is on, the full area behind your vehicle may not show. Be aware of your surroundings when using the manual zoom feature.

Selectable settings for this feature are zoom in (+) and zoom out (-). Press the symbol on the camera screen to change the view. The default setting is zoom off.

This allows you to get a closer view of an object behind your vehicle. The zoomed image keeps the bumper in the image to provide a reference. The zoom is only active while the transmission is in reverse (R).

Ranger (TRA, TRB) Vehicles Built From: 01-11-2024, CG4010en enGBR, Edition date: 202407, DOM

Note: *Manual zoom is only available when the transmission is in reverse (R).*

Note: *Only the centerline shows when you enable manual zoom.*

SWITCHING REAR VIEW CAMERA DELAY ON AND OFF - VEHICLES WITH: DIGITAL REAR VIEW CAMERA

1. Open the driver assistance menu. See **Center Display** (page 599).
2. Switch ***Rear View Camera Delay*** on or off.

When shifting the transmission out of reverse (R) and into any gear other than park (P), the camera image remains in the display until the vehicle speed reaches approximately 8 km/h (5 mph) or you shift your vehicle into park (P).

SWITCHING THE REAR VIEW CAMERA VIEW - VEHICLES WITH: DIGITAL REAR VIEW CAMERA

Press to access the different camera views.

Rear normal view provides an image of what is directly behind your vehicle.

Rear split view provides an extended view of what is behind your vehicle.

Note: *Rear split view is not available when your vehicle speed is greater than 10 km/h (6 mph)*

The hitch view provides an image of the area around the tow hitch. This view is only available to vehicles with trailer wiring.

Trailer AUX camera shows a rear view camera image of what is behind your trailer. This camera view may not be available depending on your vehicle features.

Rear Views at Speed

Note: *This view is only available to vehicles with trailer wiring.*

Rear normal view, hitch view and trailer aux view are available when your speed is greater than 10 km/h (6 mph).

Press the camera button on the touchscreen with your vehicle at a stop in park (P), neutral (N) or drive (D). Then select the required rear view. The view is visible during takeoff and afterward. You can exit the view any time by pressing the X button, returning to the sync screen.

Automatic Rear Split View

When your vehicle is in reverse (R), the camera view automatically switches to rear split view whenever the cross traffic alert system is active.

To switch automatic rear split view on and off:

1. Open the driver assistance menu. See **Center Display** (page 599).
2. Switch Automatic Rear Split View on or off.

Ranger (TRA, TRB) Vehicles Built From: 01-11-2024, CG4010en enGBR, Edition date: 202407, DOM

WHAT IS THE 360 DEGREE CAMERA

The 360 degree camera system provides visibility around your vehicle in parking maneuvers such as:

- Centering in a parking space.
- Obstacles near your vehicle.
- Parallel parking.

The 360 degree camera system consists of front, side and rear cameras.

HOW DOES THE 360 DEGREE CAMERA WORK

The 360 degree camera system:

- Allows you to see what is directly in front of or behind your vehicle.
- Helps you when parallel parking and centering in a parking space.
- Provides a cross traffic view in front of and behind your vehicle.
- Allows you to see a top-down view of the area outside your vehicle, including the blind spots and obstacles near your vehicle.

360 DEGREE CAMERA PRECAUTIONS

WARNING: The 360 degree camera system still requires the driver to use it in conjunction with looking out of the windows, and checking the interior and exterior mirrors for maximum coverage.

WARNING: Objects that are close to either corner of the bumper or under the bumper, might not be seen on the screen due to the limited coverage of the camera system.

WARNING: Use caution when the tailgate is ajar. If the tailgate is ajar, the camera is out of position and the video image could be incorrect.

WARNING: When manual zoom is on, the full area behind your vehicle may not show. Be aware of your surroundings when using the manual zoom feature.

WARNING: Do not switch the camera features on or off when your vehicle is moving.

WARNING: You are responsible for controlling your vehicle at all times. The system is designed to be an aid and does not relieve you of your responsibility to drive with due care and attention. Failure to follow this instruction could result in the loss of control of your vehicle, personal injury or death.

Note: *Use caution when the side mirrors are folded. If the side mirrors are folded, the cameras are out of position and the video image could be incorrect.*

LOCATING THE 360 DEGREE CAMERAS

Rear View Camera

The rear view camera is on the tailgate. It provides a video image of the area behind your vehicle.

Ranger (TRA, TRB) Vehicles Built From: 01-11-2024, CG4010en enGBR, Edition date: 202407, DOM

Front View Camera

The front view camera is in the front grille. It provides a video image of the area in front of your vehicle.

Note: *For vehicles with selectable drive modes, the front view camera switches on when you are in mud/ruts, deep snow/sand, rock crawl or baja mode, or in four-wheel drive low.*

Note: *Depending on your vehicle, some modes may not be available.*

Side View Cameras

The side view cameras are on the outside mirrors. They provide a video image of the area on the sides of your vehicle to aid you when parking or when backing up a trailer.

360 DEGREE CAMERA GUIDE LINES

Note: *Active guidelines are only available when the transmission is in reverse (R).*

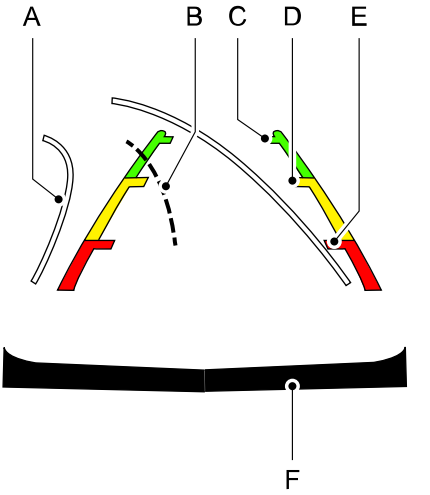

A	Active guidelines.
B	Centerline.
C	Fixed guideline: Green zone.
D	Fixed guideline: Yellow zone.
E	Fixed guideline: Red zone.
F	Rear bumper.

Active guidelines only show with fixed guidelines. Turn the steering wheel to point the guidelines toward an intended path. If the steering wheel position changes when reversing, your vehicle could deviate from the intended path.

The fixed and active guidelines fade in and out depending on the steering wheel position. The active guidelines do not display when the steering wheel position is straight.

Objects in the red zone are closest to your vehicle and objects in the green zone are farther away. Objects get closer to your vehicle as they move from the green zone to the yellow or red zones. Use the side view mirrors and rear view mirror to get better coverage on both sides and rear of your vehicle.

Keep Out Zone

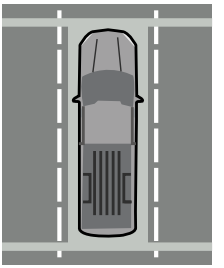

The keep out zone is represented by the yellow dotted lines running parallel to your vehicle.

360 Camera Unseen Area

This is the black box region that surrounds the 360 vehicle avatar. This depicts the area around the vehicle that the cameras are unable to see.

360 DEGREE CAMERA SETTINGS

SWITCHING THE 360 DEGREE CAMERA ON AND OFF

Press the camera button at the top of the touchscreen.

Note: *When you press the camera button, it defaults to the front 360 camera view. The other front camera views are accessible on the touchscreen.*

Note: *The rear view camera activates when you shift into reverse (R). Additional views are then accessible on the touchscreen.*

When in park (P), neutral (N) or drive (D), the front images display when you press the camera button.

Note: *Not all cameras are available.*

Note: *The 360 degree camera system turns off when your vehicle is in motion at low speed, except when in reverse (R).*

Switching Additional Views On and Off

You can switch additional camera views on and off via the touchscreen.

Trailer Side View

Trailer side view activates using the turn signal with a trailer attached. It provides a side view of the vehicle and trailer for better visibility during lane changes and turns.

To switch trailer side view on and off:

1. Open the driver assistance menu. See **Center Display** (page 599).
2. Switch Trailer Side View on or off.

Automatic Rear Split View

When your vehicle is in reverse (R), the camera view automatically switches to rear split view whenever the cross traffic alert system is active.

To switch automatic rear split view on and off:

1. Open the driver assistance menu. See **Center Display** (page 599).
2. Switch Automatic Rear Split View on or off.

Ranger (TRA, TRB) Vehicles Built From: 01-11-2024, CG4010en enGBR, Edition date: 202407, DOM

SWITCHING THE 360 DEGREE CAMERA VIEW

Press to access the different camera views.

Front normal view provides an image of what is directly in front of your vehicle.

Front split view provides an extended view of what is in front of your vehicle.

Normal + 360 degree view contains the normal camera view next to a 360 degree camera view.

Rear normal view provides an image of what is directly behind your vehicle.

Rear split view provides an extended view of what is behind your vehicle.

50/50 view provides views of the left and right side of your vehicle. It is available in park (P), neutral (N) and drive (D).

Trailer AUX camera view shows a rear view camera image of what is behind your trailer. This camera is purchased and installed separately.

Trailer reverse guidance shows the sides of your truck and trailer. See **Trailer Reverse Guidance** (page 430).

The hitch view provides an image of the area around the tow hitch.

Zooms in on the image. See **Connecting a Trailer** (page 407).

Zooms in on the 360 degree image. Also provides access to corner zoom views and front and rear offset views with tire guidelines depending on what gear and which drive mode you are in.

Rear Views at Speed

Note: *The rear normal view, hitch view and 50/50 view are also available when your vehicle speed is greater than 6 mph (10 kph). Intended for trailering and load carrying purposes.*

Turn on stationary in park (P), neutral (N) or drive (D) and press the camera button on the touchscreen. Then select the required rear view. The view is visible during takeoff and afterward. You can exit the view any time by pressing the X button, returning to the touchscreen.

Note: *Pressing the camera soft button while in motion returns you to the last active view.*

Ranger (TRA, TRB) Vehicles Built From: 01-11-2024, CG4010en enGBR, Edition date: 202407, DOM

WHAT IS CRUISE CONTROL

Cruise control lets you maintain a set speed without keeping your foot on the accelerator pedal.

Requirements

Use cruise control when the vehicle speed is greater than 20 km/h in metric units or 15 mph in imperial units.

SWITCHING CRUISE CONTROL ON AND OFF

WARNING: Do not use cruise control on winding roads, in heavy traffic or when the road surface is slippery. This could result in loss of vehicle control, serious injury or death.

The cruise controls are on the steering wheel.

Switching Cruise Control On

Press the button to activate the system. When the system activates, the set speed is equal to the current vehicle speed or 20 km/h (15 mph), whichever is greater. If the speed is too low, or other conditions are not correct for cruise control activation, the system enters standby mode.

Switching Cruise Control Off

Press the button when the system is active or switch the ignition off.

Note: *When you switch cruise control off, the set speed clears.*

SETTING THE CRUISE CONTROL SPEED

WARNING: When you are going downhill, your vehicle speed could increase above the set speed. The system does not apply the brakes.

Drive to the speed you prefer.

Press the toggle button upward or downward to set the current speed.

Take your foot off the accelerator pedal.

Note: *The indicator changes color in the instrument cluster display.*

Changing the Set Speed

Press and release the toggle button up to increase the set speed in small increments.

Press and hold the toggle button up to accelerate. Release the button when you have reached your preferred speed.

Press and release the toggle button down to decrease the set speed in small increments.

Press and hold the toggle button down to decelerate. Release the button when you have reached your preferred speed.

Note: *If you accelerate by pressing the accelerator pedal, the set speed does not change. When you release the accelerator pedal, your vehicle returns to the speed that you previously set.*

Ranger (TRA, TRB) Vehicles Built From: 01-11-2024, CG4010en enGBR, Edition date: 202407, DOM

CANCELING THE SET SPEED

Press the button, or tap the brake pedal to cancel the set speed.

Note: *The system remembers the set speed.*

Note: *The system cancels if the vehicle speed drops below 16 km/h (10 mph) under the set speed when driving uphill.*

RESUMING THE SET SPEED

Press the button.

CRUISE CONTROL INDICATORS

Illuminates when you switch the system on.

Ranger (TRA, TRB) Vehicles Built From: 01-11-2024, CG4010en enGBR, Edition date: 202407, DOM

HOW DOES ADAPTIVE CRUISE CONTROL WORK

Adaptive cruise control uses a radar sensor to adjust your vehicle speed to maintain a set gap between you and the vehicle in front of you in the same lane.

HOW DOES ADAPTIVE CRUISE CONTROL WITH STOP AND GO WORK

Adaptive cruise control with stop and go uses radar and camera sensors to maintain a set gap between your vehicle and the vehicle in front of you while following it to a complete stop. Stop and go can also be set to follow a vehicle directly in front of you and adjust the set speed, while you are at a complete stop.

ADAPTIVE CRUISE CONTROL PRECAUTIONS

WARNING: You are responsible for controlling your vehicle at all times. The system is designed to be an aid and does not relieve you of your responsibility to drive with due care and attention. Failure to follow this instruction could result in the loss of control of your vehicle, personal injury or death.

WARNING: Do not use adaptive cruise control on winding roads, in heavy traffic or when the road surface is slippery. This could result in loss of vehicle control, serious injury or death.

WARNING: Pay close attention to changing road conditions such as entering or leaving a highway, on roads with intersections or roundabouts, roads without visible lanes of travel, roads that are unpaved, or steep slopes, railroad crossings, pedestrian crossings, and school zones. Failure to follow this instruction could result in the loss of control of your vehicle, personal injury or death.

WARNING: The system does not control speed in low traction conditions or extremely steep slopes. The system is designed to be an aid and does not relieve you of your responsibility to drive with due care and attention. Failure to follow this instruction could result in personal injury.

WARNING: The system is not a crash warning or avoidance system.

WARNING: Do not use the system when towing a trailer that has aftermarket electronic trailer brake controls. Failure to follow this instruction could result in the loss of control of your vehicle, personal injury or death.

WARNING: Do not use tire sizes other than those recommended because this can affect the normal operation of the system. Failure to do so may result in a loss of vehicle control, which could result in serious injury.

WARNING: Do not use the system with a snow plow blade installed.

WARNING: In situations with poor visibility, such as fog, heavy rain or other inclement weather, you may need to override or completely switch off the system.

Ranger (TRA, TRB) Vehicles Built From: 01-11-2024, CG4010en enGBR, Edition date: 202407, DOM

When Following a Vehicle

WARNING: When following a vehicle that is braking, your vehicle does not always decelerate quickly enough to avoid a crash without driver intervention. Apply the brakes when necessary. Failure to follow this instruction could result in personal injury or death.

Hilly Condition Usage

You should select a lower gear when the system is active in situations such as prolonged downhill driving on steep slopes, for example in mountainous areas. The system needs additional engine braking in these situations to reduce the load on the vehicle's regular brake system to prevent it from overheating.

Note: *An audible alarm sounds and the system shuts down if it applies brakes for an extended period of time. This allows the brakes to cool. The system functions normally again after the brakes cool.*

ADAPTIVE CRUISE CONTROL LIMITATIONS

Sensor Limitations

WARNING: On rare occasions, detection issues can occur due to the road infrastructures, for example bridges, tunnels and safety barriers. In these cases, the system may brake late or unexpectedly. At all times, you are responsible for controlling your vehicle, supervising the system and intervening, if required.

WARNING: If the system malfunctions, have your vehicle checked as soon as possible.

WARNING: Large contrasts in outside lighting can limit sensor performance.

WARNING: The system only warns of vehicles detected by the radar sensor. In some cases there may be no warning or a delayed warning. Apply the brakes when necessary. Failure to follow this instruction could result in personal injury or death.

WARNING: The system may not detect stationary or slow moving vehicles below 10 km/h (6 mph).

WARNING: The system does not detect pedestrians or objects in the road.

WARNING: The system does not detect oncoming vehicles in the same lane.

WARNING: The system may not operate properly if the sensor is blocked. Keep the windshield free from obstruction.

WARNING: The system may incorrectly track lane markings as other structures or objects. This can result in a false or missed warning.

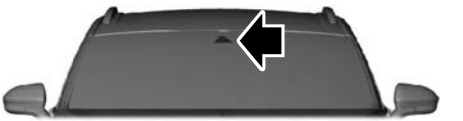

Ranger (TRA, TRB) Vehicles Built From: 01-11-2024, CG4010en enGBR, Edition date: 202407, DOM

The camera is mounted on the windshield behind the interior mirror.

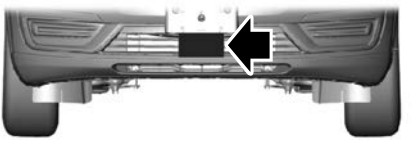

The radar sensor is in the lower grille.

Note: *You cannot see the sensor. It is behind a fascia panel.*

Note: *Keep the front of your vehicle free of dirt, metal badges or objects. Vehicle front protectors, aftermarket lights, additional paint or plastic coatings could also degrade sensor performance.*

A message displays if something obstructs the camera or the sensor. When something blocks the sensor, the system cannot detect a vehicle ahead and does not function. See **Adaptive Cruise Control – Information Messages** (page 333).

The radar sensor has a limited field of view. It may not detect vehicles at all or detect a vehicle later than expected in some situations. The lead vehicle image does not illuminate if the system does not detect a vehicle in front of you.

Detection issues can occur:

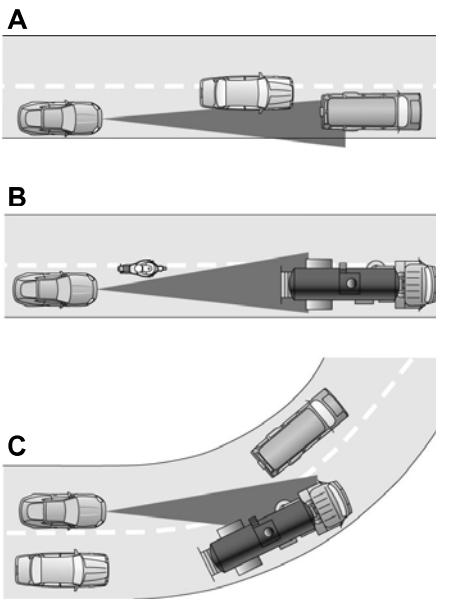

A When driving on a different line than the vehicle in front.

B With vehicles that edge into your lane. The system can only detect these vehicles once they move fully into your lane.

C There may be issues with the detection of vehicles in front when driving into and coming out of a bend or curve in the road.

In these cases, the system may brake late or unexpectedly.

If something hits the front end of your vehicle or damage occurs, the radar-sensing zone may change. This could cause missed or false vehicle detection.

Ranger (TRA, TRB) Vehicles Built From: 01-11-2024, CG4010en enGBR, Edition date: 202407, DOM

Optimal system performance requires a clear view of the road by the windshield-mounted camera.

Optimal performance may not occur if:

- The camera is blocked.
- There is poor visibility or lighting conditions.
- There are bad weather conditions.

SWITCHING ADAPTIVE CRUISE CONTROL ON AND OFF

The cruise controls are on the steering wheel.

Switching Adaptive Cruise Control On

Press the button to activate the system. When the system activates, the set speed is equal to whichever is greater, the current vehicle speed, or 15 mph when in imperial units or 20 km/h when in metric units. If the speed is too low, or other conditions are not correct for adaptive cruise control activation, the system enters standby mode. When you are below 12 mph (20 km/h), adaptive cruise control does not activate unless you are following another vehicle. The system will activate at 12 mph (20 km/h), but will automatically set to the minimum set speed of 15 mph when in imperial units.

The indicator, current gap setting and set speed appear in the instrument cluster display.

Switching Adaptive Cruise Control Off

Press the button when the system is in standby mode or switch your vehicle off.

Note: *When you switch the system off, the set speed clears.*

ADAPTIVE CRUISE CONTROL AUTOMATIC CANCELLATION

The system may cancel if:

- The tires lose traction.
- You apply the parking brake.

The system may cancel and set the parking brake if:

- You unbuckle the seatbelt and/or open the driver door after adaptive cruise control stops your vehicle.
- Adaptive cruise control holds your vehicle at a stop continuously for more than three minutes.

The system may deactivate or prevent activating when requested if:

- The vehicle has a blocked sensor.
- The brake temperature is too high.
- There is a failure in the system or a related system.

SETTING THE ADAPTIVE CRUISE CONTROL SPEED

Drive to the speed you prefer.

Press the toggle button up or down to set the current speed.

Take your foot off the accelerator pedal.

The indicator, current gap setting and set speed appear in the instrument cluster display.

A vehicle image illuminates if there is a vehicle detected in front of you.

Note: *When adaptive cruise control is active, the speedometer may vary slightly from the set speed displayed in the instrument cluster display.*

Setting the Adaptive Cruise Speed from a Complete Stop

SET+
SET-

Press the toggle button up or down while keeping the brake pedal fully pressed.

The set speed adjusts to 15 mph when in imperial units or 20 km/h when in metric units.

The indicator, current gap setting and set speed appear in the instrument cluster display.

Note: *The system activates from a complete stop only when it detects a lead vehicle in close proximity.*

Manually Changing the Set Speed

SET+

Press and release the toggle button up to increase the set speed in small increments. Press and hold the toggle button up to increase the set speed in large increments. Release the button when the set speed is equal to the preferred speed.

SET-

Press and release the toggle button down to decrease the set speed in small increments. Press and hold the toggle button down to decrease the set speed in large increments. Release the button when the set speed is equal to the preferred speed.

You can also press the accelerator or brake pedal until you reach the speed you prefer. Press the toggle button up or down to select the current speed as the set speed.

The system may apply the brakes to slow the vehicle to the new set speed. The set speed continuously displays in the instrument cluster display when the system is active.

SETTING THE ADAPTIVE CRUISE CONTROL GAP

Press the button to cycle through the four gap settings.

The selected gap appears in the instrument cluster display as shown by the bars in the image.

Note: *The gap setting is time dependent and therefore, the distance adjusts with your vehicle speed.*

Note: *It is your responsibility to select a gap appropriate to the driving conditions.*

Adaptive Cruise Control Gap Settings

Graphic Display, Bars Indicated Between Vehicles	Gap Distance	Dynamic Behavior
1	Closest.	Sport.
2	Close.	Normal.
3	Medium.	Normal.
4	Far.	Comfort.

Each time you switch the system on, it selects the last chosen gap setting.

Following a Vehicle

When a vehicle ahead of you enters the same lane or a slower vehicle is ahead in the same lane, the vehicle speed adjusts to maintain the gap setting.

Note: *When you are following a vehicle and you switch on a turn signal lamp, adaptive cruise control may provide a small, temporary acceleration to help you pass.*

Your vehicle maintains a consistent gap from the vehicle ahead until:

- The vehicle in front of you accelerates to a speed above the set speed.
- The vehicle in front of you moves out of the lane you are in.
- You set a new gap distance.

The system applies the brakes to slow down your vehicle to maintain a safe gap distance from the vehicle in front of you. The system only applies limited braking. You can override the system by applying the brakes.

Note: *The brakes may emit noise when applied by the system.*

If the system determines that its maximum braking level is not sufficient, an audible warning sounds, a message appears in the instrument cluster display and an indicator flashes when the system continues to brake. Take immediate action.

CANCELING THE SET SPEED

Press the button or tap the brake pedal.

The set speed does not erase.

RESUMING THE SET SPEED

Press the button.

Your vehicle speed returns to the previously set speed and gap setting. The set speed displays continuously in the instrument cluster display when the system is active.

Note: *Only use resume if you are aware of the set speed and intend to return to it.*

Resuming the Set Speed from a Complete Stop

If your vehicle follows a vehicle to a complete stop and remains stationary for less than a few seconds, your vehicle accelerates from a stationary position to follow the vehicle ahead.

If your vehicle follows a vehicle to a complete stop and remains stationary for more than a few seconds, an indicator and message displays.

Message	Details
Stopped	Cruise control does not resume automatically when this display is active.
Press button to resume	If the lead vehicle begins to move, you are prompted to press the resume button. Press and release the button or use the accelerator pedal to resume following the lead vehicle.
Auto-Resume	Displays when on a limited access highway after following a vehicle to a complete stop. In this situation, the vehicle resumes following the lead vehicle without a button press or pressing the accelerator pedal. The system can remain in auto-resume state for approximately 30 seconds, after which it no longer automatically resumes.

OVERRIDING THE SET SPEED

WARNING: If you override the system by pressing the accelerator pedal, it does not automatically apply the brakes to maintain a gap from any vehicle ahead.

When you press the accelerator pedal, you override the set speed and gap distance.

Use the accelerator pedal to intentionally exceed the set speed limit.

When you override the system, the indicator remains blue, the set speed is dimmed and the lead vehicle icon does not appear in the instrument cluster display.

The system resumes operation when you release the accelerator pedal. The vehicle speed decreases to the set speed, or a lower speed if following a slower vehicle.

ADAPTIVE CRUISE CONTROL INDICATORS

Illuminates when you switch adaptive cruise control on. The color of the indicator changes to indicate the system status.

White indicates the system is on but inactive.

Blue indicates that you set the speed and the system is active.

SWITCHING FROM ADAPTIVE CRUISE CONTROL TO CRUISE CONTROL

WARNING: Normal cruise control will not brake when your vehicle is approaching slower vehicles. Always be aware of which mode you have selected and apply the brakes when necessary.

1. From the settings menu, press Driver Assistance. See **Center Display** (page 599).
2. Press Cruise Control.
3. Press Normal Cruise Control.

The cruise control indicator replaces the adaptive cruise control indicator if you select normal cruise control. The gap setting does not display, and the system does not respond to lead vehicles. Automatic emergency braking remains active to maintain set speed. The system remembers the last setting when you start your vehicle.

LANE CENTERING

HOW DOES LANE CENTERING WORK

Adaptive cruise control with lane centering uses the vehicle's front radar sensor and front windshield camera sensor, together with the steering sensor to operate.

Using these sensors, the system applies continuous steering assistance towards driving in the middle of the lane you choose on highway roads.

Note: *The gap setting for adaptive cruise control with lane centering, operates in the same way as normal adaptive cruise control.*

If you drive off-center within the lane, the system sets and maintains that preferred lane position. The system provides continuous assistance steering torque input toward the preferred position.

Note: *The system can only set preferred lane positions within the lane.*

Note: *If the system cancels, the preferred position erases. On the next activation, the system provides continuous assistance steering torque input toward the lane center.*

LANE CENTERING PRECAUTIONS

WARNING: Do not use the system when towing a trailer. Failure to follow this instruction could result in the loss of control of your vehicle, personal injury or death.

WARNING: Do not use the system if any changes or modifications to the steering wheel have been made. Any changes or modifications to the steering wheel could affect the functionality or performance of the system. Failure to follow this instruction could result in the loss of control of your vehicle, personal injury or death.

Adaptive cruise control precautions apply to lane centering unless stated otherwise or contradicted by a lane centering precaution. See **Adaptive Cruise Control Precautions** (page 321).

LANE CENTERING REQUIREMENTS

You must keep your hands on the steering wheel at all times.

Lane centering only activates when all of the following occur:

- Adaptive cruise control with lane centering is enabled in the touchscreen. See **Switching Lane Centering On and Off** (page 330).
- You have adaptive cruise control with stop and go enabled and set.
- The steering system detects your hands on the steering wheel.
- The system detects both lane markings when driving on a straight road.
- Your vehicle is initially centered in the lane between two visible line markings.
- A trailer is not detected.

Note: *If the system does not detect valid lane line markings, the system remains in standby until valid line markings are available.*

Note: *If the system does not detect your hands on the steering wheel, apply a slight force to the steering wheel.*

LANE CENTERING LIMITATIONS

Adaptive cruise control limitations apply to lane centering unless stated otherwise or contradicted by a lane centering limitation. See **Lane Centering Requirements** (page 329).

Lane Centering may not be able to center your vehicle in the lane in any of the following conditions:

- The lane is too narrow or wide.
- The curve in the road is too tight.
- The system does not detect the minimum required lane markings or when lanes merge or split.
- When the required steering effort to maintain lane center exceeds the lane centering system limit.
- When driving in areas that are under construction or when road work is in progress.
- If the front windshield camera and/or the front radar are blocked.
- When using a spare tire.
- Inclement weather conditions including, but not limited to, high wind, heavy rain, and fog.
- Driving into direct sunlight.
- When modification to the steering system has been made, including alterations to the steering wheel.
- When a trailer is detected, the system disables lane centering. See **Lane Centering Precautions** (page 328).

Note: *The system steering assistance is limited and may not have sufficient effort for all driving situations and/or conditions, such as driving through tight curves or driving through curves at high speeds.*

Note: *In exceptional conditions, the system may deviate from the lane center.*

Ranger (TRA, TRB) Vehicles Built From: 01-11-2024, CG4010en enGBR, Edition date: 202407, DOM

SWITCHING LANE CENTERING ON AND OFF

You must keep your hands on the steering wheel at all times.

The controls are on the steering wheel.

Press the button.

The indicator appears in the instrument cluster. When the lane centering system is on, the color of the indicator changes to indicate the system status.

You can override the system at any time by steering your vehicle.

Note: *The lane centering requirements must be met before you can enable the feature. See* ***Lane Centering Requirements*** *(page 329).*

Enabling and Disabling Lane Centering

1. From the settings menu, press Driver Assistance. See **Center Display** (page 599).
2. Press Cruise Control.
3. Press Adaptive Cruise Control.
4. Switch Lane Centering on or off.

LANE CENTERING ALERTS

You must keep your hands on the steering wheel at all times.

When the system is active and detects no steering activity for a period of time, the system alerts you to put your hands on the steering wheel. If you do not react to the warnings the system quickly applies and releases the brakes, activates the hazard lights, and slows your vehicle to a stop within the lane of travel while maintaining steering control. See **Lane Centering Automatic Cancellation** (page 330).

The system also alerts you if your vehicle crosses lane markings without detected steering activity.

Note: *The system could detect a light grip or touch on the steering wheel as hands-off driving.*

LANE CENTERING AUTOMATIC CANCELLATION

When an external condition cancels the system, for example, no lane markings available, an audible warning sounds and a message appears in the instrument cluster display.

When an external condition cancels the system, and your hands are not on the steering wheel, the system immediately alerts you to take control of the vehicle.

If this alert is ignored, the system quickly applies and releases the brakes, activates the hazard lights, and slows your vehicle to a stop within the lane of travel.

If your vehicle slows down or stops and you resume control, a message appears to prompt you to press the accelerator pedal to allow the system to resume.

Note: *If the system detects significant inactivity, a 'Lane Centering Unavailable' message displays in the instrument cluster and lane centering is disabled until the next time you start your vehicle.*

Automatic cancellation can also occur if:

- The lane becomes too wide or too narrow.
- The system cannot detect valid lane markings.
- Lane markings cross over one another.
- The curve of the road is too sharp.

Ranger (TRA, TRB) Vehicles Built From: 01-11-2024, CG4010en enGBR, Edition date: 202407, DOM

LANE CENTERING MANUAL CANCELLATION

When you perform the following actions, adaptive cruise control with lane centering will cancel:

- The brake pedal is pressed.
- Adaptive cruise control button on the steering wheel is switched off.

The lane centering system is momentarily suppressed when either of the following actions are performed:

- Turn signal indicator is latched or tapped.
- You steer the vehicle out of lane.

LANE CENTERING INDICATORS

Illuminates when you switch lane centering on. The color of the indicator changes to indicate the system status.

Gray/white status indicates the system is on but in standby mode.

Blue status indicates the system is enabled and applying steering assistance to keep the vehicle in the center of the lane.

Gray/white status with an audible tone, indicates a system automatic cancellation.

LANE CENTERING – TROUBLESHOOTING

LANE CENTERING – INFORMATION MESSAGES

Note: *Depending on your vehicle options and instrument cluster type, not all messages display or are available.*

Message	Action
Keep hands on steering wheel	You must return your hands to the steering wheel and provide steering input to cancel the message.
Lane centring assist not available	Lane centering is currently not available, due to conditions that prevent the system from becoming active. To reset the system, when the vehicle is stationary, return the gear selector to park (P) and turn the vehicle off. Then, restart the vehicle with your foot on the brake pedal.
Resume control	Adaptive cruise control with lane centering is about to cancel. You must immediately take full control of the vehicle.
Press accelerator pedal to resume	Adaptive cruise control with lane centering is in standby mode. When safe to do so, you can resume adaptive cruise control with lane centering by applying pressure on the accelerator pedal. Alternatively, you can also re-enable adaptive cruise control with lane centering by pressing the resume button on the steering wheel.

Ranger (TRA, TRB) Vehicles Built From: 01-11-2024, CG4010en enGBR, Edition date: 202407, DOM

INTELLIGENT ADAPTIVE CRUISE CONTROL

HOW DOES INTELLIGENT ADAPTIVE CRUISE CONTROL WORK

Intelligent adaptive cruise control combines speed sign recognition and navigation map data with adaptive cruise control to adjust the cruise set speed to the speed limit detected by the speed sign recognition system. As the system detects new speed signs, the set speed updates.

There are limitations that affect the accuracy of the speed sign recognition system and its ability to determine the current speed limit. The intelligent adaptive cruise control system and its ability to determine the current speed limit shares these limitations.

Note: *The adaptive cruise control gap setting operates normally when the feature is enabled.*

INTELLIGENT ADAPTIVE CRUISE CONTROL PRECAUTIONS

WARNING: You are responsible for controlling your vehicle at all times. The system is designed to be an aid and does not relieve you of your responsibility to drive with due care and attention. Failure to follow this instruction could result in the loss of control of your vehicle, personal injury or death.

INTELLIGENT ADAPTIVE CRUISE CONTROL REQUIREMENTS

Traffic sign recognition must be enabled for intelligent adaptive cruise control to be active.

INTELLIGENT ADAPTIVE CRUISE CONTROL LIMITATIONS

The speed limit information provided by the navigation map data could be inaccurate or out of date.

The system may not detect and read speed limit signs with conditional information, for example, when a sign is flashing, during specific time ranges, or when children are present.

Note: *The system does not set the vehicle speed to speed limits shown with a supplementary traffic sign.*

Under certain conditions, the system may not adjust the vehicle speed until after your vehicle passes the speed limit.

Note: *the system will not work as intended in non-navigation markets.*

SWITCHING INTELLIGENT MODE ON AND OFF

1. From the settings menu, press Driver Assistance. See **Center Display** (page 599).
2. Press Cruise Control.
3. Press Adaptive Cruise Control.
4. Press Speed Sign Recognition.

INTELLIGENT ADAPTIVE CRUISE CONTROL ALERTS

If you increase the set speed beyond the speed limit or speed limit plus a positive tolerance value, the set speed indicator flashes.

The warning does not occur if:

- You override the set speed using the accelerator pedal.
- The vehicle speed exceeds the set speed due to being on a downhill slope.

Ranger (TRA, TRB) Vehicles Built From: 01-11-2024, CG4010en enGBR, Edition date: 202407, DOM

INTELLIGENT ADAPTIVE CRUISE CONTROL INDICATORS

A blue circle appears around the detected speed limit in the instrument cluster.

INTELLIGENT ADAPTIVE CRUISE CONTROL – TROUBLESHOOTING

INTELLIGENT ADAPTIVE CRUISE CONTROL – INFORMATION MESSAGES

Note: *Depending on your vehicle options and instrument cluster type, not all messages display or are available.*

Note: *Certain messages may be abbreviated or shortened depending upon which cluster type you have.*

Message	Details
Adaptive Cruise Control Predictive Speed Assist not available	Conditions exist preventing the system from being available. Check that the front windshield camera and adaptive cruise control radar sensor are not blocked. Navigation system information may not be available. If the message continues to appear, have your vehicle checked as soon as possible.

ADAPTIVE CRUISE CONTROL – TROUBLESHOOTING

ADAPTIVE CRUISE CONTROL – INFORMATION MESSAGES - VEHICLES WITH: STOP AND GO

Note: *Depending on your vehicle options and instrument cluster type, not all messages display or are available.*

Note: *The system could abbreviate or shorten certain messages depending upon which cluster type you have.*

Message	Details
Adaptive cruise malfunction	A malfunction is preventing the adaptive cruise from engaging.
Front sensor not aligned	Contact an authorized dealer to have the radar checked for proper coverage and operation.
Adaptive cruise not available	Conditions exist preventing the system from being available.
Adaptive cruise not available Sensor blocked See manual	You have a blocked radar because of poor radar visibility due to inclement weather or ice, mud, or water in front of the sensor. You can typically clean the sensor to resolve this issue. Due to the nature of sensor technology, it is possible to get a blockage warning with no actual block. This happens, for example, when driving in sparse rural or desert environments. A false blocked condition either self clears, or clears after you restart your vehicle.
Cruise control active Adaptive braking off	You have selected normal cruise control. The system does not brake or react to traffic.
Adaptive cruise Driver resume control	Displays when the adaptive cruise control is going to cancel and you must take control.
Adaptive cruise Speed too low to activate	Displays when the vehicle speed is too slow to activate the adaptive cruise control and there is no lead vehicle in range.

WHAT IS DRIVE MODE CONTROL

The system delivers a driving experience through a suite of sophisticated electronic vehicle systems. These systems optimize steering, handling and powertrain response. This provides a single location to control multiple systems performance settings.

Changing the drive mode changes the functionality of the following systems:

- Electric power-assisted steering system adjusts steering effort and feel based on the mode you select. See **How Does Electric Power Steering Work** (page 304).
- Electronic stability control and traction control maintain your vehicle control in adverse conditions or high performance driving. See **Stability Control** (page 293).
- Electronic throttle control enhances the powertrain response to your driving inputs.
- Transmission controls become optimized with shift schedules tuned to each mode.
- Four-wheel drive settings are optimized and tuned to each mode.
- Electric vehicle mode selections may be limited.

The system tailors your vehicle configuration for each mode you select.

Note: *Not all settings may be available.*

Note: *The system has diagnostic checks that continuously monitor the system for proper operation. If a mode is unavailable due to a system fault or change in gear shifter position, the mode defaults to Normal.*

SELECTING A DRIVE MODE

EV Drive Mode Selection

Press the button on the center console. The first press activates the drive mode selection menu in the display. Subsequent presses change the selected drive mode. See **Plug-In Hybrid Electric Vehicle Drive Modes** (page 336).

Note: *Button icons vary depending on the vehicle.*

Non-EV Drive Mode Selection

Rotate the drive mode control on the center console to select or change a drive mode. See **Drive Modes** (page 339).

Note: *Button icons vary depending on the vehicle.*

PLUG-IN HYBRID ELECTRIC VEHICLE DRIVE MODES

AUTO EV

This mode provides an automatic use of high voltage battery power during the drive, staying in electric mode when possible and running the engine when needed.

EV CHARGE

This mode uses your vehicle's engine to charge the high voltage battery versus plugging the vehicle into a utility grid.

The electric range gained through the EV Charge allows you to switch to Auto EV or EV Now for full electric operation later in your drive. The battery cannot completely charge to 100% when in EV Charge mode. This is to allow for full operation of the regenerative braking system. When the battery reaches its EV Charge limit, the vehicle remains in EV Charge mode and maintains that charge level, until you select another EV Mode, or until you switch your vehicle off.

When you enable EV Charge, a white EV Charge icon appears in the information display.

EV Charge resets to Auto EV when you switch off your vehicle. You may select EV Charge again during your next drive.

EV LATER

In EV Later, your vehicle runs on the engine as needed and saves most of the available electric range for later use in Auto EV or EV Now mode.

For example, your initial drive is at high speeds on open roads, but later your drive is at low speeds in an urban area where electric only driving is most efficient. In this case, you can select EV Later for the higher speed portion of your trip and then select Auto EV or EV Now for the urban portion.

When you enable EV Later, a white EV Later icon appears in the information display. EV Later resets to Auto EV when you switch off your vehicle. You may select EV Later again during your next drive.

When you select EV Later with the vehicle fully charged or near fully charged, some electric-only driving range is used to discharge the battery. This is to allow for full operation of the regenerative braking system.

EV NOW

This mode provides an electric only driving experience.

Do not use EV Now when towing a trailer. The electric drive system is not designed for towing.

Your vehicle could accelerate slower and the top speed could be lower than when in Auto EV mode.

Ranger (TRA, TRB) Vehicles Built From: 01-11-2024, CG4010en enGBR, Edition date: 202407, DOM

You can enable your engine at any time by using one of the following methods:

- Fully press the accelerator pedal. A pop-up message appears. Press the OK button on the steering wheel to enable the engine. When the engine is no longer needed, your vehicle returns to EV Now. The message disappears if you release the accelerator pedal.
- Select a different EV mode. This exits EV Now mode and permits engine operation. To return to EV Now mode, select it again.

Your vehicle could enter Engine Enabled mode if system conditions require it. A message displays if this occurs. This is a normal function of the system and your vehicle returns to EV Now mode when possible.

When you enable EV Now mode, a blue EV Now icon appears in the information display. If your vehicle is in Engine Enabled mode, the EV Now icon is amber. EV Now exits when your available electric range reaches zero.

Note: *In certain vehicles, cabin air heating is not available in EV Now mode, only heated seats and heated steering wheel.*

PLUG-IN HYBRID ELECTRIC VEHICLE DRIVE MODES – TROUBLESHOOTING

PLUG-IN HYBRID ELECTRIC VEHICLE DRIVE MODES – INFORMATION MESSAGES

Message	Description
Engine enabled due to defrost setting	Your vehicle enables the engine due to the climate control defrost setting. This is normal operation.
Press EV button for full defrost	Press the EV button and select either EV Later or EV Auto to enable full defrost. The engine may run to provide more cabin heat.
Engine enabled for system performance	Your vehicle enables the engine for system performance. This is normal operation.
Press OK to enable engine	You can press OK to enable the engine temporarily for increased performance when in EV Now mode.

WHAT IS DRIVE MODE CONTROL

Your vehicle has various drive modes that you can select for different driving conditions. Depending on the drive mode that you select, the system adjusts various vehicle settings.

HOW DOES DRIVE MODE CONTROL WORK

Drive mode control adjusts your vehicle configuration for each mode you select.

Changing the drive mode adjusts the steering effort and feel of the steering system.

The stability and traction control assist your vehicle control in adverse conditions or high-performance driving.

Throttle control enhances the powertrain response, transmission controls become optimized with shift schedules, and four-wheel drive settings are optimized and tuned to each mode.

Changing the drive mode can engage or disengage the electronic locking differentials.

Changing the drive mode changes the four-wheel drive mode to the default setting for the selected drive mode.

Note: *The system has diagnostic checks that continuously monitor the system for proper operation. If a mode is unavailable due to a system fault, the drive mode system defaults to normal. When the system defaults to normal, the driveline settings remain the same as prior to the system fault.*

Note: *Your vehicle reverts to normal mode each time it is started.*

SELECTING A DRIVE MODE - VEHICLES WITH: PUSH BUTTON SELECTABLE DRIVE MODES

Press the button on the center console. The first press activates the drive mode selection menu in the display. Subsequent presses change the selected drive mode.

Note: *Button icons vary depending on the vehicle.*

Note: *Mode changes are not available when your vehicle is off or when the transmission is in reverse (R).*

SELECTING A DRIVE MODE - VEHICLES WITH: ROTARY SELECTABLE DRIVE MODES

Rotate the drive mode control on the center console to select or change a drive mode.

Note: *Button icons vary depending on the vehicle.*

DRIVE MODES

ECO

For efficient driving. This mode helps deliver maximum fuel efficiency and helps to increase driving range.

Depending on your vehicle options, four-wheel drive auto (4A) or two-wheel drive high (2H) is the default four-wheel drive mode. Four-wheel drive low (4L) is not selectable in eco mode.

The rear electronic locking differential is available below 40 km/h (25 mph).

MUD/RUTS

For off-road driving. This mode enhances vehicle performance to traverse muddy, rutted or uneven terrains.

Four-wheel drive high (4H) is the default four-wheel drive mode. Four-wheel drive low (4L) is selectable in mud/ruts mode. Depending on your vehicle options, four-wheel drive auto (4A) or two-wheel drive high (2H) is not selectable in mud/ruts mode.

The rear electronic locking differential is engaged when in mud/ruts mode and is available at any speed in all selectable four-wheel drive modes.

Note: *Do not use this mode on dry, hard pavement. This could produce some vibration, driveline bind up, and potential excessive tire and vehicle wear depending on the four-wheel drive mode selection.*

NORMAL

For everyday driving. This mode is the perfect balance of excitement, comfort and convenience. This is the default mode after each ignition cycle, the driveline settings remain the same prior to the ignition cycle.

Depending on your vehicle options, four-wheel drive auto (4A) or two-wheel drive high (2H) is the default four-wheel drive mode. All four-wheel drive modes are selectable when in normal mode.

The rear electronic locking differential is available below 40 km/h (25 mph).

Note: *The rear electronic locking differential is available at any speed when in four-wheel drive low (4L).*

Ranger (TRA, TRB) Vehicles Built From: 01-11-2024, CG4010en enGBR, Edition date: 202407, DOM

SAND

For off-road driving on soft, dry sand or deep snow. This mode may help get your vehicle unstuck from deep snow or sand.

Four-wheel drive high (4H) is the default four-wheel drive mode. Four-wheel drive low (4L) is selectable in sand mode. Depending on your vehicle options, four-wheel drive auto (4A) or two-wheel drive high (2H) is not selectable in sand mode.

The rear electronic locking differential is engaged when in sand mode and is available at any speed in all selectable four-wheel drive modes.

Note: *Do not use this mode on dry, hard pavement. This could produce some vibration, driveline bind up, and potential excessive tire and vehicle wear depending on the four-wheel drive mode selection.*

Note: *Sand mode is not intended for use on firm, slippery surfaces, such as paved roads covered with snow or ice. For slippery, firm surfaces use slippery mode.*

SLIPPERY

For less than ideal conditions such as snow or ice. This mode can be used for crossing terrain where a firm surface is covered with loose or slippery material. Slippery mode lowers throttle response and optimizes shifting for slippery surfaces.

Depending on your vehicle options, four-wheel drive auto (4A) or four-wheel drive high (4H) is the default four-wheel drive mode. When Four-wheel drive auto (4A) is the default, two-wheel drive high (2H) is not available.

The rear electronic locking differential is available below 40 km/h (25 mph).

Note: *The rear electronic locking differential is available at any speed when in four-wheel drive low (4L).*

Note: *Do not use this mode on hard pavement while in four-wheel drive high (4H) or four-wheel drive low (4L). This could produce some vibration, driveline bind up, and potential excessive tire and vehicle wear depending on the four-wheel drive mode selection.*

TOW/HAUL

For improved transmission operation when towing a trailer or a heavy load. This mode moves upshifts to higher engine speeds to reduce the frequency of transmission shifting. This mode also provides engine braking in all forward gears, which slows your vehicle and assists you in controlling your vehicle when descending a slope. The amount of downshift braking provided varies based on the amount you press the brake pedal.

Four-wheel drive auto (4A) is the default four-wheel drive mode when four-wheel drive auto (4A) is available, otherwise this mode does not default to a certain four-wheel drive mode and maintains the previous selection. All four-wheel drive modes are selectable when in tow/haul.

The system tunes the steering to enhance driving comfort when towing or carrying heavy loads.

The rear electronic locking differential is available below 40 km/h (25 mph).

Note: *The rear electronic locking differential is available at any speed when in four-wheel drive low (4L).*

DRIVE MODE CONTROL – TROUBLESHOOTING

DRIVE MODE CONTROL – WARNING LAMPS

Some drive modes reduce traction and stability control performance and the indicator illuminates in the instrument cluster.

Note: *The system has diagnostic checks that continuously monitor the system for proper operation. If a mode is unavailable due to a system fault, the drive mode system defaults to normal. When the system defaults to normal, the driveline settings remain the same as prior to the system fault.*

DRIVE MODE CONTROL – INFORMATION MESSAGES

Message	Details
Selected 4x4 mode not available in current drive mode	You have selected a four-wheel drive mode that is not available in the current drive mode. Select an available four-wheel drive mode.

DRIVE MODE CONTROL – FREQUENTLY ASKED QUESTIONS

Why did the system default to normal mode?

- If a mode is unavailable due to a system fault, it defaults to normal mode and the driveline settings remain the same as prior to the system fault.

Can I switch drive modes while I am driving?

- In most instances, you can switch drive modes while you are driving (if you maintain attention on the road), or while the vehicle is stationary. However, you should not switch the vehicle into a drive mode intended for off-road or track use while driving on paved, public roads. For example, while driving on a paved highway, it would be acceptable to switch from normal mode to eco mode, but not to off-road mode.

How long does it take for the vehicle to switch modes after I make a selection?

- After switching modes, the new drive mode will activate within several seconds, if all the appropriate pre-conditions are met.

How should I decide which drive mode to use?

- Selecting a drive mode usually depends on the driving experience you would like to have, and the driving conditions. For example, if you want to have a more exciting on-road driving experience, you could switch into sport mode. If you find yourself driving on slick roads, you could switch into slippery mode.

Will drive modes impact my vehicle's fuel consumption?

- Drive modes can have an impact on your vehicle's fuel consumption. In addition to the active mode, your driving style will also affect the fuel consumption.

WHAT IS DRIVE MODE CONTROL

Your vehicle has various drive modes that you can select for different driving conditions. Depending on the drive mode that you select, the system adjusts various vehicle settings.

HOW DOES DRIVE MODE CONTROL WORK

Drive mode control adjusts your vehicle configuration for each mode you select.

Changing the drive mode adjusts the steering effort and feel of the steering system.

The stability and traction control assist your vehicle control in adverse conditions or high-performance driving.

Throttle control enhances the powertrain response, transmission controls become optimized with shift schedules, and four-wheel drive settings are optimized and tuned to each mode.

Changing the drive mode can engage or disengage the electronic locking differentials.

Changing the drive mode changes the four-wheel drive mode to the default setting for the selected drive mode.

Note: *The system has diagnostic checks that continuously monitor the system for proper operation. If a mode is unavailable due to a system fault, the drive mode system defaults to normal. When the system defaults to normal, the driveline settings remain the same as prior to the system fault.*

Note: *Your vehicle reverts to normal mode each time it is started.*

SELECTING A DRIVE MODE

Rotate the drive mode control on the center console to select or change a drive mode.

Note: *Button icons vary depending on the vehicle.*

Selecting a Steering Mode

To change the steering feel, press the button on the steering wheel. The first press displays a pop-up message in the instrument cluster display of the selected mode and subsequent presses changes the selected mode.

Modes:

- Normal – Developed to complement vehicle response during daily driving.
- Sport – Slightly less assist and damping for improved steering feel during spirited driving.
- Comfort – Slightly more assist for driver preference and daily driving ease.

Ranger (TRA, TRB) Vehicles Built From: 01-11-2024, CG4010en enGBR, Edition date: 202407, DOM

After selecting the desired setting, you may feel a soft feedback bump in the steering wheel when the changeover occurs.

Note: *If you disconnect or remove the battery, the steering system defaults to normal.*

Selecting a Suspension Mode

To change the suspension feel, press the button on the steering wheel. The first press displays a pop-up message in the instrument cluster display of the selected mode and subsequent presses changes the selected mode.

Modes:

- Normal – Developed to complement vehicle response during daily driving.
- Sport – Slightly firmer suspension with emphasis on handling and control.
- Off-road – Maximizes suspension performance in extreme off-road environments.

Selecting an Exhaust Mode

To change the exhaust sound, press the button on the steering wheel. The first press displays a pop-up message in the instrument cluster display of the selected mode and subsequent presses changes the selected mode.

Modes:

- Normal – Default setting provides a balance of comfort and feedback.
- Sport – Slightly louder than normal for spirited driving.
- Baja – Loudest setting for off-road use only. Maximum exhaust noise under all driving conditions.
- Quiet – Quietest setting for maximum comfort under all driving conditions.

Quiet Start

Quiet start allows you to schedule when the exhaust mode turns on the quiet setting. The time window can be from 1 to 24 hours

Enabling and disabling quiet start:

1. Press Settings.
2. Press Vehicle.
3. Press Quiet Start.
4. Press Quiet Start.
5. Press Settings.

Setting quiet time:

1. Press Settings.
2. Press Vehicle.
3. Press Quiet Start.
4. Press Set Quiet Time.
5. Set your desired start and end times.

MyMode

You can use MyMode to create one custom vehicle configuration based on the current state of your vehicle.

When you have your vehicle configured to your desired settings, press and hold the button for a few seconds to save as MyMode.

Press the button twice to activate your saved MyMode.

You can check the saved MyMode settings with a single press of the button.

You can save the following settings as MyMode:

- Drive mode.
- Steering mode.
- Suspension mode.
- Exhaust mode.
- Four-wheel drive mode.

- Stop and start on or off.
- Rear electronic locking differential on or off.

Note: *MyMode can only be set with configurations that are available for each drive mode. See* ***Drive Modes*** *(page 339).*

Note: *You can save or view MyMode at any time, regardless of your vehicle's speed or transmission selection, as long as your vehicle is running and it meets system conditions.*

Note: *When activating MyMode, your vehicle must meet all preconditions for the drive mode and various settings before it activates. A message appears if it does not meet system conditions.*

DRIVE MODES

BAJA

For high speed off-road driving. Baja mode optimizes the throttle control for better response and torque delivery.

Four-wheel drive high (4H) is the default four-wheel drive mode. Four-wheel drive auto (4A) is not selectable in baja mode.

The front electronic locking differential is available below 40 km/h (25 mph) when in four-wheel drive low (4L). The rear electronic locking differential is available at any speed in all selectable four-wheel drive modes.

Note: *Do not use this mode on dry, hard pavement. This could produce some vibration, driveline bind up, and potential excessive tire and vehicle wear depending on the four-wheel drive mode selection.*

MUD/RUTS

For off-road driving. This mode enhances vehicle performance to traverse muddy, rutted or uneven terrains.

Four-wheel drive high (4H) is the default four-wheel drive mode. Four-wheel drive low (4L) is selectable in mud/ruts mode. Two-wheel drive high (2H) or four-wheel drive auto (4A) is not selectable in mud/ruts mode.

The front electronic locking differential is available below 40 km/h (25 mph) when in four-wheel drive low (4L). The rear electronic locking differential is engaged when in mud/ruts mode and is available at any speed in all selectable four-wheel drive modes.

Note: *Do not use this mode on dry, hard pavement. This could produce some vibration, driveline bind up, and potential excessive tire and vehicle wear depending on the four-wheel drive mode selection.*

NORMAL

For everyday driving. This mode is the perfect balance of excitement, comfort and convenience. This is the default mode after each ignition cycle, the driveline settings remain the same prior to the ignition cycle.

Four-wheel drive auto (4A) is the default four-wheel drive mode. All four-wheel drive modes are selectable when in normal mode.

The front electronic locking differential is available below 40 km/h (25 mph) when in four-wheel drive low (4L). The rear electronic locking differential is available below 40 km/h (25 mph).

Ranger (TRA, TRB) Vehicles Built From: 01-11-2024, CG4010en enGBR, Edition date: 202407, DOM

Note: *The rear electronic locking differential is available at any speed when in four-wheel drive low (4L).*

ROCK CRAWL

For off-road driving and optimum rock climbing. Rock crawl mode optimizes throttle response and adjusts transmission shift points to provide additional control of your vehicle.

Four-wheel drive low (4L) is the only four-wheel drive mode available in rock crawl mode.

Comfort is the default steering mode. All steering modes are available.

Off-road is the default suspension mode. All suspension modes are available.

Normal is the default exhaust mode. All exhaust modes are available.

The front electronic locking differential is available below 40 km/h (25 mph) when in four-wheel drive low (4L). The rear electronic locking differential is engaged when in rock crawl mode and is available at any speed.

SAND

For off-road driving on soft, dry sand or deep snow. This mode may help get your vehicle unstuck from deep snow or sand.

Four-wheel drive high (4H) is the default four-wheel drive mode. Four-wheel drive low (4L) is selectable in sand mode. Two-wheel drive high (2H) or four-wheel drive auto (4A) is not selectable in sand.

The front electronic locking differential is available below 40 km/h (25 mph) when in four-wheel drive low (4L). The rear electronic locking differential is engaged when in sand mode and is available at any speed in all selectable four-wheel drive modes.

Note: *Do not use this mode on dry, hard pavement. This could produce some vibration, driveline bind up, and potential excessive tire and vehicle wear depending on the four-wheel drive mode selection.*

Note: *Sand mode is not intended for use on firm, slippery surfaces, such as paved roads covered with snow or ice. For slippery, firm surfaces use slippery mode.*

SLIPPERY

For less than ideal conditions such as snow or ice. This mode can be used for crossing terrain where a firm surface is covered with loose or slippery material. Slippery mode lowers throttle response and optimizes shifting for slippery surfaces.

Four-wheel drive auto (4A) is the default four-wheel drive mode. Two-wheel drive high (2H) is not available.

The front electronic locking differential is available below 40 km/h (25 mph) when in four-wheel drive low (4L). The rear electronic locking differential is available below 40 km/h (25 mph).

Note: *The rear electronic locking differential is available at any speed when in four-wheel drive low (4L).*

Note: *Do not use this mode on hard pavement while in four-wheel drive high (4H) or four-wheel drive low (4L). This could produce some vibration, driveline bind up, and potential excessive tire and vehicle wear depending on the four-wheel drive mode selection.*

SPORT

For sporty driving with improved performance handling and response. This mode increases accelerator pedal response and provides a sportier steering feel. The powertrain system holds onto lower gears longer, helping your vehicle accelerate faster.

Four-wheel drive auto (4A) is the default four-wheel drive mode. Four-wheel drive low (4L) is not selectable in sport mode.

The front electronic locking differential is not available in sport mode. The rear electronic locking differential is available below 40 km/h (25 mph).

DRIVE MODE CONTROL – TROUBLESHOOTING

DRIVE MODE CONTROL – WARNING LAMPS

Some drive modes reduce traction and stability control performance and the indicator illuminates in the instrument cluster.

Note: *The system has diagnostic checks that continuously monitor the system for proper operation. If a mode is unavailable due to a system fault, the drive mode system defaults to normal. When the system defaults to normal, the driveline settings remain the same as prior to the system fault.*

DRIVE MODE CONTROL – INFORMATION MESSAGES

Message	Details
Selected 4x4 mode not available in current drive mode	You have selected a four-wheel drive mode that is not available in the current drive mode. Select an available four-wheel drive mode.

DRIVE MODE CONTROL – FREQUENTLY ASKED QUESTIONS

Why did the system default to normal mode?

- If a mode is unavailable due to a system fault, it defaults to normal mode and the driveline settings remain the same as prior to the system fault.

Can I switch drive modes while I am driving?

- In most instances, you can switch drive modes while you are driving (if you maintain attention on the road), or while the vehicle is stationary. However, you should not switch the vehicle into a drive mode intended for off-road or track use while driving on paved, public roads. For example, while driving on a paved highway, it would be acceptable to switch from normal mode to eco mode, but not to off-road mode.

How long does it take for the vehicle to switch modes after I make a selection?

- After switching modes, the new drive mode will activate within several seconds, if all the appropriate pre-conditions are met.

How should I decide which drive mode to use?

- Selecting a drive mode usually depends on the driving experience you would like to have, and the driving conditions. For example, if you want to have a more exciting on-road driving experience, you could switch into sport mode. If you find yourself driving on slick roads, you could switch into slippery mode.

Will drive modes impact my vehicle's fuel consumption?

- Drive modes can have an impact on your vehicle's fuel consumption. In addition to the active mode, your driving style will also affect the fuel consumption.

WHAT IS ECO COACH

Eco coach is designed to monitor certain driving characteristics to help you drive more efficiently.

HOW DOES ECO COACH WORK

Eco coach provides feedback through the instrument cluster display about your driving behaviour.

Note: *The efficiency levels do not result in a defined fuel consumption figure.*

Note: *The system only indicates the efficiency level for the current trip. The system resets each time you switch the ignition on.*

HOW DOES INSTANTANEOUS EFFICIENCY LEVEL WORK

The display ring increases as the instantaneous efficiency level increases and illuminates when it reaches maximum efficiency. The level continuously updates to indicate the efficiency level for the current trip.

VIEWING THE INSTANTANEOUS EFFICIENCY LEVEL

1. Using the information display controls on the steering wheel, select ***MyView***.
2. Select ***Eco coach***.

HOW DOES TRIP SUMMARY WORK

The calculated trip summary is shown as four percentage values. The percentage values increase as the calculated efficiency levels increase. The percentage values indicate the average efficiency level for acceleration, deceleration, speed and gear shifting during the total distance traveled by your vehicle for the current trip.

How to improve your efficiency:

- Acceleration: Light to moderate acceleration improves your score.
- Braking: We recommend slow and steady braking.
- Speed: Maintain reasonable vehicle speeds for best scores.
- Gear shifting: Shifting the gears at the right moment improves your score.
- Compliance: Follow the recommendations to improve your score.

Note: *Vehicles with an automatic transmission do not have a percentage value for gear shifting.*

VIEWING THE TRIP SUMMARY

1. Using the information display controls on the steering wheel, select ***MyView***.
2. Select ***Eco coach***.

Ranger (TRA, TRB) Vehicles Built From: 01-11-2024, CG4010en enGBR, Edition date: 202407, DOM

WHAT IS LOCAL HAZARD INFORMATION

The system is designed to provide near real-time information about the road in front of you.

LOCAL HAZARD INFORMATION PRECAUTIONS

WARNING: You are responsible for controlling your vehicle at all times. The system is designed to be an aid and does not relieve you of your responsibility to drive with due care and attention. Failure to follow this instruction could result in the loss of control of your vehicle, personal injury or death.

LOCAL HAZARD INFORMATION INDICATORS

Animals on the road.

Approaching vehicle coming the wrong way.

Broken down vehicle or accident.

Broken down vehicle or accident.

Fire.

General.

Hazardous driving conditions.

Objects on the road.

People on the road.

Road works.

Traffic jam.

Note: *Depending on your vehicle options and instrument cluster type, not all indicators shown are available.*

ENABLING LOCAL HAZARD INFORMATION

Note: *Make sure that the modem is enabled. See* ***Enabling and Disabling the Modem*** *(page 590).*

1. From the settings menu, press Connectivity. See **Center Display** (page 599).
2. Press Connected Vehicle Features.
3. Switch Local Hazard Information on.

CHECKING LOCAL HAZARD INFORMATION STATUS

1. Use the instrument cluster display controls to navigate to the main menu.
2. Select ***Trip computer***.
3. Select ***Local Hazard Information***.

HOW DOES THE SPEED LIMITER WORK

The system allows you to set a speed to which your vehicle becomes limited. The set speed sets the effective maximum speed of your vehicle. You can temporarily exceed the set speed if required, for example to overtake.

The controls are on the steering wheel.

SPEED LIMITER PRECAUTIONS

WARNING: When you are going downhill, your vehicle speed may increase above the set speed. The system will not apply the brakes but a warning displays. Failure to follow this warning could result in serious personal injury or death.

WARNING: You are responsible for controlling your vehicle at all times. The system is designed to be an aid and does not relieve you of your responsibility to drive with due care and attention. Failure to follow this instruction could result in the loss of control of your vehicle, personal injury or death.

SWITCHING THE SPEED LIMITER ON AND OFF

Press to switch the system on.

The system activates with the current vehicle speed as the set speed. Press again to switch the system off.

SETTING THE SPEED LIMIT

Press with the limiter in standby mode to set the limiter to the current vehicle speed. Speed limitation activates and the symbol in the instrument cluster appears green.

CHANGING THE SET SPEED LIMIT

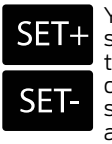

You can adjust the set speed in small or large increments. Press the toggle button upward or downward once to adjust the set speed in small increments. Press and hold the toggle button upward or downward to adjust the set speed in large increments.

CANCELING THE SET SPEED LIMIT

Press to cancel the limiter and place it in standby mode. The symbol in the instrument cluster appears grey.

RESUMING THE SET SPEED LIMIT

Press again to resume the limiter. The symbol in the instrument cluster appears green.

Ranger (TRA, TRB) Vehicles Built From: 01-11-2024, CG4010en enGBR, Edition date: 202407, DOM

INTENTIONALLY EXCEEDING THE SET SPEED LIMIT

Firmly press the accelerator to temporarily turn the system off. The system reactivates once your vehicle speed drops below the set speed.

SPEED LIMITER INDICATORS

It illuminates in the instrument cluster when the system is standby or active.

SPEED LIMITER AUDIBLE WARNINGS

If you accidently exceed the set speed, the set speed indicator flashes and an audible warning tone sounds.

If you intentionally exceed the set speed, only the set speed indicator flashes.

WHAT IS THE INTELLIGENT SPEED LIMITER

The system allows you to limit the vehicle speed to the maximum speed limit detected by the traffic sign recognition system.

HOW DOES THE INTELLIGENT SPEED LIMITER WORK

Intelligent speed limiter uses data from the traffic sign recognition system to set a maximum speed. For example, if the traffic sign recognition system detects a 80 km/h (50 mph) speed limit, the vehicle speed is limited to 80 km/h (50 mph).

INTELLIGENT SPEED LIMITER PRECAUTIONS

WARNING: When you are going downhill, your vehicle speed may increase above the set speed. The system will not apply the brakes but a warning displays. Failure to follow this warning could result in serious personal injury or death.

WARNING: You are responsible for controlling your vehicle at all times. The system is designed to be an aid and does not relieve you of your responsibility to drive with due care and attention. Failure to follow this instruction could result in the loss of control of your vehicle, personal injury or death.

Note: *The system does not limit your vehicle's speed to speed limits shown with a supplementary traffic sign.*

SWITCHING THE INTELLIGENT SPEED LIMITER ON AND OFF

LIM

Press to switch the system on. The system activates with the detected speed limit or, if no speed limit is detected the current speed of your vehicle is set. Press again to switch the system off.

SETTING THE SPEED LIMIT

SET+

SET-

Press the toggle button upward or downward with the system in standby mode to set the speed limiter to the current vehicle speed. The set speed is stored and displayed in the instrument cluster.

Note: *The set speed limiter adjusts when the system detects a different maximum speed limit.*

Note: *If the system cannot detect a maximum speed limit, the system returns to standby mode.*

CHANGING THE SET SPEED LIMIT

SET+

SET-

You can adjust the set speed in small or large increments. Press the toggle button upward or downward once to adjust the set speed in small increments. Press and hold the toggle button upward or downward to adjust the set speed in large increments.

Ranger (TRA, TRB) Vehicles Built From: 01-11-2024, CG4010en enGBR, Edition date: 202407, DOM

CANCELING THE SET SPEED LIMIT

Press to cancel the limiter and place it in standby mode. The symbol in instrument cluster display appears grey.

RESUMING THE SET SPEED LIMIT

Press to resume the limiter. The system sets the speed limit to the detected maximum speed limit when it resumes. The symbol in the instrument cluster display appears green.

INTENTIONALLY EXCEEDING THE SET SPEED LIMIT

Firmly press the accelerator pedal to temporarily turn the system off. The system reactivates once your vehicle speed drops below the set speed.

INTELLIGENT SPEED LIMITER INDICATORS

It illuminates in the instrument cluster when the system is in standby or active.

INTELLIGENT SPEED LIMITER AUDIBLE WARNINGS

A warning appears in the instrument cluster and a tone sounds if any of the following occur:

- Your vehicle's speed exceeds the current set speed.
- The system detects a maximum speed limit that is lower than your vehicle's current speed. A tone sounds when your vehicle speed remains above the speed limit for 30 seconds.
- You intentionally exceed the set speed.

If the traffic sign recognition system detects a speed limit outside the operational speed range, 24–182 km/h (15–113 mph), a single warning tone sounds and the system switches to standby mode.

SWITCHING FROM INTELLIGENT SPEED LIMITER TO SPEED LIMITER

1. From the settings menu, press Driver Assistance. See **Center Display** (page 599).
2. Press Speed Limit Assist.
3. Switch Intelligent Speed Limiter off.

Note: *If you switch intelligent speed limiter off, the system defaults to manual speed limiter. You can manually set the speed limiter using the controls on the steering wheel.*

Ranger (TRA, TRB) Vehicles Built From: 01-11-2024, CG4010en enGBR, Edition date: 202407, DOM

INTELLIGENT SPEED LIMITER – TROUBLESHOOTING

INTELLIGENT SPEED LIMITER – FREQUENTLY ASKED QUESTIONS

Why does a warning appear in the instrument cluster display?

- The vehicle speed exceeds the current set speed.
- The system detects a maximum speed limit that is lower than the current vehicle speed.
- You intentionally exceed the set speed.

WHAT IS THE LANE KEEPING SYSTEM

The lane keeping system alerts you by providing temporary steering assistance or steering wheel vibration when it detects an unintended lane departure.

HOW DOES THE LANE KEEPING SYSTEM WORK

The lane keeping system uses a forward looking camera mounted on the windshield to monitor vehicle movement within the lane of travel.

When the camera detects a drift out of the lane of travel, the lane keeping system alerts the driver by vibrating the steering wheel, or aids the driver by providing a small steering input to move the vehicle back into the lane of travel.

The driver can select one of three modes:

- Alert (if equipped)
- Aid
- Alert + Aid

LANE KEEPING SYSTEM PRECAUTIONS

WARNING: You are responsible for controlling your vehicle at all times. The system is designed to be an aid and does not relieve you of your responsibility to drive with due care and attention. Failure to follow this instruction could result in the loss of control of your vehicle, personal injury or death.

WARNING: The system will not operate if the sensor cannot track the road lane markings.

WARNING: The sensor may incorrectly track lane markings as other structures or objects. This can result in a false or missed warning.

WARNING: In cold and severe weather conditions the system may not function. Rain, snow and spray can all limit sensor performance.

WARNING: The system may not operate properly if the sensor is blocked. Keep the windshield free from obstruction.

WARNING: If damage occurs in the immediate area surrounding the sensor, have your vehicle checked as soon as possible.

WARNING: The system may not correctly operate if your vehicle is fitted with a suspension kit not approved by us.

WARNING: Large contrasts in outside lighting can limit sensor performance.

LANE KEEPING SYSTEM LIMITATIONS

The lane keeping system only operates when the vehicle speed is greater than 64 km/h (40 mph).

The system works when the camera can detect at least one lane marking or the edge of the road.

Ranger (TRA, TRB) Vehicles Built From: 01-11-2024, CG4010en enGBR, Edition date: 202407, DOM

Note: *When you select Aid or Alert and Aid mode and the system detects no steering activity for a short period of time, the system alerts you to put your hands on the steering wheel. The system may detect a light grip or touch on the steering wheel as hands-off driving.*

The lane keeping system may not correctly operate in any of the following conditions:

- The lane keeping system does not detect at least one lane marking or the edge of the road.
- You switch the turn signal on.
- You apply direct steering, accelerate fast or brake hard.
- The vehicle speed is less than 64 km/h (40 mph).
- The anti-lock brake, stability control or traction control system activates.
- The lane is too narrow.
- Something is obscuring the camera or it is unable to detect the lane markings due to environment, traffic or vehicle conditions.
- Entering or exiting a tight curve when driving at high speeds.

The lane keeping system may not correct lane positioning in any of the following conditions:

- High winds.
- Uneven road surfaces.
- Heavy or uneven loads.
- Incorrect tire pressure.

SWITCHING THE LANE KEEPING SYSTEM ON AND OFF

To activate the lane keeping system, press the button on the steering wheel.

Note: *When switching the system on or off a message appears in the instrument cluster display to show the status.*

Note: *The system defaults to ON with every key cycle.*

Note: *To change the steering wheel vibration intensity, use the lane keeping system menu in the touchscreen.*

To deactivate the lane keeping system, press the button twice. An icon appears when the system is manually disabled, or if there is a malfunction.

SWITCHING THE LANE KEEPING SYSTEM MODE

1. From the settings menu, press Driver Assistance. See **Center Display** (page 599).
2. Press Lane-Keeping System.
3. Press Lane-Keeping Mode.
4. Select a mode.

Note: *The system remembers the last setting when you start your vehicle.*

LANE KEEPING SYSTEM SETTINGS

Adjusting the Steering Wheel Vibration Intensity

1. From the settings menu, press Driver Assistance. See **Center Display** (page 599).
2. Press Lane Keeping System.
3. Press Lane Keeping Intensity.
4. Select a setting.

Note: *This setting is not available in all modes.*

Ranger (TRA, TRB) Vehicles Built From: 01-11-2024, CG4010en enGBR, Edition date: 202407, DOM

AID MODE

WHAT IS AID MODE

Aid mode provides temporary steering assistance toward the center of the lane.

HOW DOES AID MODE WORK

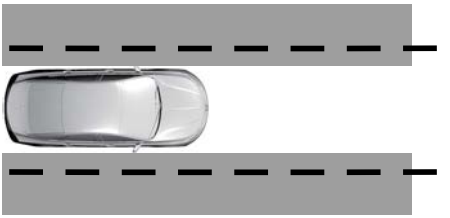

The lane keeping system aids you when an unintentional lane departure occurs. The system provides a small steering input to move the vehicle towards the center of the lane.

ALERT AND AID MODE

WHAT IS ALERT AND AID MODE

Alert and aid mode uses multiple features to keep you in your lane. The system first provides a small steering input to bring your vehicle back towards the center of the lane. If your vehicle moves too far from the center of the lane the system alerts you with vibration in the steering wheel.

HOW DOES ALERT AND AID MODE WORK

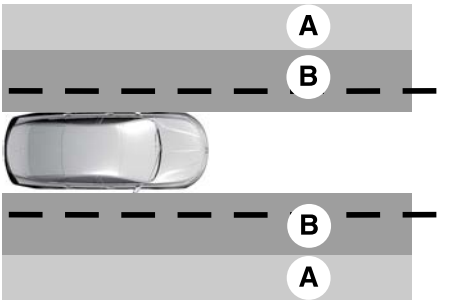

A Alert.
B Aid.

The lane keeping system detects a lane departure and provides aid when the vehicles enters **B** and applies the additional alert warning if **A** is entered.

LANE KEEPING SYSTEM INDICATORS

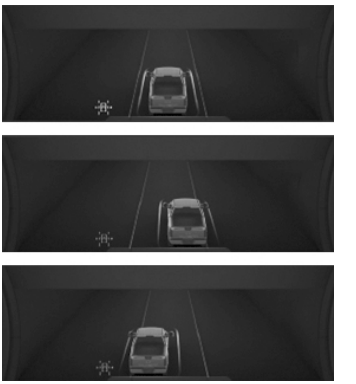

If you switch the lane keeping system on, a graphic with lane markings appears in the instrument cluster display.

When you switch the system off, the lane marking graphics do not display.

Note: *The overhead vehicle graphic may still display if adaptive cruise control is enabled.*

While the lane keeping system is on, the color of the lane markings change to indicate the system status.

Gray	White	Yellow	Red
Indicates that the system is temporarily unavailable to provide a warning or intervention on the indicated side.	Indicates that the system is available or ready to provide a warning or intervention on the indicated side.	Indicates that the system is providing or has just provided a lane keeping aid intervention.	Indicates that the system is providing or has just provided a lane keeping alert warning.

BLIND SPOT ASSIST

WHAT IS BLIND SPOT ASSIST

Blind spot assist is an extension of the lane keeping system.

It may help you identify adjacent vehicles during a lane change.

Blind spot assist provides a blind spot warning and steering assistance to help you become aware of and steer away from vehicles in your blind spot during lane changes.

HOW DOES BLIND SPOT ASSIST WORK

Activate and deactivate the system using the lane keeping system button on the steering wheel.

The blind spot assist feature is enabled whenever you select "Aid" or "Alert +Aid" from the lane keeping system.

During lane changes, the design of the blind spot assist feature detects vehicles in, or approaching, your blind spot and provides a warning, plus steering assistance to direct your vehicle back into your lane.

When active, this system functions with or without the use of turn signals and hazard flashers.

You must keep your hands on the steering wheel at all times.

BLIND SPOT ASSIST LIMITATIONS

All system limitations present in the basic lane keeping system also apply to blind spot assist.

Blind spot assist does not function under the following conditions:

- No lane markings are detected.
- One or both rear radar sensors become blocked or faulty.
- Attaching bike or cargo racks could cause false alerts due to obstruction of the sensor.

Blind spot assist may have difficulty detecting hazards under the following conditions:

- If a vehicle is approaching in an adjacent lane at a speed higher than your vehicle.
- Bad weather obstructing the sensors.

BLIND SPOT ASSIST INDICATORS

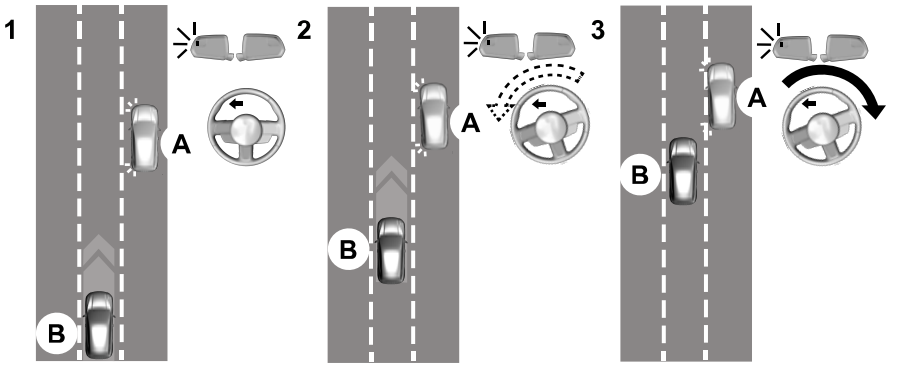

Diagram 1: Vehicle A uses its left turn signal preparing to change from the right lane to the middle lane. Vehicle B is already in the middle lane and just entered Vehicle A's blind spot causing the blind spot information system alert indicator to flash on the exterior mirror.

Diagram 2: The driver of Vehicle A begins to steer into the center lane not aware of Vehicle B.

Diagram 3: Blind spot assist counter steers to help alert the driver of Vehicle A to direct their vehicle back into the right lane to help avoid a possible collision with Vehicle B.

The lane keeping aid warning lamp or yellow lane marking in your instrument cluster display indicate blind spot assist activation. In addition, the blind spot information system alert indicator flashes on the exterior mirror on the same side as the detection. See **Blind Spot Information System** (page 367).

Blind Spot Assist Information Messages

Message	Action
Blind spot assist not available Trailer attached	Displays if you attach a trailer to your vehicle.
Blind spot assist not available Side sensor blocked	Displays if your blind spot information system sensors are blocked.
Blind Spot Assist System malfunction	The system has detected a fault that requires service. Have your vehicle checked as soon as possible.
Trailer Brake Module Malfunction	Lost communication with the trailer module. Blind spot assist is suppressed until the failure is fixed.
Trailer lighting module malfunction See manual	Lost communication with the trailer module. Blind spot assist is suppressed until the failure is fixed.
Front camera malfunction Service required	Front camera fault. Blind spot assist is disabled until the failure is fixed.

BLIND SPOT ASSIST WITH TRAILER COVERAGE

WHAT IS BLIND SPOT ASSIST WITH TRAILER COVERAGE

Blind spot assist with trailer coverage is an extension of the lane keeping system.

It may help you identify adjacent vehicles during a lane change.

Blind spot assist provides a blind spot warning and steering assistance to help you become aware of and steer away from vehicles in your blind spot during lane changes.

When attaching a trailer, ensure you have properly set up the trailer coverage settings. See **Blind Spot Information System With Trailer Coverage** (page 369).

HOW DOES BLIND SPOT ASSIST WITH TRAILER COVERAGE WORK

Activate and deactivate the system using the lane keeping system button on the steering wheel.

During lane changes, the design of the blind spot assist feature detects vehicles in, or approaching, your blind spot and provides a warning, plus steering assistance to direct your vehicle back into your lane.

If a supported trailer is connected, the function is reduced to only detecting vehicles on both sides of your vehicle and trailer, extending rearward from the exterior mirrors to the end of your trailer. See **Blind Spot Information System With Trailer Coverage** (page 369).

When active, this system functions with or without the use of direction indicators and hazard flashers.

You must keep your hands on the steering wheel at all times.

BLIND SPOT ASSIST WITH TRAILER COVERAGE LIMITATIONS

All system limitations present in the basic lane keeping system also apply to blind spot assist.

Blind spot assist does not function under the following conditions:

- No lane markings are detected.
- One or both rear radar sensors become blocked or faulty.
- You have not configured the attached trailer correctly in the trailer tow menus or you attached an unsupported trailer. The system only supports certain trailer shapes and dimensions.

Note: *Blind spot assist with trailer coverage could have reduced performance if any of the above limitations are present.*

Blind spot assist may have difficulty detecting hazards under the following conditions:

- If a vehicle is approaching in an adjacent lane at a relative speed much higher than your vehicle.
- Bad weather conditions are present that obstruct the sensors.
- Attaching bike or cargo racks could cause false alerts due to obstruction of the sensor.

BLIND SPOT ASSIST WITH TRAILER COVERAGE INDICATORS

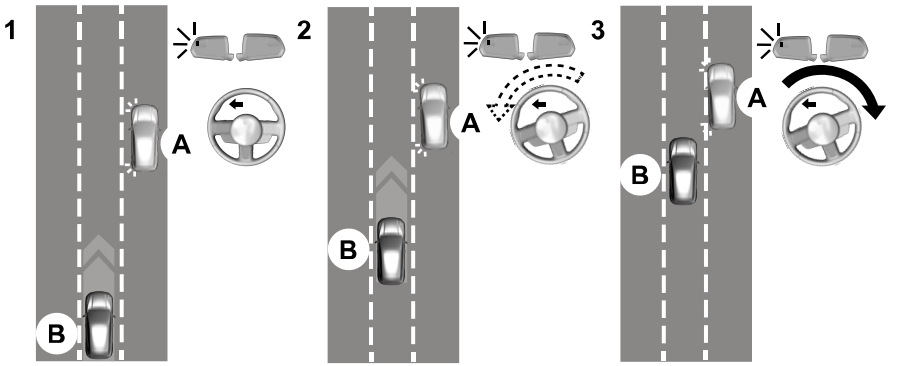

Diagram 1: Vehicle A uses its left turn signal preparing to change from the right lane to the middle lane. Vehicle B is already in the middle lane and just entered Vehicle A's blind spot causing the blind spot information system alert indicator to flash on the exterior mirror.

Diagram 2: The driver of Vehicle A begins to steer into the center lane not aware of Vehicle B.

Diagram 3: Blind spot assist counter steers to help alert the driver of Vehicle A to direct their vehicle back into the right lane to help avoid a possible collision with Vehicle B.

The lane keeping aid warning lamp or yellow lane marking in your instrument cluster display indicate blind spot assist activation. In addition, the blind spot information system alert indicator flashes on the exterior mirror on the same side as the detection. See **Blind Spot Information System** (page 367).

Blind Spot Assist Information Messages

Message	Action
Blind spot assist not available Trailer attached	Displays if you attach a trailer to your vehicle with the blind spot information system switched off or you have not configured the trailer.
Blind spot assist not available Side sensor blocked	Displays if your blind spot information system sensors are blocked.
Blind Spot Assist System malfunction	The system has detected a fault that requires service. Have your vehicle checked as soon as possible.
Trailer Brake Module Malfunction	Lost communication with the trailer module. Blind spot assist is disabled until the failure is fixed.
Trailer lighting module malfunction See manual	Lost communication with the trailer module. Blind spot assist is disabled until the failure is fixed.
Front camera malfunction Service required	Front camera fault. Blind spot assist is disabled until the failure is fixed.

Ranger (TRA, TRB) Vehicles Built From: 01-11-2024, CG4010en enGBR, Edition date: 202407, DOM

LANE KEEPING SYSTEM – TROUBLESHOOTING

LANE KEEPING SYSTEM – INFORMATION MESSAGES

Message	Action
Lane keeping system malfunction Service required	The system has malfunctioned. Have your vehicle checked as soon as possible.
Front camera temporarily not available	The system has detected a condition that has caused the system to be temporarily unavailable.
Front camera Low visibility Clean screen	The system has detected a condition that requires you to clean the windshield in order for it to operate properly.
Front camera malfunction Service required	The system has malfunctioned. Have your vehicle checked as soon as possible.
Keep hands on steering wheel	The system requests that you keep your hands on the steering wheel.

Ranger (TRA, TRB) Vehicles Built From: 01-11-2024, CG4010en enGBR, Edition date: 202407, DOM

LANE KEEPING SYSTEM – FREQUENTLY ASKED QUESTIONS

Why is the feature not available (lane markings are gray) when I can see the lane markings on the road?
Your vehicle speed is less than 65 km/h (40 mph).
The sun is shining directly into the camera lens.
A quick intentional lane change has occurred.
Your vehicle stays too close to the lane markings for an extended interval of time.
Driving at high speeds in curves.
The last alert warning or aid intervention occurred a short time ago.
Ambiguous lane markings, for example, in construction zones.
Rapid transition from light to dark, or from dark to light.
Sudden offset in lane markings.
ABS or AdvanceTrac™ is active.
There is a camera blockage due to dirt, grime, fog, frost or water on the windshield.
You are driving too close to the vehicle in front of you.
Transitioning between no lane markings to lane markings, or vice versa.
There is standing water on the road.
Faint lane markings, for example, partial yellow lane markings on concrete roads.
Lane width is too narrow or too wide.
You have not calibrated the camera after a windshield replacement.
Driving on tight or on uneven roads.

Ranger (TRA, TRB) Vehicles Built From: 01-11-2024, CG4010en enGBR, Edition date: 202407, DOM

Why does the vehicle not come back toward the middle of the lane, as expected, in the Aid, or Aid + Alert mode?
High cross winds are present.
There is a large road crown.
Rough roads, grooves or shoulder drop-offs.
Heavy, uneven loading of the vehicle or improper tire inflation pressure.
You changed the tires or modified the suspension.

WHAT IS BLIND SPOT INFORMATION SYSTEM

Blind spot information system detects vehicles that may have entered the blind spot zone.

HOW DOES BLIND SPOT INFORMATION SYSTEM WORK

Blind spot information system uses sensors on both sides of your vehicle, detecting rearward from the exterior mirrors to approximately 4 m (13 ft) beyond the rear bumper. The detection area extends to approximately 18 m (59 ft) beyond the rear bumper when the vehicle speed is greater than 48 km/h (30 mph) to alert you of faster approaching vehicles.

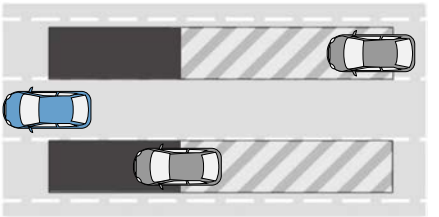

BLIND SPOT INFORMATION SYSTEM PRECAUTIONS

WARNING: Do not use the blind spot information system as a replacement for using the interior and exterior mirrors or looking over your shoulder before changing lanes. The blind spot information system is not a replacement for careful driving.

WARNING: The system may not operate properly during severe weather conditions, for example snow, ice, heavy rain and spray. Always drive with due care and attention. Failure to take care may result in a crash.

Note: *Blind spot information system does not prevent contact with other vehicles. It does not detect parked vehicles, pedestrians, animals or other infrastructure.*

BLIND SPOT INFORMATION SYSTEM LIMITATIONS

Blind spot information system does not operate in park (P) or reverse (R).

The system may not alert you if a vehicle quickly passes through the detection zone while overtaking.

Note: *For vehicles without the trailer coverage feature, we recommend that you switch the blind spot information system off when you attach a trailer.*

BLIND SPOT INFORMATION SYSTEM REQUIREMENTS

Vehicles with Automatic Transmission

Blind spot information system turns on when all the following occur:

- You start your vehicle.
- You shift into drive (D).
- The vehicle speed is greater than 10 km/h (6 mph).

Note: *The system does not operate in park (P) or reverse (R).*

Ranger (TRA, TRB) Vehicles Built From: 01-11-2024, CG4010en enGBR, Edition date: 202407, DOM

Vehicles with Manual Transmission

Blind spot information system turns on when all the following occur:

- You start your vehicle.
- The vehicle speed is greater than 10 km/h (6 mph).

Note: *The system does not operate in reverse (R).*

SWITCHING BLIND SPOT INFORMATION SYSTEM ON AND OFF

1. From the settings menu, press Driver Assistance. See **Center Display** (page 599).
2. Switch Blind Spot Information System on or off.

When you switch blind spot information system off, a warning lamp illuminates. When you switch the system on or off, the alert indicators flash twice. A telltale remains illuminated in the instrument cluster when the blind spot information system is switched off in the settings menu.

Note: *The system remembers the last setting when you start your vehicle.*

LOCATING THE BLIND SPOT INFORMATION SYSTEM SENSORS

The sensors are inside the brake lamp on both sides of your vehicle.

Note: *Keep the sensors free from snow, ice and large accumulations of dirt.*

Note: *Do not cover the sensors with bumper stickers, repair compound or other objects.*

Note: *Bike and cargo racks could cause false alerts due to obstruction of the sensor. We recommend switching the feature off when using a bike or cargo rack.*

Note: *Blocked sensors may affect system accuracy.*

If the sensors become blocked, a message appears in the instrument cluster display. See **Blind Spot Information System – Information Messages** (page 371). The alert indicators illuminate but the system does not alert you.

BLIND SPOT INFORMATION SYSTEM WITH TRAILER COVERAGE

WHAT IS BLIND SPOT INFORMATION SYSTEM WITH TRAILER COVERAGE

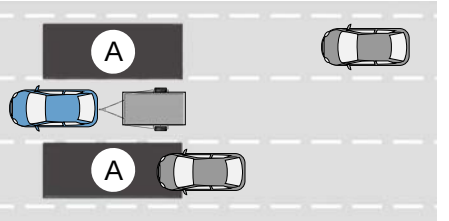

A. Trailer coverage detection zone.

Blind spot information system detects vehicles that may have entered the blind spot zone. The detection area is on both sides your vehicle and trailer, extending rearward from the exterior mirrors to the end of your trailer.

HOW DOES BLIND SPOT INFORMATION SYSTEM WITH TRAILER COVERAGE WORK

The blind spot information system with trailer coverage is designed to detect vehicles that could have entered the blind spot zone. The detection area is on both sides of your vehicle and trailer, extending rearward from the exterior mirrors to the end of your trailer. When you attach a trailer and have set up a trailer, the blind spot information system with trailer tow becomes active when driving forward above 10 km/h (6 mph).

You can set up the trailer length, select a trailer or switch blind spot information system with trailer tow off.

BLIND SPOT INFORMATION SYSTEM WITH TRAILER COVERAGE LIMITATIONS

Trailer coverage only supports conventional trailers. The system turns off if you select a fifth wheel or gooseneck trailer type.

Make sure the trailer width is less than or equal to 2.4 m (8 ft) and the length is less than 10.1 m (33 ft). If you input values higher, the system turns off.

Some trailers could cause a slight change in system performance:

- Large box trailers could cause false alerts to occur when driving next to infrastructures or near parked cars. A false alert could also occur while making a 90-degree turn.
- Trailers that have a width greater than 2.4 m (8 ft) at the front and have a total length greater than 6 m (20 ft) could cause delayed alerts when a vehicle is passing at high speeds.
- Box trailers that have a width greater than 2.4 m (8 ft) at the front could cause early alerts when you pass a vehicle.
- Clamshell or V-nose box trailers with a width greater than 2.4 m (8 ft) at the front could cause delayed alerts when a vehicle traveling the same speed as your vehicle merges lanes.

SWITCHING BLIND SPOT INFORMATION SYSTEM WITH TRAILER COVERAGE ON AND OFF

1. From the settings menu, press Driver Assistance. See **Center Display** (page 599).

2. Switch Blind Spot Information System on or off.

Note: *Some vehicles may not have the ability to switch the feature on or off.*

When you switch the system off, a warning lamp illuminates and the alert indicators flash twice.

Note: *The system turns off and a message appears when a trailer is connected, but not set up or selected.*

SETTING A TRAILER LENGTH

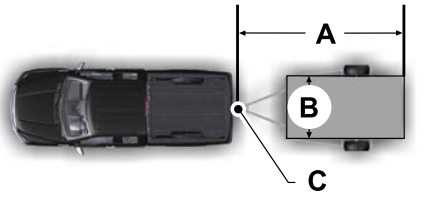

A Trailer length.
B Trailer width.
C Trailer hitch ball.

You can set up a trailer to work with the blind spot information system through the touchscreen by using the add trailer menu.

1. Input the trailer name, then save to continue trailer setup.

Note: *The system only supports conventional trailers.*

2. Trailer length measurement. The trailer length is the distance between the trailer hitch ball and the rear of the trailer. The maximum length the system can support is 10.1 m (33 ft).
3. Trailer width measurement. Measure the width at the front of the trailer. It is not measured at the widest point of the trailer. The maximum width at the front of the trailer the system can support is 2.4 m (8 ft).

Note: *If the trailer is a bike rack or cargo rack with electrical lighting, enter a length of around 1 m (3 ft). Cross traffic alert remains on for trailers with a length of 1 m (3 ft) or less.*

Note: *The system requires proper measurement and measure entry to properly function.*

SELECTING A TRAILER

When you connect a trailer to your vehicle, the trailer set up menu appears in the touchscreen. This menu allows you to set up a new trailer or choose from a previously set up trailer. A warning message appears and the system turns off if you do not choose or add a new trailer.

Note: *The warning message may not appear until your vehicle reaches 35 km/h (22 mph).*

BLIND SPOT INFORMATION SYSTEM INDICATORS

When the blind spot information system detects a vehicle, an alert indicator illuminates in the exterior mirror on the side from which the vehicle is approaching. If you switch the turn signal on for that side of your vehicle, the alert indicator flashes.

When you switch blind spot information system off, a warning lamp illuminates. When you switch the system on or off, the alert indicators flash twice. A telltale remains illuminated in the instrument cluster when the blind spot information system is switched off in the settings menu.

BLIND SPOT INFORMATION SYSTEM – TROUBLESHOOTING

BLIND SPOT INFORMATION SYSTEM – WARNING LAMPS

If the system detects a fault, it illuminates in the instrument cluster and a message appears in the instrument cluster display. Have your vehicle checked as soon as possible.

BLIND SPOT INFORMATION SYSTEM – INFORMATION MESSAGES

Message	Action
BLIS malfunction	A fault with the system has occurred. Have your vehicle checked as soon as possible.
BLIS not available Sensor blocked See manual	Something is blocking the sensors. Clean the sensors.
BLIS deactivated Trailer attached	The system automatically turns off and displays this message when you connect a trailer to your vehicle under any of the following conditions: - Your vehicle does not have blind spot information system with trailer coverage. - You switch the blind spot information system off through the touchscreen. - Your trailer exceeds the limits for the system. See **Setting a Trailer Length** (page 370). Only appears if your vehicle has blind spot information system with trailer coverage.

Ranger (TRA, TRB) Vehicles Built From: 01-11-2024, CG4010en enGBR, Edition date: 202407, DOM

Note: *When connecting a trailer, the system may detect the trailer and turn the system OFF. If the system does not automatically turn OFF, manually switch the blind spot information system OFF. If your vehicle has the blind spot information system with trailer coverage, the system prompts you to set up a trailer that allows the feature to function, if your trailer meets the requirements of the system.*

WHAT IS CROSS TRAFFIC ALERT

The system alerts you of vehicles approaching from the sides behind your vehicle when you shift into reverse (R).

HOW DOES CROSS TRAFFIC ALERT WORK

Cross traffic alert detects vehicles that approach at a speed between 6–60 km/h (4–37 mph). Coverage decreases when the sensors are partially, mostly or fully obstructed.

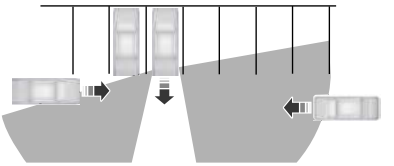

The sensor on the left-hand side is only partially obstructed and zone coverage on the right-hand side is maximized.

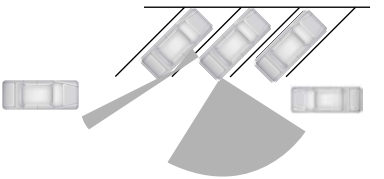

Zone coverage also decreases when parking at narrow angles. The sensor on the left-hand side is mostly obstructed and zone coverage on that side is severely reduced.

Note: *Slowly reversing helps increase the coverage area and effectiveness.*

CROSS TRAFFIC ALERT PRECAUTIONS

WARNING: Do not use the cross traffic alert system as a replacement for using the interior and exterior mirrors or looking over your shoulder before reversing out of a parking space. The cross traffic alert system is not a replacement for careful driving.

WARNING: The system may not operate properly during severe weather conditions, for example snow, ice, heavy rain and spray. Always drive with due care and attention. Failure to take care may result in a crash.

CROSS TRAFFIC ALERT LIMITATIONS

The system may not correctly operate when any of the following occur:

- Something is blocking the sensors.
- Adjacently parked vehicles or objects are obstructing the sensors.
- Vehicles approach at speeds less than 6 km/h (4 mph) or greater than 60 km/h (37 mph).
- Your vehicle speed is greater than 12 km/h (7 mph).
- You reverse out of an angled parking space.

Ranger (TRA, TRB) Vehicles Built From: 01-11-2024, CG4010en enGBR, Edition date: 202407, DOM

Cross Traffic Alert Limitations with a Trailer Attached

The system remains on when you attach a trailer to vehicles with blind spot information system with trailer coverage under the following conditions:

- You connect a trailer.
- The trailer is a bike rack or cargo rack with a maximum length of 1 m (3 ft).
- You set the trailer length to 1 m (3 ft) in the instrument cluster display.

Note: *The system may not correctly operate when towing a trailer. For vehicles with a trailer tow module and tow bar approved by the manufacturer, the system turns off when you attach a trailer. For vehicles with an aftermarket trailer tow module or tow bar, we recommend that you switch the system off when you attach a trailer.*

SWITCHING CROSS TRAFFIC ALERT ON AND OFF

1. From the settings menu, press Driver Assistance. See **Center Display** (page 599).
2. Press Cross Traffic Alert.
3. Switch the feature on or off.

When you switch the system on or off, the alert indicators flash twice.

Note: *The system switches on every time you switch the ignition on.*

LOCATING THE CROSS TRAFFIC ALERT SENSORS

The sensors are inside the brake lamp on both sides of your vehicle.

Note: *Keep the sensors free from snow, ice and large accumulations of dirt.*

Note: *Do not cover the sensors with bumper stickers, repair compound or other objects.*

Note: *Blocked sensors may affect system accuracy.*

If something is blocking the sensors, a message may appear in the information display when you shift into reverse (R).

Note: *Bike and cargo racks could cause false alerts due to obstruction of the sensor. We recommend switching the feature off when using a bike or cargo rack.*

CROSS TRAFFIC ALERT INDICATORS

When the cross traffic alert detects an approaching vehicle, a tone sounds, a warning lamp illuminates in the relevant exterior mirror and arrows appear in the touchscreen to show from which side the vehicle is approaching.

Ranger (TRA, TRB) Vehicles Built From: 01-11-2024, CG4010en enGBR, Edition date: 202407, DOM

If the system malfunctions, a warning lamp illuminates in the instrument cluster and a message appears in the instrument cluster display. Have your vehicle checked as soon as possible.

Note: *In some conditions, the system could alert you, even when there is nothing in the detection zone, for example a vehicle passing further away from your vehicle.*

CROSS TRAFFIC ALERT – TROUBLESHOOTING

CROSS TRAFFIC ALERT – WARNING LAMPS

If the system malfunctions, it illuminates in the instrument cluster and a message appears in the instrument cluster display. Have your vehicle checked as soon as possible.

CROSS TRAFFIC ALERT – INFORMATION MESSAGES

Message	Action
Cross traffic alert	Displays instead of indication arrows when the system detects a vehicle. Check for approaching traffic. Only available in vehicles with 8 inch displays.
Cross Traffic not available Sensor blocked See manual	Indicates blocked cross traffic alert system sensors. Clean the sensors. If the message continues to appear, have your vehicle checked as soon as possible.
Cross traffic system malfunction	The system has malfunctioned. Have your vehicle checked as soon as possible.
Cross traffic alert deactivated Trailer attached	Displays if you attach a trailer to your vehicle.

Note: *When connecting a trailer, the system may detect the trailer and turn the system OFF. If the system does not turn OFF automatically, switch the cross traffic alert system OFF manually. See* ***Switching Cross Traffic Alert On and Off*** *(page 374).*

Ranger (TRA, TRB) Vehicles Built From: 01-11-2024, CG4010en enGBR, Edition date: 202407, DOM

WHAT IS PRE-COLLISION ASSIST

Pre-collision assist detects and warns of approaching hazards in the roadway. The system provides multiple levels of assistance to help avoid a collision if your vehicle is rapidly approaching another stationary vehicle, a vehicle traveling in the same direction as yours, or a pedestrian or cyclist within your driving path.

HOW DOES PRE-COLLISION ASSIST WORK

The system warns the driver of potential hazards by providing three levels of assistance.

If your vehicle is rapidly approaching potential hazards the system provides the following levels of functionality:

1. Alert.
2. Brake support.
3. Automatic emergency braking.

Alert: When active, a flashing visual warning appears and an audible warning tone sounds.

Brake Support: The system helps reduce the impact speed by preparing the brakes for rapid braking. The system does not automatically apply the brakes. If you press the brake pedal, the system may apply additional braking up to maximum braking force, even if you lightly press the brake pedal.

Automatic Emergency Braking: Automatic emergency braking may activate if the system determines that a collision is imminent.

Note: *If the pre-collision assist alerts are too frequent or disturbing, you can reduce the alert sensitivity. Setting the low sensitivity results in fewer and later warnings of a potential forward collision. The manufacturer recommends using the high sensitivity setting where possible.*

Note: *Automatic emergency braking performance is not affected by the sensitivity setting.*

Each system has various levels of detection capabilities. See **Pre-Collision Assist Limitations** (page 377).

PRE-COLLISION ASSIST PRECAUTIONS

WARNING: You are responsible for controlling your vehicle at all times. The system is designed to be an aid and does not relieve you of your responsibility to drive with due care and attention. Failure to follow this instruction could result in the loss of control of your vehicle, personal injury or death.

WARNING: The system only provides limited braking. Your vehicle may not always decelerate quickly enough to avoid a crash without driver intervention. Apply the brakes when necessary.

WARNING: The system does not operate during hard acceleration or steering. Failure to take care may lead to a crash or personal injury.

Ranger (TRA, TRB) Vehicles Built From: 01-11-2024, CG4010en enGBR, Edition date: 202407, DOM

WARNING: The system may operate with reduced function during cold and inclement weather conditions. Snow, ice, rain, spray and fog can adversely affect the system. Keep the front camera and radar free of snow and ice. Failure to follow this instruction may result in the loss of control of your vehicle, serious personal injury or death.

WARNING: The system may not function properly if your vehicle is fitted with a replacement windshield not approved by us.

WARNING: Do not perform windshield repairs around the rear-view mirror. Failure to follow this instruction could limit sensor performance.

WARNING: System performance could be reduced in situations where the vehicle camera has limited detection capability. These situations include but are not limited to direct or low sunlight, vehicles at night without tail lights, unconventional vehicle types, pedestrians or cyclists with complex backgrounds, running pedestrians or fast moving cyclists, partly obscured pedestrians or cyclists, pedestrians or cyclists that the system cannot distinguish from a group. Failure to take care may result in the loss of control of your vehicle, personal injury or death.

WARNING: The system cannot help prevent all crashes. Do not rely on this system to replace driver judgment and the need to maintain a safe distance and speed.

WARNING: Take additional care if your vehicle is heavily loaded or you are towing a trailer. These conditions could result in reduced performance of this system. Failure to follow this instruction could result in the loss of control of your vehicle, personal injury or death.

Note: *Automatic emergency braking may activate when a collision is imminent. The system cannot prevent all crashes, but may reduce crash severity. Do not test automatic emergency braking or forward collision warning. Testing this system must only be conducted by authorized test facilities using specialized equipment. Do not use automatic emergency braking to replace normal braking for any reason. Relying on automatic emergency braking to stop your vehicle may cause an unexpected accident which could lead to serious injury or death.*

Note: *The system does not detect animals.*

PRE-COLLISION ASSIST LIMITATIONS

Pre-collision assist depends on the detection ability of its camera and sensors. Any obstructions or damage to these areas can limit detection or prevent the system from functioning. See **Locating the Pre-Collision Assist Sensors** (page 379).

The system is active at 5 km/h (3 mph) and above.

Note: *The pre-collision assist system automatically disables when you manually disable AdvanceTrac™, 4X4 low, and Rock Crawl (if available).*

Note: *Brake support and automatic emergency braking are active up to the maximum speed of the vehicle.*

Ranger (TRA, TRB) Vehicles Built From: 01-11-2024, CG4010en enGBR, Edition date: 202407, DOM

Pedestrian Detection Limitations

Pedestrian detection is active at speeds up to 80 km/h (50 mph).

Pedestrian detection operates optimally when detected hazards are clearly identifiable. System performance may reduce in situations where pedestrians are running, partly obscured, have a complex background, or cannot be distinguished from a group.

Cyclist Detection Limitations

Cyclist detection is active at speeds up to 80 km/h (50 mph).

Cyclist detection functions optimally when detected hazards are clearly identifiable. System performance may reduce in situations where cyclists are fast-moving, partly obscured, have a complex background, or cannot be distinguished from a group.

Intersection Assist (If Equipped)

If your vehicle comes with a radar sensor the pre-collision assist system may operate in a scenario where you are turning across the path of an oncoming vehicle, or with crossing pedestrians. Detection of vehicles driving in an oncoming direction is active if your vehicle is driving at speeds up to 30 km/h (19 mph). Detection of crossing pedestrians at an intersection is active if your vehicle is driving at speeds up to 30 km/h (19 mph).

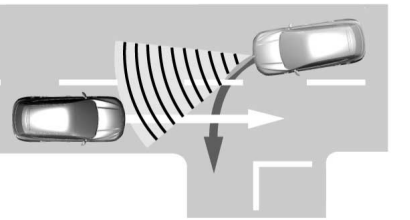

SWITCHING PRE-COLLISION ASSIST ON AND OFF

You cannot switch the system off.

Adjusting the Pre-Collision Assist Settings

You can adjust additional feature settings by using the touchscreen controls in the pre-collision assist menu.

Note: *Automatic emergency braking and evasive steering assist automatically turn on every time you start your vehicle.*

Note: *If you switch automatic emergency braking off, evasive steering assist switches off.*

LOCATING THE PRE-COLLISION ASSIST SENSORS

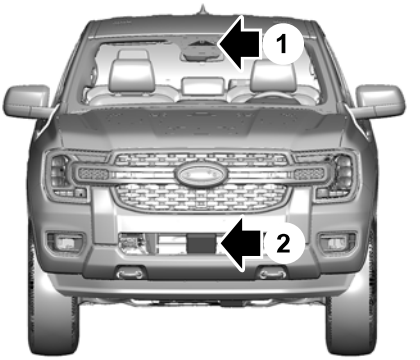

1. Camera.
2. Radar sensor.

If a message regarding a blocked sensor or camera appears in the instrument cluster, something is obstructing the radar signals or camera images. The radar sensor is located behind the fascia cover in the center of the lower grille. If a sensor or camera is blocked, the system may not function, or performance may reduce. See **Pre-Collision Assist – Information Messages** (page 382).

Note: *Proper system operation requires the camera have a clear view of the road. Have any windshield damage in the area of the camera's field of view repaired.*

Note: *If something hits the front end of your vehicle or damage occurs and your vehicle has a radar sensor, the radar sensing zone could change. This could cause missed or false vehicle detections. Have your vehicle serviced to have the radar checked for proper coverage and operation.*

Note: *If your vehicle detects excessive heat at the camera or a potential misalignment condition, a message could display in the instrument cluster indicating the sensor is temporarily unavailable. When operational conditions are correct, the message deactivates. For example, when the ambient temperature around the sensor decreases or the sensor recalibrates successfully.*

DISTANCE INDICATION

WHAT IS DISTANCE INDICATION

Distance indication displays the gap between your vehicle and the vehicle ahead of you.

Note: *The graphic does not display if you switch on cruise control or adaptive cruise control.*

Vehicle Speed	System Sensitivity	Distance Indicator Color	Distance Gap	Time Gap
100 km/h (62 mph).	Normal.	Blue.	Greater than 25 m (82 ft).	Greater than 0.9 seconds.
		Yellow.	17–25 m (56–82 ft).	0.6-0.9 seconds.
		Red.	Less than 17 m (56 ft).	Less than 0.6 seconds.

SWITCHING DISTANCE INDICATION ON AND OFF

1. From the settings menu, press Driver Assistance. See **Center Display** (page 599).
2. Press Pre-Collision Assist.
3. Press Distance Indication.
4. Switch the feature on or off.

DISTANCE INDICATION INDICATOR

The indicator displays the time gap between your vehicle and vehicles traveling in the same direction ahead of you.

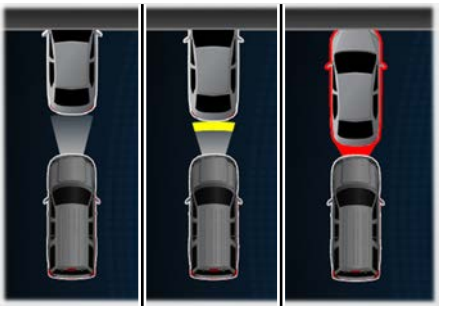

DISTANCE ALERT

WHAT IS DISTANCE ALERT

The system alerts you with a warning lamp if the distance to the vehicle ahead is small.

Note: *The warning lamp does not illuminate if cruise control or adaptive cruise control is active.*

ADJUSTING THE SENSITIVITY OF DISTANCE ALERT

1. From the settings menu, press Driver Assistance. See **Center Display** (page 599).
2. Press Pre-Collision Assist.
3. Press Alert Sensitivity.

AUTOMATIC EMERGENCY BRAKING

WHAT IS AUTOMATIC EMERGENCY BRAKING

Automatic emergency braking may activate if the system determines that a collision is imminent. The system may help to reduce impact damage or completely avoid the crash.

SWITCHING AUTOMATIC EMERGENCY BRAKING ON AND OFF

1. From the settings menu, press Driver Assistance. See **Center Display** (page 599).
2. Press Pre-Collision Assist.
3. Press Auto Emergency Braking.
4. Switch the feature on or off.

Note: *A telltale remains illuminated in the instrument cluster when automatic emergency braking is switched off using the settings menu.*

EVASIVE STEERING ASSIST

WHAT IS EVASIVE STEERING ASSIST

If your vehicle is rapidly approaching a road user, evasive steering assist helps you steer around the road user.

After you turn the steering wheel in an attempt to avoid a crash with the road user, the system applies additional steering torque to help you steer around the road user. After you pass the road user, the system applies steering torque when you turn the steering wheel to steer back into the lane. The system deactivates after you fully pass the road user.

Note: *Road users are defined as pedestrians or bicyclists in your vehicle's path or another stationary vehicle in the same lane or a vehicle traveling in the same lane in the same direction as you.* *See **Pre-Collision Assist Precautions** (page 376).*

EVASIVE STEERING ASSIST LIMITATIONS

Evasive steering assist only activates when all the following occur:

- Automatic emergency braking and evasive steering assist are on.
- The system detects a road user ahead and starts to apply the brakes.
- You significantly turn the steering wheel to steer around a road user.

Note: *Evasive steering assist does not automatically steer around a road user. If you do not turn the steering wheel, evasive steering assist does not activate.*

Note: *Evasive steering assist does not activate if the distance to the road user ahead is too small and the system cannot avoid a crash.*

SWITCHING EVASIVE STEERING ASSIST ON AND OFF

1. From the settings menu, press Driver Assistance. See **Center Display** (page 599).
2. Press Pre-Collision Assist.
3. Press Evasive Steering Assist.
4. Switch the feature on or off.

Note: *If you switch automatic emergency braking off, evasive steering assist turns off.*

Note: *Automatic emergency braking and evasive steering assist turn on every time you start your vehicle.*

PRE-COLLISION ASSIST – TROUBLESHOOTING

PRE-COLLISION ASSIST – WARNING LAMPS

A telltale illuminates in the instrument cluster display to indicate if the system is disabled, unavailable, or temporarily degraded due to external environmental conditions.

Note: *If the telltale illuminates without a corresponding information message, make sure the setting for automatic emergency braking is switched on.* *See **Switching Automatic Emergency Braking On and Off** (page 380).* *No action is needed unless an information message appears.* *See **Pre-Collision Assist Precautions** (page 376).*

Ranger (TRA, TRB) Vehicles Built From: 01-11-2024, CG4010en enGBR, Edition date: 202407, DOM

PRE-COLLISION ASSIST – INFORMATION MESSAGES

Message	Action
Pre-collision assist not available Sensor blocked	You have a blocked sensor due to bad weather, ice, mud or water in front of the radar sensor. You can typically clean the sensor to resolve.
Pre-collision assist not available	A fault with the system has occurred. Have your vehicle checked as soon as possible.

PRE-COLLISION ASSIST – FREQUENTLY ASKED QUESTIONS

Camera Troubleshooting

The windshield in front of the camera is dirty or obstructed.

- Clean the outside of the windshield in front of the camera.

The windshield in front of the camera is clean, but the message remains in the instrument cluster display.

- Wait a short time. It could take several minutes for the camera to detect that there is no obstruction.

Radar Troubleshooting

The surface of the radar in the grille is dirty or obstructed.

- Clean the grille surface in front of the radar or remove the object causing the obstruction.

The surface of the radar in the grille is clean, but the message remains in the instrument cluster display.

- Wait a short time. It could take several minutes for the radar to detect that there is no obstruction.

Heavy rain, spray or fog is interfering with the radar signals.

- Due to the current conditions, the system temporarily disables this feature. Pre-collision assist reactivates a short time after the weather conditions improve.

Swirling water, snow or ice on the surface of the road is interfering with the radar signals.

- Due to the current conditions, the system temporarily disables this feature. Pre-collision assist reactivates a short time after the weather conditions improve.

Radar is out of alignment due to a front-end impact.

- Have your vehicle serviced to have the radar checked for proper coverage and operation.

PRE-COLLISION ASSIST – FREQUENTLY ASKED QUESTIONS - VEHICLES WITH: INTERSECTION ASSIST

What should I do if the windshield in front of the camera is dirty or obstructed?

- Clean the outside of the windshield in front of the camera.

What if the windshield in front of the camera is clean, but the message remains in the instrument cluster display?

- Wait a short time. It could take several minutes for the camera to detect that there is no obstruction.

What should I do if the surface of the radar in the grille is dirty or obstructed?

- Clean the grille surface in front of the radar or remove the object causing the obstruction.

Ranger (TRA, TRB) Vehicles Built From: 01-11-2024, CG4010en enGBR, Edition date: 202407, DOM

What if the surface of the radar in the grille is clean, but the message remains in the instrument cluster display?

- Wait a short time. It could take several minutes for the radar to detect that there is no obstruction.

Can weather or road conditions interfere with the radar signals?

- Yes, weather such as heavy rain, spray or fog as well as water, snow or ice on the surface of the road can interfere with the radar signals. In these situations, the system temporarily disables this feature. Pre-collision assist reactivates a short time after the weather conditions improve.

What if the radar is out of alignment due to a front end impact?

- Have your vehicle serviced to have the radar checked for proper coverage and operation.

Ranger (TRA, TRB) Vehicles Built From: 01-11-2024, CG4010en enGBR, Edition date: 202407, DOM

WHAT IS DRIVER ALERT

Driver alert alerts you if it determines that you are becoming drowsy or if your driving deteriorates.

HOW DOES DRIVER ALERT WORK

Driver alert uses a front camera sensor located behind the interior mirror to calculate your alertness level based on your driving behavior in relation to the lane markings and other factors.

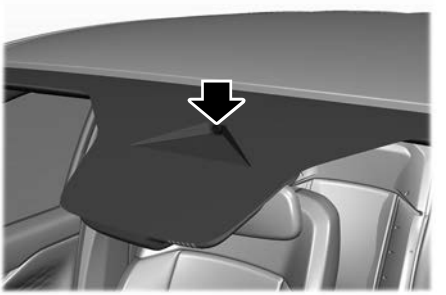

DRIVER ALERT PRECAUTIONS

WARNING: You are responsible for controlling your vehicle at all times. The system is designed to be an aid and does not relieve you of your responsibility to drive with due care and attention. Failure to follow this instruction could result in the loss of control of your vehicle, personal injury or death.

WARNING: Take regular rest breaks if you feel tired. Do not wait for the system to warn you.

WARNING: Certain driving styles may result in the system warning you even if you are not feeling tired.

WARNING: In cold and severe weather conditions the system may not function. Rain, snow and spray can all limit sensor performance.

WARNING: The system will not operate if the sensor cannot track the road lane markings.

WARNING: If damage occurs in the immediate area surrounding the sensor, have your vehicle checked as soon as possible.

WARNING: The system may not correctly operate if your vehicle is fitted with a suspension kit not approved by us.

WARNING: The system may not operate properly if the sensor is blocked. Keep the windshield free from obstruction.

Note: *If something is blocking the camera or damaged the windshield, Driver Alert may not function.*

DRIVER ALERT LIMITATIONS

Driver alert may not function correctly if:

- The sensor cannot track the road lane markings.
- Your vehicle's speed is less than approximately 65 km/h (40 mph).

Ranger (TRA, TRB) Vehicles Built From: 01-11-2024, CG4010en enGBR, Edition date: 202407, DOM

SWITCHING DRIVER ALERT ON AND OFF

1. From the settings menu, press Driver Assistance. See **Center Display** (page 599).
2. Press Driver Alert.
3. Switch the feature on or off.

DRIVER ALERT INDICATORS

When the system detects an issue, for example, the camera is blocked or misaligned, an off symbol appears in the instrument cluster display. If the symbol continues to appear, have your vehicle checked as soon as possible.

DRIVER ALERT – TROUBLESHOOTING

DRIVER ALERT – INFORMATION MESSAGES

Message	Action
Driver fatigue warning Rest now	Stop and rest as soon as it is safe to do so.
Driver fatigue warning Rest suggested	Take a rest soon.

Ranger (TRA, TRB) Vehicles Built From: 01-11-2024, CG4010en enGBR, Edition date: 202407, DOM

WHAT IS TRAFFIC SIGN RECOGNITION

Traffic sign recognition detects traffic signs to inform you of the current speed limit and traffic conditions. Detected signs appear in the instrument cluster display.

HOW DOES TRAFFIC SIGN RECOGNITION WORK

Traffic sign recognition uses a sensor behind the interior mirror to detect traffic signs.

If your vehicle has a navigation system, stored traffic sign data could influence the indicated speed limit value.

Note: *: This feature uses map data. We recommend having all connected vehicle settings enabled to allow the map content to be updated to the latest version. See* ***Connected Vehicle Settings*** *(page 591). If your market is not connected, take your vehicle to an authorized dealer to perform the periodical updates.*

The system detects recognizable traffic signs, for example:

- Speed limit signs.
- No overtaking signs.
- Speed limit cancellation signs.
- No overtaking cancellation signs.
- Stop Signs (If applicable).
- Yield Signs (If applicable).

TRAFFIC SIGN RECOGNITION PRECAUTIONS

WARNING: You are responsible for controlling your vehicle at all times. The system is designed to be an aid and does not relieve you of your responsibility to drive with due care and attention. Failure to follow this instruction could result in the loss of control of your vehicle, personal injury or death.

WARNING: In cold and severe weather conditions the system may not function. Rain, snow and spray can all limit sensor performance.

WARNING: The system may not operate properly if the sensor is blocked. Keep the windshield free from obstruction.

WARNING: The system may not operate properly if your vehicle has a non-Ford windshield. Do not carry out windshield repairs in the area around the sensor.

Note: *Always replace headlamp bulbs and other bulbs with parts that meet the specifications for your vehicle. Non-standard parts could reduce system performance.*

Note: *If your vehicle has a suspension kit not approved by Ford, the system may not correctly function.*

TRAFFIC SIGN RECOGNITION LIMITATIONS

Traffic sign recognition may not detect the correct speed due to:

- Construction zones.
- Outdated map data.

Ranger (TRA, TRB) Vehicles Built From: 01-11-2024, CG4010en enGBR, Edition date: 202407, DOM

- Incorrect recognition of traffic signs by the sensor of signs on parallel roads or exit ramps.
- Missed recognition of faded, dirty or distorted signs.

Note: *The system may not detect all speed and traffic signs and may incorrectly read signs.*

TRAFFIC SIGN RECOGNITION INDICATORS

The system can display two traffic signs in parallel.

You can view the status at any time using the instrument cluster display.

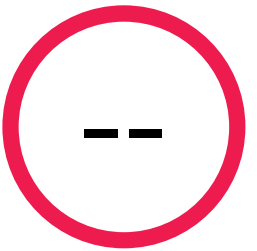

When the system does not detect a speed sign, for example, navigation map data is not available for a short period of time, or the system has no input, a speed sign with two hyphens appears in the instrument cluster display.

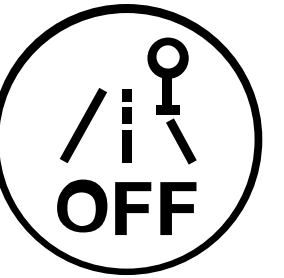

When the system detects an issue, for example, navigation map data is not available for a longer period of time, or the camera is blocked or misaligned, an off symbol appears in the instrument cluster display. If the symbol continues to appear, have your vehicle checked as soon as possible.

The system displays recognizable traffic signs in two stages as follows:

1. All new traffic signs appear brighter than the others in the display.
2. After a predetermined time they display normally.

If the system detects a supplementary traffic sign, it displays below the respective traffic sign. For example, when passing a speed limit for vehicles with a trailer sign.

Note: *If your vehicle has a navigation system, stored traffic sign data may influence the indicated speed limit value.*

TRAFFIC SIGN RECOGNITION SETTINGS

From the driver assistance menu, press Speed Limit Assist. See **Center Display Overview** (page 599).

You can adjust the following settings:

Ranger (TRA, TRB) Vehicles Built From: 01-11-2024, CG4010en enGBR, Edition date: 202407, DOM

- Switch the speed warning on or off.
  - You can set the system speed warning to alert you when the vehicle speed exceeds the speed limit recognized by the system.
- Switch the chime for speed limit change on or off.

LIM Press and hold the button to temporarily switch the speed warning off.

Note: *The speed warning turns on automatically after every ignition cycle.*

If you see this icon next to a menu option, press it for more information.

TRAFFIC SIGN RECOGNITION – TROUBLESHOOTING

TRAFFIC SIGN RECOGNITION – INFORMATION MESSAGES

Message	Action
Traffic sign recognition Reduced performance See manual	The traffic sign data provided by the navigation system is unavailable due to weak or no signal. Wait a short period of time for the signal to improve. If the message continues to appear, have the system checked as soon as possible.

TRAFFIC SIGN RECOGNITION – FREQUENTLY ASKED QUESTIONS

Why does the speed limit or traffic sign change without any sign on the road?

The speed limit and traffic sign changes due to stored data in the map data.

Why does traffic sign recognition show a wrong sign?

The system shows a wrong sign due to incorrect and outdated map data or due to incorrect recognition of the signs by the camera.

WHAT IS WRONG WAY ALERT

The system alerts you if it detects that you are driving the wrong way on a freeway exit road.

HOW DOES WRONG WAY ALERT WORK

The system uses a sensor behind the interior mirror to detect no entry signs and uses information from the navigation system.

If the system detects that you are driving the wrong way on a freeway exit road, a message appears in the instrument cluster display and a tone sounds. The audio system volume mutes and navigation system guidance pauses.

Note: *Traffic sign data provided by the navigation system contains information integrated to the data carrier release.*

WRONG WAY ALERT PRECAUTIONS

WARNING: You are responsible for controlling your vehicle at all times. The system is designed to be an aid and does not relieve you of your responsibility to drive with due care and attention. Failure to follow this instruction could result in the loss of control of your vehicle, personal injury or death.

WARNING: The system may not operate properly if the sensor is blocked. Keep the windshield free from obstruction.

Note: *Do not carry out windshield repairs in the immediate area surrounding the sensor.*

Note: *Always fit Ford approved parts when replacing headlamp bulbs. Other bulbs could reduce system performance.*

Note: *In exceptional conditions, the system could alert you even if you are not driving the wrong way on a freeway exit road.*

WRONG WAY ALERT LIMITATIONS

The system could not detect all traffic signs and could incorrectly read signs.

If your vehicle has a suspension kit not approved by us, the system could not correctly function.

The system does not operate in some countries. We recommend that you check system availability before use.

In cold and severe weather conditions the system could not function. Rain, snow, spray and large contrasts in lighting can all prevent the sensor from functioning correctly.

The system could not correctly operate in areas under construction or new infrastructure.

SWITCHING WRONG WAY ALERT ON AND OFF

1. Press the button on the touchscreen.
2. Press ***Driver Assistance***.
3. Switch the feature on or off.

Ranger (TRA, TRB) Vehicles Built From: 01-11-2024, CG4010en enGBR, Edition date: 202407, DOM

WRONG WAY ALERT – TROUBLESHOOTING

WRONG WAY ALERT – INFORMATION MESSAGES

Message	Details
Check driving direction	The system detects that you are driving the wrong way on a freeway exit road. Ensure you are driving in the correct direction.

LOAD CARRYING PRECAUTIONS

Keep your loaded vehicle weight within its design rating capability, with or without a trailer. Properly loading your vehicle provides maximum return of vehicle design performance. Before you load your vehicle, become familiar with the following terms for determining your vehicle's weight rating, with or without a trailer, from the vehicle's Tire and Loading Information label or Safety Compliance Certification label.

The gross combined weight must never exceed the Gross Combined Weight Rating.

WARNING: The appropriate loading capacity of your vehicle can be limited either by volume capacity (how much space is available) or by payload capacity (how much weight the vehicle should carry). Once you have reached the maximum payload of your vehicle, do not add more cargo, even if there is space available. Overloading or improperly loading your vehicle can contribute to loss of vehicle control and vehicle rollover.

WARNING: Exceeding the Safety Compliance Certification label vehicle weight limits can adversely affect the performance and handling of your vehicle, cause vehicle damage and can result in the loss of control of your vehicle, serious personal injury or death.

WARNING: Do not use replacement tires with lower load carrying capacities than the original tires because they may lower your vehicle's Gross Vehicle Weight Rating and Gross Axle Weight Rating limitations. Replacement tires with a higher limit than the original tires do not increase the Gross Vehicle Weight Rating and Gross Axle Weight Rating limitations.

WARNING: Do not exceed the maximum front and rear axle loads for your vehicle.

WARNING: Do not exceed the maximum gross vehicle weight stated on the vehicle identification plate. Failure to follow this instruction could result in personal injury.

WARNING: Exceeding any vehicle weight rating can adversely affect the performance and handling of your vehicle, cause vehicle damage and can result in the loss of control of your vehicle, serious personal injury or death.

WARNING: When loading the roof racks, we recommend you evenly distribute the load, as well as maintain a low center of gravity. Loaded vehicles, with higher centers of gravity, may handle differently than unloaded vehicles. Take extra precautions, such as slower speeds and increased stopping distance, when driving a heavily loaded vehicle.

Load carrying can also impact other systems present in your vehicle. See **Lane Centering Precautions** (page 328). See **Adaptive Cruise Control Precautions** (page 321).

Ranger (TRA, TRB) Vehicles Built From: 01-11-2024, CG4010en enGBR, Edition date: 202407, DOM

Note: *If your vehicle comes with bed rails, we recommend that you evenly distribute the load and do not exceed the total maximum load and maximum load capacity of 40 kg (90 lb).*

LOAD RETAINING FIXTURES AND CAPACITIES

Note: *Overloading the load retaining fixture could damage it.*

Note: *Make sure you properly balance and secure the cargo load. Failure to follow this can cause cargo instability and damage to the fixtures.*

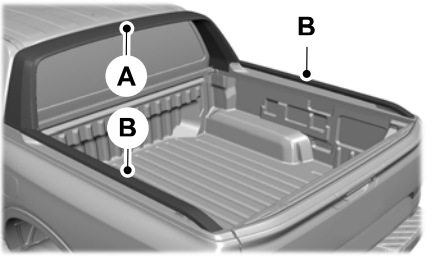

A Sports hoop.

B Box rails.

The box rails can be used to attach crossbars or secondary accessories. The maximum load on the box rails, including the crossbars or secondary accessories, is 40 kg (90 lb).

Note: *Do not sit or stand on the sports hoop.*

Box Rail Tie-Down Points (Double Cab)

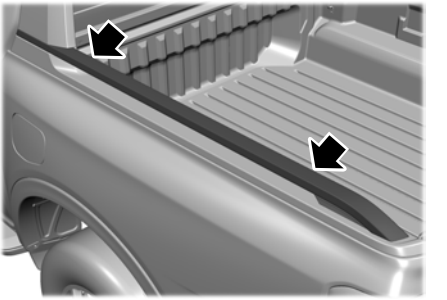

Use the lashing points toward the front and rear of the box rails.

Note: *Do not lash at the center point of the box rails.*

Note: *Maximum load per lashing point is 150 kg (330 lb).*

Box Rail Tie-Down Points (Rap Cab)

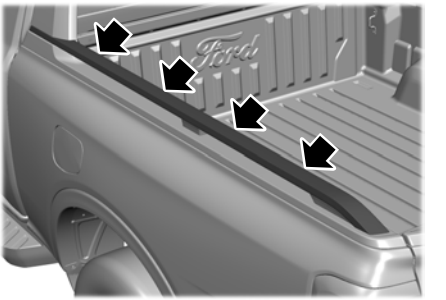

Lashing points can be used anywhere along the box rails.

Note: *Maximum Load per lashing point is 150 kg (330 lb).*

External Tie Down Rails (If Equipped)

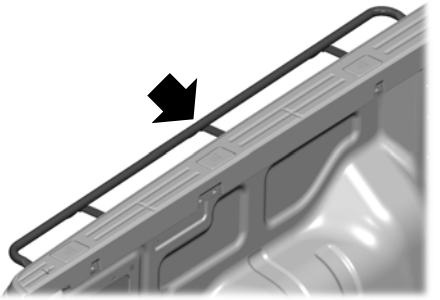

The external tie down rails can be used to secure loads. The maximum load is 150 kg (330 lb) per rail.

Load Rest (If Equipped)

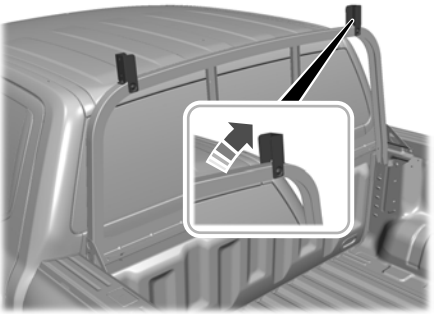

Note: *Secure luggage or cargo placed on the load rest with the load rest stoppers.*

Load Box

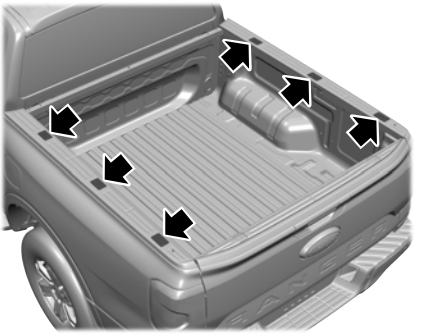

Note: *The loadbox upper plastic capping is not designed to bear significant load. Do not clamp directly to this surface. Clamp only to the mounting points.*

Power Roller Shutter Rails (If Equipped)

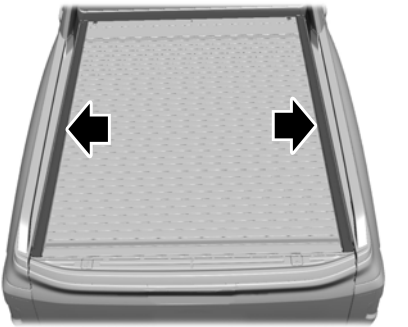

The roller shutter rails can be used to attach crossbars or secondary accessories. The maximum load on the roller shutter rails, including the crossbars or secondary accessories, is 30 kg (65 lb).

ROOF RACK

ROOF RACK PRECAUTIONS

WARNING: Read and follow the manufacturer's instructions when you are fitting a roof rack.

WARNING: When loading the roof racks, we recommend you evenly distribute the load, as well as maintain a low center of gravity. Loaded vehicles, with higher centers of gravity, may handle differently than unloaded vehicles. Take extra precautions, such as slower speeds and increased stopping distance, when driving a heavily loaded vehicle.

WARNING: The appropriate loading capacity of your vehicle can be limited either by volume capacity (how much space is available) or by payload capacity (how much weight the vehicle should carry). Once you have reached the maximum payload of your vehicle, do not add more cargo, even if there is space available. Overloading or improperly loading your vehicle can contribute to loss of vehicle control and vehicle rollover.

WARNING: Do not exceed the maximum load rating of the load retaining fixtures. Failure to follow this instruction could result in personal injury.

Note: *If you use a roof rack, the fuel consumption of your vehicle will be higher and you may experience different driving characteristics.*

Note: *Never place loads directly on the roof panel. The roof panel is not designed to directly carry a load.*

Place loads on the crossbars fitted to the roof rack side rails or alternative load carrying Ford rooftop accessory. When using the roof rack system, we recommend that you use genuine Ford accessory crossbars specifically designed for your vehicle.

Make sure that you securely fasten the load. Check the tightness of the load before driving and at each fuel stop.

REMOVING AND INSTALLING THE ROOF RACK

Removing the Roof Rack

1. Remove the roof rack bolt covers by inserting two narrow trim removal tools simultaneously.

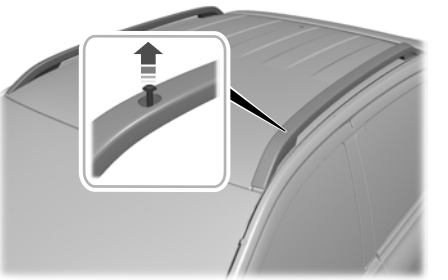

Ranger (TRA, TRB) Vehicles Built From: 01-11-2024, CG4010en enGBR, Edition date: 202407, DOM

2. Using a Torx T40 tool, remove the front roof rack fasteners. Repeat the process for removing the rear roof rack fasteners.

3. Loosen the roof rack by sliding the inner support brackets toward the center of the rail.

4. Remove the roof rack from the vehicle.

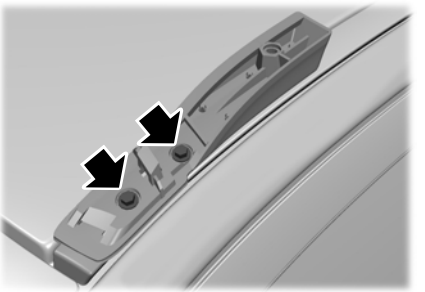

5. Remove the bolts securing the front and rear support assembly.

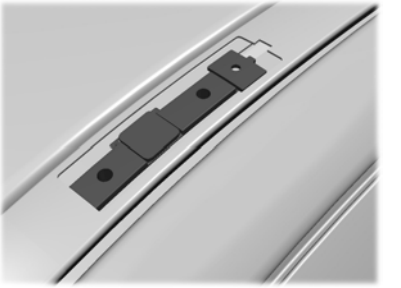

6. Remove the supports and gaskets from the vehicle to expose the accessory mounting plate.
7. Place the trim cover over the mounting plate.

Note: *The mounting plate trim cover needs to be purchased separately. The trim cover is installed when you remove the roof rack.*

Installing the Roof Rack

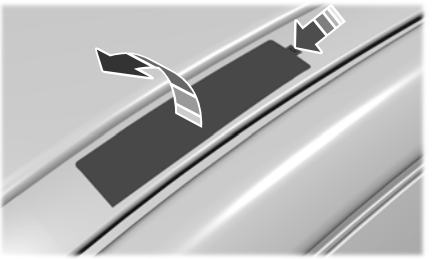

1. Using a trim removal tool, disengage the clip and remove the trim.
2. Store the trim cover components.

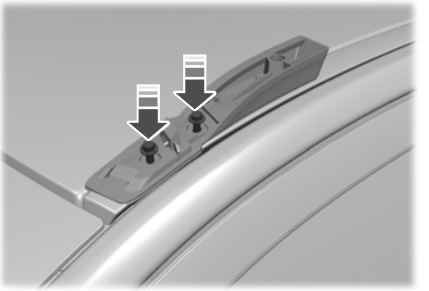

3. Place the roof rack support assembly over the mounting holes.
4. Hand start the front roof rack fasteners.
5. Using a M6 wrench, tighten the front roof rack fasteners. Torque bolts to 10.5 Nm (7.7 lb.ft).
6. Repeat the steps for the rear roof rack support assembly.

7. Insert sliding brackets into the front end of the roof rack.
8. Hold the bracket in place by placing your finger into the roof rack hole and align the roof rack to the support assembly.
9. Secure by sliding the bracket forward into the retention slot.
10. Repeat the steps for the rear of the roof rack.
11. Align the center of the bracket hole to the bolt hole in the support.

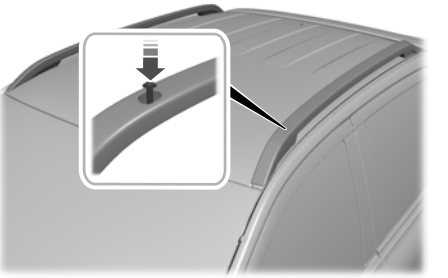

12. Install the supplied M8 Torx bolts using a Torx T40 tool. Torque the bolts to 16 Nm (11.8 lb.ft).

13. Install the roof rack fastener cover, ensuring it clicks into place.
14. Repeat steps 9 through 11 for the rear roof rack fastener.

ADJUSTING A ROOF RACK CROSSBAR

WARNING: Do not attach anything to the crossbars when they are in the folded position.

WARNING: When folding the crossbars down, take care not to get your fingers caught in the mechanism.

Using a Roof Rack integrated Crossbar (If Equipped)

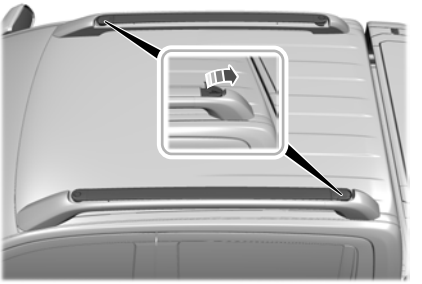

Pull the clip to unlock and lift the crossbar.

Move the crossbar to the new position.

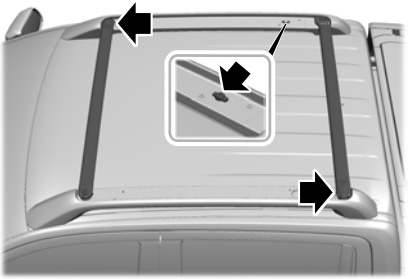

Fit the crossbars at the given location.

Note: *Secure the plug at the given secondary mounting point when the mounting point is not in use.*

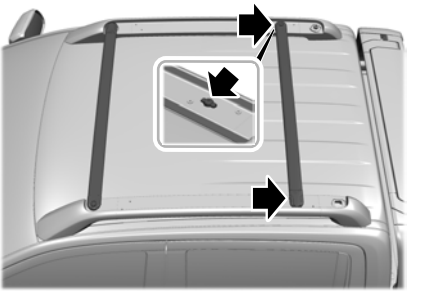

Note: *The crossbar can be moved forward to use with shorter fitments. Secure the plug in the glove compartment when using the crossbar in the secondary mounting point.*

1. Using the M8 wrench in the glove compartment, remove the fastener at the fixed end of the crossbar.
2. To install, place the crossbar over the secondary mounting hole.
3. Hand start the crossbar fastener.
4. Using the M8 wrench, tighten the fastener to 10 Nm (5 lb.ft).

Note: *Install the crossbar at the original rear mounting point to be folded back into the side rail.*

Note: *After using the crossbar, reinstall the plug in the secondary mounting point to prevent debris from entering the hole, making it difficult to secure the crossbar for later use.*

Using a Sports Hoop integrated Crossbar (If Equipped)

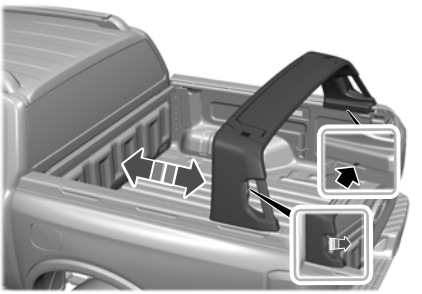

The sports hoop can slide freely across the load box while pressing the integrated lever.

Note: *A red flag is visible on either side when the sports hoop is in the unlocked position.*

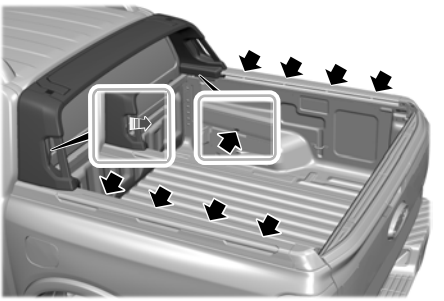

The sports hoop can lock when the integrated lever is released at four different positions.

Note: *Make sure the red flag is not visible on both sides. This means the sports hoop is locked on both sides.*

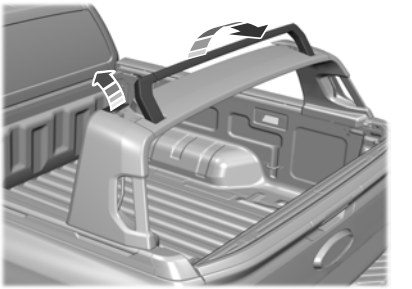

1. Pull the lever to unlock and lift the pop-up crossbar.
2. Pull the lever again to unlock and push the crossbar to its original position.

Note: *Use one lever at a time only on either side, to deploy the pop up crossbar on the sports hoop.*

Note: *The maximum load on the crossbars is 80 kg (176.37 lb).*

Note: *Make sure the crossbars are in the folded position before entering a car wash.*

Note: *When loading longer and wider loads on top of the roof racks and adjustable sports hoop crossbar, allow adequate clearance to the roof antenna.*

Note: *Stow away crossbars when not in use.*

Note: *Do not drive on rough surfaces when carrying long rigid loads across roof racks and flexible rack system.*

Note: *When carrying load across crossbars, it is recommended that a protective material is placed in between to avoid scratching/damage of surface.*

Note: *If pop-up crossbar squeaks during usage, clean the spring mechanism with a degreaser and add lithium grease. For additional information and assistance, contact an authorized dealer.*

ROOF RACK LOAD CAPACITIES

Maximum Recommended Load Amounts

Description	Maximum Recommended Load	
	Ranger Raptor	Ranger Series
When in motion	80 kg (175 lb)	85 kg (187 lb)
When stationary	350 kg (772 lb)	350 kg (772 lb)

Description	Roof Rack system weights
Double Cab Wildtrak	5 kg (11 lb)
RAP Cab Wildtrak	3.2 kg (7 lb)

Note: *The maximum recommended load is based on the load being evenly distributed on the crossbars.*

Note: *Include the weight of the roof rack with any fitted accessories when calculating maximum payload. Read and follow manufacturer instructions when fitting rooftop accessories.*

PICKUP BED PRECAUTIONS

WARNING: Do not allow people or animals in truck beds that have modifications, such as bed covers or slide-in campers, when the engine is running. Exhaust fumes are toxic. Failure to follow this instruction could result in personal injury or death.

WARNING: It is extremely dangerous to ride in a cargo area, inside or outside of a vehicle. In a crash, people riding in these areas are more likely to be seriously injured or killed. Do not allow people to ride in any area of your vehicle that is not equipped with seats and seatbelts. Make sure everyone in your vehicle is in a seat and properly using a seatbelt. Failure to follow this warning could result in serious personal injury or death.

PICKUP BED ANCHOR POINTS

PICKUP BED ANCHOR POINT PRECAUTIONS

WARNING: Always properly secure cargo to prevent shifting cargo or cargo falling from the vehicle. Failure to do so could result in compromised vehicle stability and serious personal injury to vehicle occupants or others.

WARNING: The appropriate loading capacity of your vehicle can be limited either by volume capacity (how much space is available) or by payload capacity (how much weight the vehicle should carry). Once you have reached the maximum payload of your vehicle, do not add more cargo, even if there is space available. Overloading or improperly loading your vehicle can contribute to loss of vehicle control and vehicle rollover.

WARNING: Do not use the load retaining fixtures for towing. Failure to follow this instruction could result in personal injury.

WARNING: Do not exceed the maximum load rating of the load retaining fixtures. Failure to follow this instruction could result in personal injury.

WARNING: Check the load retaining fixtures for damage before using them. Failure to follow this instruction could result in personal injury.

LOCATING THE PICKUP BED ANCHOR POINTS

Pickup Bed Anchor Points

The pickup bed anchor points are in each corner of the pickup bed.

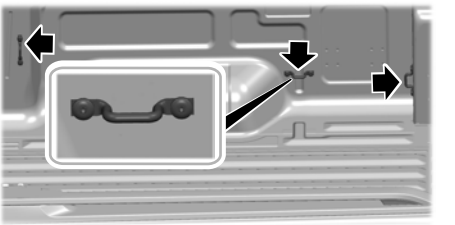

Adjustable Bed Rail

Sliding cleat tie-downs are on each side of the pickup bed.

Ranger (TRA, TRB) Vehicles Built From: 01-11-2024, CG4010en enGBR, Edition date: 202407, DOM

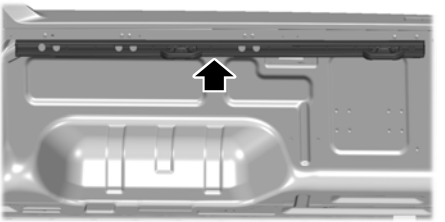

Adjusting the Sliding Cleat Tie-downs

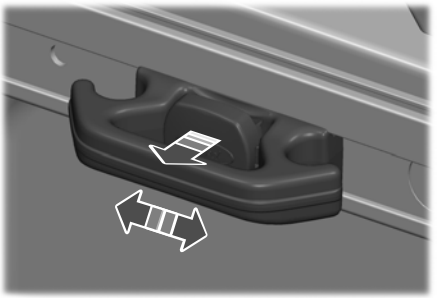

1. Pull the release button on the cleat to release the cleat.
2. Move the cleat to desired position.
3. Lock the cleat to the locking positions on the sliding rails. Locking positions can be identified as holes on the rails.

Note: *The release button returns to the lock position only when the cleat is locked correctly.*

Note: *Do not load the cleat unless it is properly locked onto the rail.*

PICKUP BED ANCHOR POINT LOAD CAPACITIES

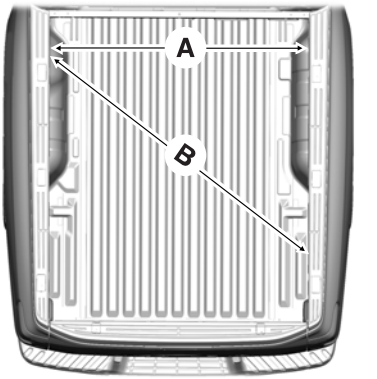

A	B
Maximum force between directly opposed anchor points 125 kg (276 lb).	Maximum force between diagonally opposed anchor points 272 kg (600 lb).

Note: *You could damage the pickup bed walls if you overload the tie-downs.*

Note: *Make sure that you properly balance and secure the cargo load. Failure to do this can cause cargo instability and damage to the box.*

Note: *Do not secure cargo with tie downs connected from the tie-down brackets to the pickup box tie-downs. This could cause the tailgate to detach.*

Adjustable Sliding Cleat Tie-Down Load Capacities

The sliding cleats can be used to secure loads. The maximum recommended load is 250 kg (551 lb) per cleat.

PICKUP BED SLOTS

LOCATING THE PICKUP BED SLOTS

Slots in the pickup bed provide location points for timber to support various loads.

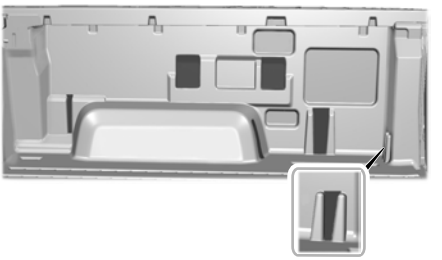

PICKUP BED ACCESS CAPS

WHAT ARE PICKUP BED ACCESS CAPS

The pickup bed has removable access caps that expose structural attachment points used to fit aftermarket accessories.

LOCATING THE PICKUP BED ACCESS CAPS

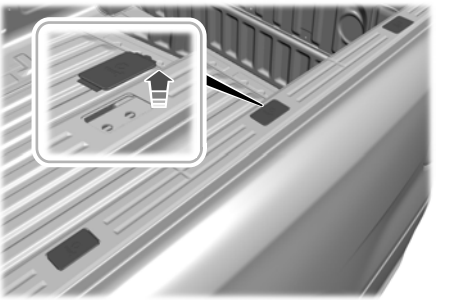

Access caps are located on the sides of the pickup bed. Remove the caps to access the attachment points.

Note: *Replace the access caps when the structural attachment points are no longer being used.*

ROLLER SHUTTER

ROLLER SHUTTER PRECAUTIONS

WARNING: Do not allow people or animals in truck beds that have modifications, such as bed covers or slide-in campers, when the engine is running. Exhaust fumes are toxic. Failure to follow this instruction could result in personal injury or death.

WARNING: Do not place objects on the luggage cover. Failure to follow this instruction could result in personal injury or death in the event of a sudden stop or crash.

Note: *To service the roller shutter, see an authorized dealer. See* ***Cleaning the Roller Shutter*** *(page 511).*

Note: *Secure the loads carried in the pickup bed.*

Note: *Roller shutter may not open or close when the seals are frozen.*

Note: *Make sure the roller shutter is free of any obstruction before you open or close it. For example, snow or ice.*

Note: *Water and dust could enter the pickup bed with the roller shutter closed.*

Note: *To prevent damage due to overheating, the system could become inoperable for a short period if you repeatedly operate the roller shutter in a short period of time.*

ROLLER SHUTTER LIMITATIONS

The roller shutter does not function when:

- The vehicle speed exceeds 5 km/h (3 mph).
- When the transmission selector is not in the park (P) position, on automatic transmission vehicles.

OPENING AND CLOSING THE ROLLER SHUTTER

With the Remote Control

Press the button twice within a few seconds.

Note: *If the roller shutter operates only using the pickup bed button and not the remote control, reset the roller shutter bounce-back. This can occur after a battery disconnect or a software update.*

From the Pickup Bed

Unlock your vehicle, then press the button mounted in the pickup bed to open or close the roller shutter.

The power roller shutter switch is on the power panel or the side of bed liner.

On the Power Panel

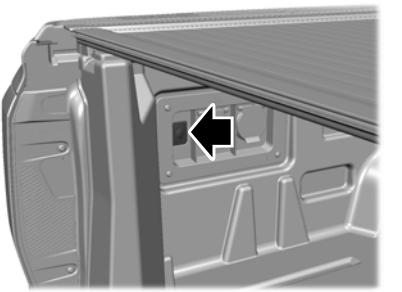

On the Side of Bed Liner

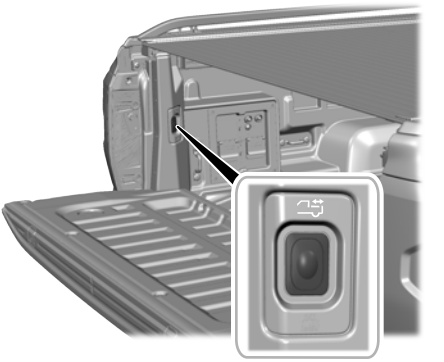

One-Touch Open and Close

Press and release the power roller shutter button. Press again to stop the roller shutter.

Resetting One-Touch

See **Resetting Roller Shutter Bounce-Back** (page 406).

From Inside Your Vehicle

Press the button on the instrument panel.

STOPPING THE ROLLER SHUTTER

- Press the power roller shutter button on the remote control twice within a few seconds. Wait a few seconds to perform another remote control operation to avoid functionality delays.
- Press the power roller shutter button on the instrument panel.
- Use the power roller shutter button in the pickup bed.

Note: *If you stop the roller shutter using any button, the direction of travel reverses on the next activation of the power roller shutter.*

WHAT IS ROLLER SHUTTER BOUNCE-BACK

The roller shutter stops automatically while opening and closing if it comes into contact with an object. It reverses some distance, allowing you to remove the trapped object.

Note: *If the roller shutter stops through bounce back, it continues in the same direction of travel when you press any of the power roller shutter buttons.*

OVERRIDING ROLLER SHUTTER BOUNCE-BACK

If the roller shutter is blocked with debris or seizes at low temperatures due to ice, the bounce back function prevents the roller shutter from closing or opening. You may temporarily override the bounce back function by following the below steps.

1. Press and hold the button on the instrument panel or in the pickup bed, for a minimum of three seconds.
2. To reverse the direction of travel of the roller shutter, release then press and hold the button continuously for a minimum of three seconds.
3. While holding the button, move the roller shutter cover to the desired position.
4. After releasing the button, the system returns the roller shutter to normal mode and the bounce back function reactivates.

Clean the roller shutter if it does not move after completing the steps. When the roller shutter is heavily iced, use a scraper to break the ice between the curtain and the seals to free the roller shutter.

Consult your authorized dealer for further assistance.

Ranger (TRA, TRB) Vehicles Built From: 01-11-2024, CG4010en enGBR, Edition date: 202407, DOM

RESETTING ROLLER SHUTTER BOUNCE-BACK

If the battery becomes discharged or disconnected from the vehicle or after a software update, reset the roller shutter memory as follows.

1. With the roller shutter fully open, press and hold the button until the roller shutter reaches half open.
2. Press and hold the button until the roller shutter reaches fully open. Continue pressing the button for at least four seconds.
3. Release the button.
4. Within ten seconds of releasing the button, press and hold the button until the roller shutter fully closes. Continue to press the button for at least four seconds.
5. If the roller shutter does not open when you press the button, repeat the procedure.

Note: *The bounce back function deactivates until you reset the memory.*

Note: *You can only perform the reset procedure using the button in the pickup bed or on the instrument panel.*

Note: *The roller shutter speed reduces to prevent risk of damage or injury until the memory resets.*

CONNECTING A TRAILER PRECAUTIONS

Consult your local motor vehicle laws for towing a trailer.

See the instructions included with towing accessories for the proper installation and adjustment specifications.

Service your vehicle more frequently if you tow a trailer.

If you use a rental trailer, follow the instructions the rental agency gives you.

When attaching the trailer wiring connector to your vehicle, only use a proper fitting connector that works with the vehicle and trailer functions.

Account for the trailer coupler weight as part of your vehicle load when calculating the total vehicle weight.

Do not exceed the load limits.

Note: *Your vehicle is designed to be used without a weight distributing hitch.*

TOW BALL

TOW BALL PRECAUTIONS

WARNING: Do not cut, drill, weld or modify the trailer hitch. Modifying the trailer hitch could reduce the hitch rating.

WARNING: Always place the tow ball arm in a secure location in your vehicle so it does not become a projectile in a crash. Failure to follow this instruction could result in personal injury or death.

ATTACHING THE TOW BALL ARM

Type 1

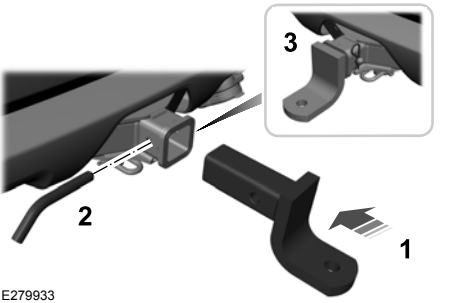

E279933

1. Insert the tow ball arm into the tow bar.
2. Insert the pin.
3. Secure the pin with the clip.

Type 2

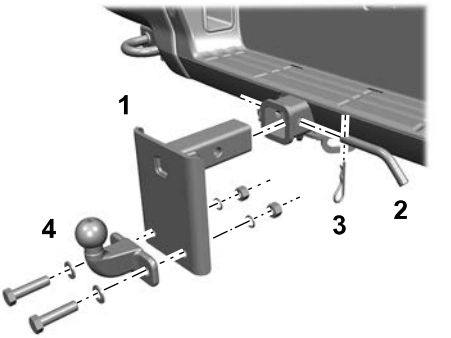

1. Insert the tow ball arm into the tow bar.
2. Insert the pin.
3. Secure the pin with the clip.
4. Tighten the bolts to 161 lb.ft (218 Nm).

Note: *Take special care when fitting the tow ball arm as the safety of the vehicle and trailer depends on this.*

Note: *Do not disassemble or repair the tow ball arm.*

Note: *Your vehicle may not come with a tow ball assembly.*

Driving with a Trailer

Note: *If your vehicle cannot meet any of the following conditions, do not use the tow bar and have it checked by an authorized dealer.*

Note: *Never unlock the tow ball arm with the trailer attached.*

Before operating your vehicle:

- Confirm that the tow ball arm is correctly engaged and locked in place.
- Install the plug into its seat, if applicable.

Anti-Rattle Pinch Bolt Removal

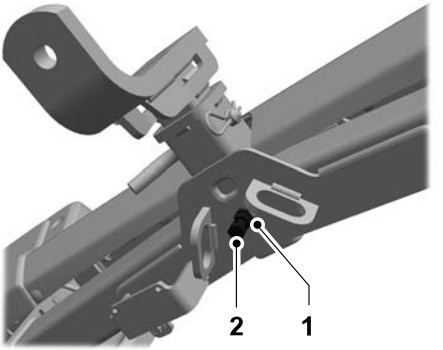

1. Loosen the pinch bolt locknut.
2. Remove the tow coupling anti-rattle pinch bolt.

Note: *When towing, remove the tow coupling anti-rattle pinch bolt from the tow bar.*

Note: *When not towing, replace the anti-rattle pinch bolt, and tighten the locknut. The tightening torque must not exceed 47 Nm (35 lb.ft).*

Driving Without a Trailer

Remove the tow ball arm from the vehicle and keep it securely fastened inside the luggage compartment.

Note: *Remove the tow ball arm from the vehicle when not in use.*

Note: *Remove adapters from the tow bar electrical socket when not in use. Failure to do so may result in corrosion of the socket.*

Maintenance

- Keep the system clean.
- Regularly clean the tow bar electrical socket.
- Periodically lubricate the tow ball mechanism with resin-free grease or oil and the lock with graphite.

CONNECTING A TRAILER

Recognizing a Trailer

1. Attach the trailer and wiring connector to your vehicle.
2. Switch on your vehicle.
3. Set up a profile for the trailer using the touchscreen.

Note: *If your vehicle does not recognize the trailer, press and hold the brake pedal for a few seconds.*

Note: *Trailer profiles store trailer types, dimensions, preferences, trailer specific mileage and fuel economy.*

Note: *Disabling the trailer detection notification makes the default trailer profile active when a connection is detected.*

Ranger (TRA, TRB) Vehicles Built From: 01-11-2024, CG4010en enGBR, Edition date: 202407, DOM

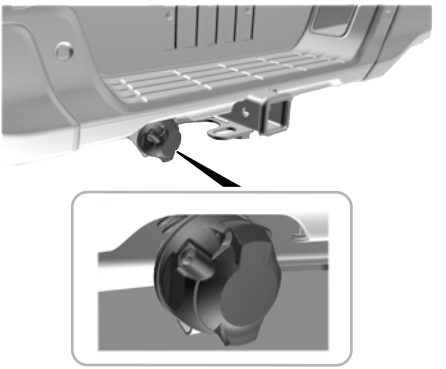

When attaching the trailer wiring connector to your vehicle, only use a proper fitting connector that works with the vehicle and trailer functions.

Safety Chains

Install trailer safety chains to the trailer hitch as recommended by the manufacturer. Cross the chains under the trailer coupler and allow enough slack for turning tight corners. Do not allow the chains to drag on the ground.

Note: *Do not attach safety chains to the bumper. Always connect the safety chains to the frame or hook retainers of your trailer hitch.*

Trailer Connection Checklist

1. Open the towing app using the app launcher.
2. Open the towing settings.
3. Press ***Connection checklist***.

Electronic Park Hold

Applies the electronic parking brake when you shift to park (P).

The electronic park hold button illuminates when activated.

The feature prevents your vehicle from moving in any direction when you are aligned with your trailer coupler and shift to park (P).

Note: *The feature is active for the current key cycle.*

You can also press a zoom button when using the camera views to switch the feature on.

TRAILER LIGHTING CHECK

WARNING: Never connect any trailer lamp wiring to the vehicle's tail lamp wiring; this may damage the electrical system resulting in fire. Contact your authorized dealer as soon as possible for assistance in proper trailer tow wiring installation. Additional electrical equipment may be required.

Perform a trailer light illumination sequence to confirm that all lights are functioning by using the Ford mobile app or the vehicle's touchscreen.

Note: *The Ford mobile app allows one person to confirm that all lights are functioning.*

Performing the Trailer Lighting Check Using the Touchscreen

1. Open the towing app using the app launcher. See **Status Bar** (page 599).
2. Open the towing settings.
3. Press ***Trailer Light Check***.
4. Press ***Start***.

TRAILER BATTERY CHARGE/ TRAILER POWER FEED

This feature allows the trailer's battery to charge under the following situations:

- Your vehicle is in the accessory or engine run position
- If the vehicle's battery voltage is in optimum condition, above 12.5 volts, and the trailer's battery can still hold a charge, or is not too old.

The trailer power feed feature allows for a 12 volt power output on a 13-pin connector when the system detects a trailer.

Note: *Trailer power feed can provide a maximum output rate of 15 amps.*

Note: *Never place more demand than 15 amps of power on the trailer power feed, this may damage the trailer lighting.*

CONNECTING A TRAILER – TROUBLESHOOTING

CONNECTING A TRAILER – INFORMATION MESSAGES

Message	Description
Trailer Disconnected	The system senses a trailer connection becomes disconnected, either intentionally or unintentionally, during a given ignition cycle.
Trailer Wiring Fault	There are certain faults in your vehicle wiring and trailer wiring or brake system.
Trailer Battery Not Charging. See Manual	The vehicle battery voltage is low, there is a fault with your trailer battery or your trailer battery voltage is below 8V.

TOWING A TRAILER PRECAUTIONS

WARNING: Do not exceed the maximum gross combination mass stated on the vehicle identification plate. Failure to follow this instruction could result in personal injury.

WARNING: Do not exceed the maximum front and rear axle loads for your vehicle.

WARNING: Towing trailers beyond the maximum recommended gross trailer weight exceeds the limit of your vehicle and could result in engine damage, transmission damage, structural damage, loss of vehicle control, vehicle rollover and personal injury.

WARNING: Do not exceed the lowest rating capacity for your vehicle or trailer hitch. Overloading your vehicle or trailer hitch can impair your vehicle stability and handling. Failure to follow this instruction could result in the loss of control of your vehicle, personal injury or death.

WARNING: Make sure that the vertical load on the tow ball is between the minimum and maximum recommended weight at all times. Failure to follow this instruction could result in the loss of control of your vehicle, personal injury or death.

WARNING: Do not cut, drill, weld or modify the trailer hitch. Modifying the trailer hitch could reduce the hitch rating.

WARNING: Do not exceed 100 km/h (60 mph). Failure to follow this instruction could result in the loss of control of your vehicle, personal injury or death.

WARNING: The anti-lock brake system does not control the trailer brakes.

WARNING: Do not use the lane centering system when towing a trailer. Failure to follow this instruction could result in the loss of control of your vehicle, personal injury or death.

Towing a trailer also depends on additional systems present in your vehicle. See **Lane Centering Precautions** (page 328).

When towing a trailer:

- Obey country specific regulations for towing a trailer.
- Do not exceed 100 km/h (62 mph) even if a country allows higher speeds.
- Place loads as low as possible and central to the axle of your trailer. For the best stability of the trailer in an unloaded vehicle, place the load in the trailer toward the nose within the maximum nose load.
- Reduce the maximum permitted gross combination weight by 10% for every additional 1,000 m (3,281 ft) in high altitude regions above 1,000 m (3,281 ft).
- Use a low gear when descending a steep downhill slope.
- Do not use four-wheel drive while towing for extended periods of time on dry surfaces. See **Four-Wheel Drive Limitations** (page 258).

The stability of your vehicle to trailer combination depends on the quality of the trailer.

Ranger (TRA, TRB) Vehicles Built From: 01-11-2024, CG4010en enGBR, Edition date: 202407, DOM

TRAILER BRAKE PRECAUTIONS

WARNING: Do not connect a trailer's hydraulic brake system directly to your vehicle's brake system. Your vehicle may not have enough braking power and your chances of having a collision greatly increase.

WARNING: Do not tow a trailer fitted with electric trailer brakes unless your vehicle is fitted with a compatible aftermarket electronic trailer brake controller. Failure to follow this instruction could result in the loss of control of your vehicle, personal injury or death. For additional information and assistance, we recommend that you contact an authorized dealer.

Electric brakes and manual, automatic or surge-type trailer brakes are safe if you install them properly and adjust them to the manufacturer's specifications. The trailer brakes must meet local and federal regulations.

The rating for the tow vehicle's braking system operation is at the gross vehicle weight rating, not the gross combined weight rating.

Certain states require functioning trailer brakes for trailers over a specified weight. Be sure to check state regulations for this specified weight.

Ford Motor Company recommends separate functioning brake systems for trailers weighing more than 750 kg (1,655 lb) when loaded.

TOWING A TRAILER LIMITATIONS

The vehicle's load capacity designation is by weight, not by volume, so you cannot necessarily use all available space when loading a vehicle or trailer.

Towing a trailer also depends on additional systems present in your vehicle. See **Lane Centering Precautions** (page 328). See **Adaptive Cruise Control Precautions** (page 321).

Note: *Your vehicle could have reduced performance when operating at high altitudes and when heavily loaded or towing a trailer. When driving at elevation, to match driving performance as perceived at sea level, reduce gross vehicle weight and gross combination weight by 2% per 300 m (1,000 ft) elevation.*

LAUNCHING OR RETRIEVING A BOAT OR PERSONAL WATERCRAFT

When backing down a ramp during boat launching or retrieval:

- Do not allow the static water level to rise above the bottom edge of the rear bumper.
- Do not allow waves to break higher than 15 cm (6 in) above the bottom edge of the rear bumper.

Exceeding 15 cm (6 in) could allow water to enter vehicle components, causing internal damage to the components and affecting driveability, emissions and reliability.

Note: *Replace the rear axle lubricant anytime the rear axle has been submerged in water.*

Ranger (TRA, TRB) Vehicles Built From: 01-11-2024, CG4010en enGBR, Edition date: 202407, DOM

Note: *Disconnect the trailer wiring connector before backing the trailer into the water.*

Note: *Reconnect the trailer wiring connector after removing the trailer from the water.*

TOWING WEIGHTS AND DIMENSIONS

TOWING WEIGHT CAPACITIES

Trailer Nose Weight

Powertrain	Minimum Nose Weight	Maximum Nose Weight
All	6% of the towed weight	210 kg (463 lb)

Ranger (TRA, TRB) Vehicles Built From: 01-11-2024, CG4010en enGBR, Edition date: 202407, DOM

TOW BAR DIMENSIONS - EXCLUDING: RAPTOR

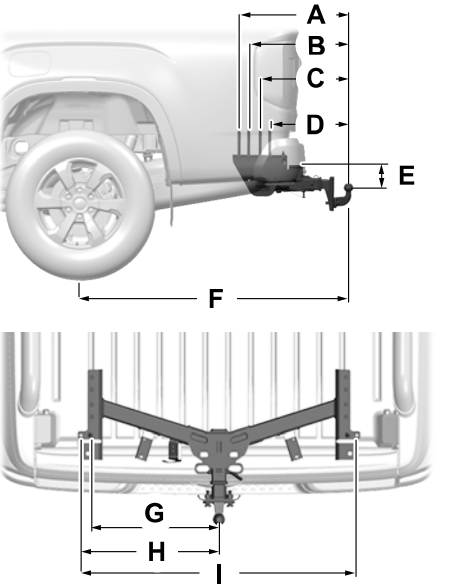

Item	Dimension Description	Dimensions
A	Center of tow ball - center of 4th attachment point.	573.5 ± 5 mm (22.6 ± 0.2 in)
B	Center of tow ball - center of 3rd attachment point.	523.5 ± 5 mm (20.6 ± 0.2 in)
C	Center of tow ball - center of 2nd attachment point.	463.5 ± 5 mm (18.2 ± 0.2 in)
D	Center of tow ball - center of 1st attachment point.	413.5 ± 5 mm (16.3 ± 0.2 in)
E	Attachment point - center of tow ball.	168.8 ± 5 mm (6.6 ± 0.2 in)
	Attachment point - center of tow ball (FX4+, Wildtrack X and plug-in hybrid electric vehicle).	196.5 ± 5 mm (7.7 ± 0.2 in)

Item	Dimension Description	Dimensions
F	Wheel center to center of tow ball.	1,391.51 mm (54.8 in)
G	Center of tow ball - attachment center.	513.5 ± 5 mm (20.2 ± 0.2 in)
H	Center of tow ball - side member.	557 ± 5 mm (21.9 ± 0.2 in)
I	Outside of side member.	1,114 ± 5 mm (43.9 ± 0.2 in)

TOW BAR DIMENSIONS - RAPTOR

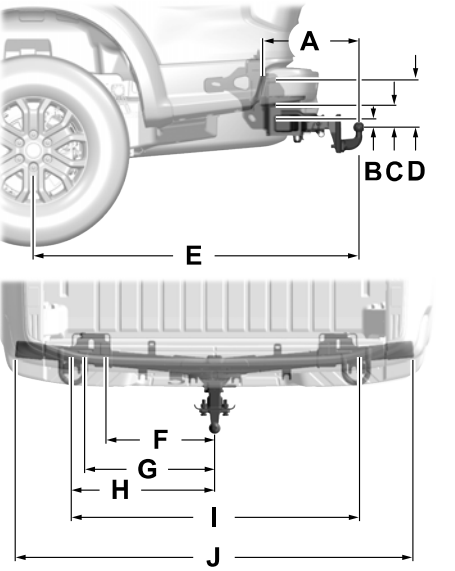

Item	Dimension Description	Dimensions
A	Center of tow ball - center of 1st, 2nd, 3rd and 4th attachment point.	392 ± 5 mm (15.4 ± 0.2 in)
B	Center of tow ball - center of 2nd and 4th attachment point.	47.4 ± 5 mm (1.9 ± 0.2 in)
C	Center of tow ball - center of 3rd attachment point.	95.4 ± 5 mm (3.8 ± 0.2 in)
D	Attachment point - center of tow ball.	193.4 ± 5 mm (7.6 ± 0.2 in)
E	Wheel center to center of tow ball.	1,392.07 mm (54.8 in)
F	Center of tow ball - center of 1st and 2nd attachment point.	469 ± 5 mm (18.5 ± 0.2 in)

Item	Dimension Description	Dimensions
G	Center of tow ball - center of 3rd and 4th attachment point.	550.3 ± 5 mm (21.7 ± 0.2 in)
H	Center of tow ball - side member.	584.9 ± 5 mm (23.0 ± 0.2 in)
I	Outside of side member.	1,169.8 ± 5 mm (46.1 ± 0.2 in)
J	Tow bar width (Gas).	1,641 ± 5 mm (64.6 ± 0.2 in)
	Tow bar width (Diesel).	1,649.7 ± 5 mm (64.9 ± 0.2 in)

TOWING A TRAILER – TROUBLESHOOTING

TOWING A TRAILER – INFORMATION MESSAGES

Message	Details
Trailer Left Turn Lamps Fault Check Lamps	The left-hand trailer turn lamp requires service.
Trailer Right Turn Lamps Fault Check Lamps	The right-hand trailer turn lamp requires service.
Trailer Battery Not Charging See Manual	The vehicle battery voltage is low, there is a fault with your trailer battery or your trailer battery voltage is below 8V.
Trailer Lighting Module Fault See Manual	The system detects a short created by the trailer lamps. Inspect and repair the trailer wiring, or have the system checked as soon as possible.
Trailer Stop Lamps Fault Check Lamps	The trailer stoplamps require service.
Trailer Sway Reduce Speed	The trailer sway control detects trailer sway. Reduce the vehicle's speed.

HOW DOES TRAILER SWAY CONTROL WORK

The system applies the brakes to the individual wheels and reduces engine torque to aid vehicle stability.

If the trailer begins to sway, the stability control lamp flashes and the message ***Trailer sway Reduce speed*** appears in the information display.

Stop your vehicle as soon as it is safe to do so. Check the vertical weight on the tow ball and trailer load distribution.

TRAILER SWAY CONTROL PRECAUTIONS

WARNING: Turning off trailer sway control increases the risk of loss of vehicle control, serious injury or death. Ford does not recommend disabling this feature except in situations where speed reduction may be detrimental (such as hill climbing), the driver has significant trailer towing experience, and can control trailer sway and maintain safe operation.

Note: *This feature only activates when significant trailer sway occurs.*

Note: *This feature does not prevent trailer sway, but reduces it once it begins.*

Note: *This feature cannot stop all trailers from swaying.*

Note: *In some cases, if vehicle speed is too high, the system may activate multiple times, gradually reducing vehicle speed.*

SWITCHING TRAILER SWAY CONTROL ON AND OFF

1. Open the towing app using the app launcher.
2. Open the towing settings.
3. Switch ***Trailer sway control*** on or off.

The system turns on each time you start your vehicle.

WHAT IS TRAILER BACKUP ASSISTANCE

Trailer backup assistance utilizes the control knob on the center console to help you steer a trailer. Turn the control knob in the direction you want the trailer to go and the system steers the vehicle.

HOW DOES TRAILER BACKUP ASSISTANCE WORK

Trailer backup assistance uses a sticker attached to the trailer to detect the trailer angle relative to the towing vehicle and provides instructions, graphics and camera views on the touchscreen.

Note: *Trailer backup assistance only works with conventional trailers, couplers and hitch balls.*

TRAILER BACKUP ASSISTANCE PRECAUTIONS

WARNING: Driving while distracted can result in loss of vehicle control, crash and injury. We strongly recommend that you use extreme caution when using any device that may take your focus off the road. Your primary responsibility is the safe operation of your vehicle. We recommend against the use of any hand-held device while driving and encourage the use of voice-operated systems when possible. Make sure you are aware of all applicable local laws that may affect the use of electronic devices while driving.

WARNING: This system does not automatically brake your vehicle. This system is an extra driving aid. It does not replace your attention and judgment, or the need to apply the brakes. If you do not apply the brakes when necessary, you may collide with another vehicle or other objects.

Note: *The system restricts your vehicle speed to 5 km/h (3 mph) during operation when backing up in a straight line. The speed is reduced when backing in a curve (left or right turn).*

Note: *The system is not a substitute for safe driving practices. Always be aware of your vehicle and trailer combination, and the surrounding environment.*

Note: *The system does not detect or prevent your vehicle or trailer from making contact with obstacles in the surrounding environment.*

Note: *The front end of your vehicle swings out when changing the direction of the trailer.*

Note: *In certain conditions, the trailer could turn faster or the trailer angle could increase more than anticipated. Always monitor the clearance between the trailer and vehicle and the surroundings.*

SETTING UP THE TRAILER BACKUP ASSISTANCE FOR A CONVENTIONAL TRAILER

CONFIGURING THE TRAILER

You must configure a trailer in the system to use trailer backup assistance. This is a one-time setup process and the trailer information is saved in the system for the next time you use that trailer.

Ranger (TRA, TRB) Vehicles Built From: 01-11-2024, CG4010en enGBR, Edition date: 202407, DOM

The following illustration shows examples of conventional trailers. Fifth wheel and gooseneck trailers are not supported.

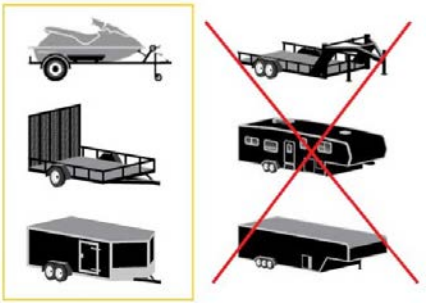

Positioning the Trailer

Hitch the trailer to your vehicle and connect the electrical wiring harness. Check to make sure that the wiring is working. See **Connecting a Trailer** (page 407).

Note: *Trailer Backup Assistance continues to work if the trailer wiring harness is disconnected (for example prior to backing down a boat ramp). Reconnect the wiring as soon as possible.*

Park your vehicle and hitched trailer on a level surface.

For best results, make sure that your trailer rides level with the ground when you hitch your vehicle. See **Connecting a Trailer** (page 407).

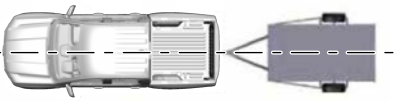

Make sure that the trailer and your vehicle are in line with each other. You can do this by putting the transmission in drive (D) and pulling straight forward.

Configuring the Trailer in the Touchscreen

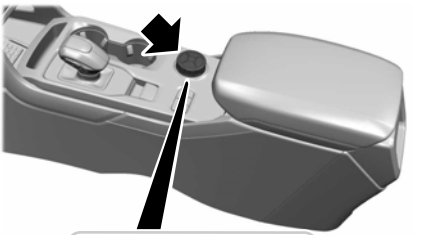

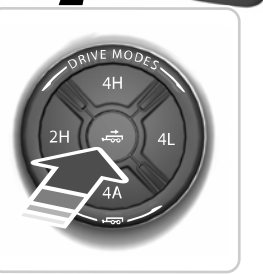

1. Press the button to switch the system on.
2. Press ***Add trailer*** on the touchscreen.
3. Follow the directions on the touchscreen to enter the trailer name and trailer type, then proceed to the sticker setup.

APPLYING THE TRAILER REVERSING AID STICKER

Place the sticker in an area visible by the rear view camera. The entire sticker must be within 10–48 cm (4–19 in) from the center of the hitch ball, as shown in the following illustration.

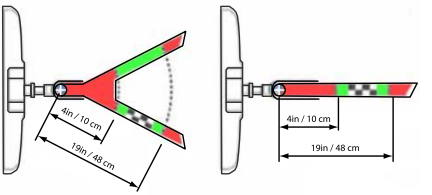

Use the supplied sticker placement card, a tape measure and pen to carefully mark the area to attach the sticker. Make sure the entire sticker is within the green zone between the two arcs or distance markers on the diagram, and is also visible in the rear view camera display.

Once you have found the correct location, place the sticker.

Note: *Make sure nothing obstructs the rear view camera's view of the sticker such as a jack handle or wiring.*

Note: *Position the sticker on a flat, dry and clean horizontal surface. For best results, apply the sticker when temperatures are above 0°C (32°F).*

Note: *Do not move stickers after placing them. Do not reuse any stickers if removed.*

Note: *You can purchase additional stickers through your authorized dealer.*

CALIBRATING THE SYSTEM

Calibrating the system requires driving forward and turning left or right. Follow the instructions on the touchscreen to complete the calibration process.

Note: *To calibrate the system, you need an area where you can safely drive forward and turn left or right. An open parking lot is an ideal place to perform the calibration.*

Note: *You need to complete at least a 90° turn, and longer trailers could require a 180° turn. Camera trailer tracking requires the system to locate the hitch ball as well as determine the trailer length. Some trailers could require you to drive straight then turn multiple times before calibration completes. The touchscreen provides instructions and notifies you when calibration completes. Making tighter turns (when requested) helps the calibration process.*

Note: *Keep the steering wheel straight when instructed by the touchscreen. If the steering wheel is in a turned position during this instruction, the calibration pauses.*

Ranger (TRA, TRB) Vehicles Built From: 01-11-2024, CG4010en enGBR, Edition date: 202407, DOM

Note: *During calibration, the system determines the trailer length. The system supports trailer lengths of 1.83–6.1 m (6–20 ft) distance from the hitch point to the center of the axle or axles. The system is designed to work with drawbars (tow ball mounts) that have a license plate to hitch ball center measurement of 26–43 cm (10–17 in) when installed. Do not use drawbars or trailers that have a length outside of this range as the system performance degrades and could cause improper system function.*

Note: *The touchscreen shows if you are going too slow or fast. Calibration pauses if the speed is outside the required range of 4–15 km/h (2–9 mph).*

Note: *Do not calibrate the system at night. The calibration process may not be completed, or the system may not work as expected.*

SWITCHING TRAILER BACKUP ASSISTANCE ON AND OFF

Press the button and use the touchscreen to select the connected trailer.

Note: *A trailer must be configured to use trailer backup assistance. See* ***Configuring the Trailer*** *(page 419).*

Note: *If you use the steering wheel when using trailer backup assistance, the system turns off and a message displays in the touchscreen.*

Note: *If the trailer was connected just prior to turning the system on, you may need to drive forward to initialize the system. Follow the instructions on the touchscreen to activate the system.*

USING THE TRAILER BACKUP ASSISTANCE CONTROLLER

Use the control knob to steer the trailer. Take your hands off the steering wheel and turn the control knob instead. The control knob acts as the steering control for the trailer.

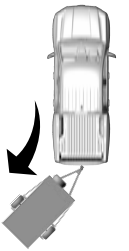

Turn and hold counterclockwise to make the trailer go left.

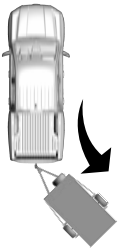

Turn and hold clockwise to make the trailer go right.

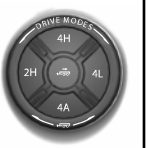

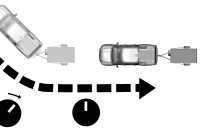

Release the knob when the trailer is moving in the direction you want.

Note: *The more you turn the knob, the sharper the trailer turns.*

Note: *Quickly turning and releasing the knob results in a jerky movement of the vehicle.*

Note: *You may have to use the knob to correct the trailer direction when attempting to move the trailer straight back under some conditions.*

USING THE TRAILER BACKUP ASSISTANCE VIEWS

Up to six camera views could be available when using trailer backup assistance. Use the view that helps you the most when reversing your vehicle and trailer.

Note: *The rear view camera view is available on all vehicles with the trailer backup assist feature. Additional views are available on vehicles equipped with the trailer reverse guidance feature.*

360º camera view. Shows a 360º view on the right-hand side of the touchscreen with a rear camera view on the left-hand side of the touchscreen.

Rear view camera view. Shows your trailer hitch or what is directly behind your vehicle.

Trailer AUX camera view (if equipped). Shows a rear view camera image of what is behind your trailer.

Note: *This view also provides a picture-in-picture view.*

Trailer reverse guidance view. Shows you a view of the sides of your truck and the trailer. In auto mode, this view moves as the trailer moves so that you do not have to adjust the camera as you turn. Left and right arrows let you see other camera views.

Picture-in-picture view (if equipped). Shows a main view and a secondary view when in trailer AUX camera view.

Note: *Picture-in-picture is on by default and cannot be switched off.*

Swap. Press to swap between picture-in-picture views.

Auto
Auto. Press to return to auto view.

Note: *Auto mode is the default setting.*

Hitch Angle Graphic

The hitch angle graphic shows a small representation of your truck and trailer with visual feedback to help you monitor the trailer. The graphic shows two different colored lines for the trailer hitch angle. A black line shows you where your trailer is in relation to your vehicle. The white line represents the amount the trailer can turn based on knob input.

The graphic shows a yellow and red zone for the hitch angle to warn you of a high angle condition that could require you to pull forward to reduce the hitch angle. The angle limits for each zone vary based on the trailer length.

The yellow zone indicates you are approaching the maximum controllable trailer angle for the system. When the trailer enters this zone, it is more difficult to reduce the trailer turn when backing up. It may be necessary to put your vehicle into drive (D) and pull forward to get the truck and trailer back in line.

The red zone indicates you have exceeded the maximum controllable trailer angle for the system. Immediately stop reversing. Put your vehicle into drive (D) and pull forward until the trailer is no longer in the red zone.

Setting the Trailer Angle Limit

1. From the Apps menu, press the Towing button.
2. Press the saved trailer you want to change.
3. Press Pro Trailer Backup Assist.
4. Press Trailer Angle Limit.
5. Press a setting.

Normal Control Angle

Default setting. This provides a balanced limit that returns from a turn to straight backing with minimal change to the trailer direction.

Max Control Angle

Increases the trailer angle limit close to the maximum controllable angle to allow sharper turns but also causes more change in the trailer direction when straightening out from a turn.

Ranger (TRA, TRB) Vehicles Built From: 01-11-2024, CG4010en enGBR, Edition date: 202407, DOM

TRAILER BACKUP ASSISTANCE – TROUBLESHOOTING

TRAILER BACKUP ASSISTANCE – INFORMATION MESSAGES

Message	Description
Detecting trailer Please wait...	Displays when the system turns on and is initializing.
Pro Trailer Backup Assist™ System is not available	A condition exists that prevents the system from turning on. If the message continues to display, visit your authorized dealer to have your vehicle checked.
Pro Trailer Backup Assist™ Driving required to initialize steering Press knob to exit	The steering system needs to learn internal parameters to fully enable the feature. Drive your vehicle straight forward above 40 km/h (25 mph) for approximately 5 minutes.
Pro Trailer Backup Assist™ Stop now Maximum trailer angle Press knob to exit	Displays when you reach the maximum controllable trailer angle for the system. Place your vehicle in drive (D) and pull forward to get the truck and trailer back to an in-line position. If this message consistently displays, you may need to repeat the trailer calibration. Delete the trailer from the system and repeat the setup and calibration process.
Stop now. Deactivated by trailer angle.	Displays when you exceed the maximum controllable trailer angle for the system. Place your vehicle in drive (D) and pull forward to get your vehicle and trailer back to an in-line position, then activate the system by selecting the connected trailer and following the instructions on the touchscreen. If this message consistently displays, you may need to repeat the trailer setup and calibration. Delete the trailer from the system and repeat the setup and calibration process.
Pro Trailer Backup Assist™ Stop now Take control of steering wheel	Displays when the system can no longer steer the vehicle and you must take over steering.

Ranger (TRA, TRB) Vehicles Built From: 01-11-2024, CG4010en enGBR, Edition date: 202407, DOM

Message	Description
Pro Trailer Backup Assist™ Trailer not detected. Shift to Park Press knob to exit	These messages display when the system does not detect the trailer. Make sure the rear camera is clean, and the sticker is clearly visible in the camera image. You can also move the trailer forward or backward to change the trailer position and lighting conditions. If these messages continue to display, visit your authorized dealer to have your vehicle checked.
Pro Trailer Backup Assist™ Trailer not detected. Refer to owner's manual. Press knob to exit	
Pro Trailer Backup Assist™ Trailer not detected Pull forward to initialize Press knob to exit	This message displays when the camera system cannot detect the trailer and requires trailer movement to enable trailer detection. Drive forward above 3 km/h (2 mph) to initialize the system.
Pro Trailer Backup Assist™ Stop now System not active Press knob to exit	Displays when your vehicle is backing up but the system is not activated. Select the connected trailer on the touchscreen and follow the instructions to activate the system. This message also displays when you back up during the calibration process.
Pro Trailer Backup Assist™ Drive backward slowly Turn knob to steer Press knob to exit	Displays when the system turns on and is available to use.

TRAILER BACKUP ASSISTANCE – FREQUENTLY ASKED QUESTIONS

Why does the trailer not reverse straight?

- Factors such as the hitch connection, road camber, road slope and trailer suspension could influence how straight the system can reverse the trailer when the control knob is not turned. You can compensate for the trailer drifting to the right or left by slowly turning the knob until the trailer is following your desired path and then holding the knob in that position.

What does it mean if the system remains on one message for an extended time during calibration when setting up the system with the sticker?

- The camera could need to be cleaned, the sticker could be blocked, the drawbar could be outside the allowed range of 10–48 cm (4–19 in) or you could need to move to a different area to change the lighting and background. Verify the sticker is in the proper location. See **Applying the Trailer Reversing Aid Sticker** (page 421). You can move to a different area or change the direction you are driving or setup the system at a different time of day. Some trailers are not compatible with the sticker and camera system.

What does it mean if the system pauses during calibration?

- There could be steering input or trailer movement during the straight drive portion of the calibration process.

What does it mean if the system displays hold steering steady during turn?

- Part of the calibration process for the sticker setup requires a steady turn. If you are continually moving the steering wheel during the turn, this delays the calibration process. To enable the calibration process, hold the steering wheel at the same position when turning.

What does it mean if the system displays that it is not available?

- There could be a sub-system that the system uses that is not correctly operating or there could be a battery voltage issue. If the system continues to display it is not available, visit your authorized dealer to have your vehicle checked.

What does it mean if the system displays that driving is required to initialize steering?

- The steering system needs to learn internal parameters to fully turn on the feature. Drive your vehicle straight forward above 40 km/h (25 mph) for approximately 5 minutes. This could also occur when your vehicle is new, there is a battery voltage issue or if the steering system has been serviced.

Ranger (TRA, TRB) Vehicles Built From: 01-11-2024, CG4010en enGBR, Edition date: 202407, DOM

What does it mean if the system requires you to pull forward to initialize?

- This occurs when the vehicle has not moved during the current key cycle after you connect and select the trailer in the touchscreen or you operate the system at speeds below 1 km/h (1 mph) for an extended period of time. Drive forward above 3 km/h (2 mph) and the system indicates when it initializes.

What does it mean if the trailer is at its maximum angle or the system deactivated by trailer angle?

- You are at the maximum controllable trailer angle for the system. Place your vehicle in drive (D) and pull forward to get the truck and trailer back to an in-line position. If this message consistently displays, this could indicate the sticker is incorrectly placed, the trailer needs to be recalibrated or the drawbar or the trailer dimensions are outside of the supported range. The system is designed to work with drawbars that have a license plate to hitch ball center measurement of 26–43 cm (10–17 in) when installed. The system is designed to work with trailers that have a hitch point to center of the axle or axles measurement of 1.83–6.1 m (6–20 ft). Do not use drawbars or trailers that have a length outside of this range as the system performance degrades and could cause improper system function. Check that the correct trailer is selected in the touchscreen. Verify the sticker is placed according to the instructions. Then, delete the trailer from the system and repeat the setup process to calibrate the trailer.

What does it mean when the system tells you to take control of the steering wheel?

- The system is no longer steering the vehicle and you must take over steering. There are four reasons the system could display this message:

1. You have touched the steering wheel when the system is steering. Avoid touching the wheel during system operation.
2. You have exceeded the maximum forward speed of 40 km/h (24.9 mph) for the feature to re-activate when you shift to Reverse.
3. The system no longer detects the trailer.
4. An internal condition for system operation is not met that requires your vehicle to return to manual control of the steering.

What does it mean if the system does not detect a trailer that is setup with a sticker?

- The system requires a clear view of the sticker placed on the trailer. You must keep the camera lens and sticker clean for the system to correctly operate. If the system cannot initially detect the trailer, it could be necessary for you to change the lighting conditions by moving your vehicle and trailer or waiting until the conditions change. See **Applying the Trailer Reversing Aid Sticker** (page 421). Some trailers and couplers are not compatible with the sticker and camera system.

Note: *The system is designed to be used with the same trailer connection every time you choose the trailer from the touchscreen. When using a different drawbar (tow ball mount) or a different pin hole on drawbars with more than one, connecting the drawbar to your vehicle affects the trailer position and you may need to repeat the trailer setup and calibration process.*

WHAT IS TRAILER REVERSE GUIDANCE

Trailer reverse guidance provides views and graphics on the touchscreen to help you steer your vehicle when you backup a trailer.

HOW DOES TRAILER REVERSE GUIDANCE WORK

Trailer reverse guidance uses a sticker attached to the trailer to detect the trailer angle relative to the towing vehicle and provides instructions, graphics and camera views on the touchscreen.

Note: *Trailer reverse guidance only works with conventional trailers and couplers and on cars with a 360 degree camera system.*

TRAILER REVERSE GUIDANCE PRECAUTIONS

WARNING: Driving while distracted can result in loss of vehicle control, crash and injury. We strongly recommend that you use extreme caution when using any device that may take your focus off the road. Your primary responsibility is the safe operation of your vehicle. We recommend against the use of any hand-held device while driving and encourage the use of voice-operated systems when possible. Make sure you are aware of all applicable local laws that may affect the use of electronic devices while driving.

WARNING: This system does not automatically brake your vehicle. This system is an extra driving aid. It does not replace your attention and judgment, or the need to apply the brakes. If you do not apply the brakes when necessary, you may collide with another vehicle or other objects.

Note: *The system is not a substitute for safe driving practices. Always be aware of your vehicle and trailer combination, and the surrounding environment.*

Note: *The system does not detect or prevent your vehicle or trailer from making contact with obstacles in the surrounding environment.*

Note: *The front end of your vehicle swings out when changing the direction of the trailer.*

Note: *In certain conditions, the trailer could turn faster or the trailer angle could increase more than anticipated. Always monitor the clearance between the trailer and vehicle and the surroundings.*

SETTING UP TRAILER REVERSE GUIDANCE FOR A CONVENTIONAL TRAILER

CONFIGURING THE TRAILER

You must configure a trailer in the system to use trailer reverse guidance. This is a one-time setup process and the trailer information is saved in the system for the next time you use that trailer.

The system only works with conventional trailers. It does not work with other types including fifth-wheel and gooseneck. The following illustration shows examples of conventional trailers on the left-hand side.

Note: *Trailer reverse guidance camera views are available with no trailer setup. However, complete functionality including graphics and automatic view switching is enabled by setup. Setup is required to enable trailer backup assistance.*

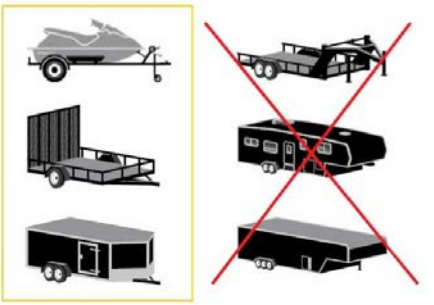

Positioning the Trailer

Hitch the trailer to your vehicle and connect the electrical wiring harness. Check to make sure that the wiring is working. See **Connecting a Trailer** (page 407).

Park your vehicle and hitched trailer on a level surface.

For best results, make sure that your trailer rides level with the ground when you hitch your vehicle. See **Connecting a Trailer** (page 407).

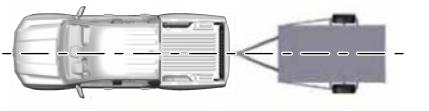

Make sure that the trailer and your vehicle are in line with each other. You can do this by putting the transmission in drive (D) and pulling straight forward.

Configuring the Trailer in the Touchscreen

1. Shift to reverse (R).
2. Press the camera menu view button.
3. Press the trailer view icon.
4. Press ***Add trailer***.
5. Follow the directions on the touchscreen to enter the trailer name and trailer type, then proceed to the sticker setup.

APPLYING THE TRAILER REVERSE AID STICKER

Place the sticker in an area visible by the rear view camera. The entire sticker must be within 10–48 cm (4–19 in) from the center of the hitch ball, as shown in the following illustration.

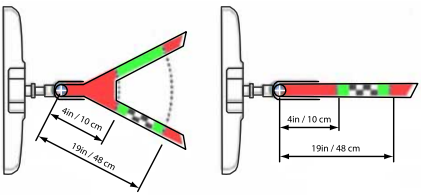

Use the supplied sticker placement card, a tape measure and pen to carefully mark the area to attach the sticker. Make sure the entire sticker is within the green zone between the two arcs or distance markers on the diagram, and is also visible in the rear view camera display.

Once you have found the correct location, place the sticker.

Note: *Make sure nothing can obstruct the rear view camera's view of the sticker such as a jack handle or wiring.*

Note: *Position the sticker on a flat, dry and clean horizontal surface. For best results, apply the sticker when temperatures are above 0°C (32°F).*

Note: *Do not move stickers after placing them. Do not re-use any stickers if removed.*

Note: *You can purchase additional stickers through your authorized dealer.*

CALIBRATING THE SYSTEM

Calibrating the system requires driving forward and turning left or right. Follow the instructions on the touchscreen to complete the calibration process.

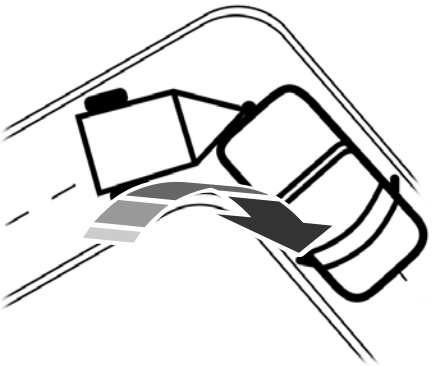

Note: *To calibrate the system, you need an area where you can safely drive forward and turn left or right. An open parking lot is an ideal place to perform the calibration.*

Note: *Keep the steering wheel straight when instructed to by the touchscreen. If the steering wheel is in a turned position during this instruction, the calibration pauses.*

Note: *During calibration, the system determines the trailer length. The system supports trailer lengths of 1.83–6.1 m (6–20 ft) distance from the hitch point to the center of the axle or axles. The system is designed to work with drawbars (tow ball mounts) that have a license plate to hitch ball center measurement of 26–43 cm (10–17 in) when installed. Do not use drawbars or trailers that have a length outside of this range as the system performance degrades and could cause improper system function.*

Note: *The touchscreen shows if you are going too slow or fast. Calibration pauses if the speed is outside the required range of 4–15 km/h (2–9 mph).*

Note: *You need to complete at least a 90° turn, and longer trailers could require a 180° turn. Camera trailer tracking requires the system to locate the hitch ball as well as determine the trailer length. Some trailers could require you to drive straight then turn multiple times before calibration completes. The touchscreen provides instructions and notifies you when calibration completes.*

Note: *Do not calibrate the system at night. The calibration process may not be completed, or the system may not work as expected.*

Ranger (TRA, TRB) Vehicles Built From: 01-11-2024, CG4010en enGBR, Edition date: 202407, DOM

SWITCHING TRAILER REVERSE GUIDANCE ON AND OFF

Shift into reverse (R), press the rear camera menu view button to expand the menu, press the trailer icon and use the touchscreen to select the connected trailer.

Note: *If the trailer was connected just prior to turning the system on, you may need to drive forward to initialize the system. Follow the instructions on the touchscreen to activate the system.*

USING TRAILER REVERSE GUIDANCE VIEWS

Up to six camera views could be available when using trailer reverse guidance. Use the view that helps you the most when reversing your vehicle and trailer.

360º camera view. Shows a 360º view on the right-hand side of the touchscreen with a rear camera view on the left-hand side of the touchscreen.

Rear view camera view. Shows your trailer hitch or what is directly behind your vehicle.

Trailer AUX camera view. Shows a rear view camera image of what is behind your trailer.

Note: *This view also provides a picture-in-picture view.*

Trailer reverse guidance view. Shows you a view of the sides of your truck and the trailer. In auto mode, this view moves as the trailer moves so that you do not have to adjust the camera as you turn. Left and right arrows let you see other camera views.

Straight backup mode. Shows which way to turn your steering wheel to keep the trailer straight. Use this view when you want to keep your trailer completely in line with your truck.

Note: *This view also provides a picture-in-picture view.*

Note: *It may be necessary to shift your vehicle into drive (D), pull forward and straighten out the vehicle and trailer before engaging straight backup mode.*

Picture-in-picture view. Shows a main view and a secondary view when in trailer AUX camera view.

Note: *Picture-in-picture is on by default and cannot be switched off.*

Swap. Press to swap between picture-in-picture views.

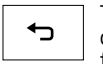
This takes you back to the 360º camera system and out of the trailer reverse guidance feature.

Auto. Press to return to auto view.

Note: *Auto mode is the default setting.*

Hitch Angle Graphic

The hitch angle graphic shows a small representation of your truck and trailer with visual feedback to help you monitor the trailer. The graphic shows two different colored lines for the trailer hitch angle. A black line shows you where your trailer is in relation to your vehicle. The white line represents the amount the trailer can turn based on steering wheel position.

The graphic shows a yellow and red zone for the hitch angle to warn you of a high angle condition that could require you to pull forward to reduce the hitch angle. The angle limits for each zone vary based on the trailer length.

Ranger (TRA, TRB) Vehicles Built From: 01-11-2024, CG4010en enGBR, Edition date: 202407, DOM

The yellow zone indicates you are approaching the maximum controllable trailer angle for the system. When the trailer enters this zone, it is more difficult to reduce the trailer turn when backing up. It may be necessary to put your vehicle back into drive (D) and pull forward to get the truck and trailer back to an in-line position.

The red zone indicates you have exceeded the maximum controllable trailer angle for the system. Immediately stop reversing. Put your vehicle into drive (D) and pull forward until the trailer is no longer in the red zone.

TRAILER REVERSE GUIDANCE – TROUBLESHOOTING

TRAILER REVERSE GUIDANCE – INFORMATION MESSAGES

Message	Description
Detecting trailer Please wait...	Displays when the system turns on and is initializing.
Trailer Reverse Guidance System is not available	A condition exists that prevents the system from turning on. If the message continues to display, visit your authorized dealer to have your vehicle checked.
Trailer reverse guidance Driving required to initialize steering Press OK to exit	The steering system needs to learn internal parameters to fully enable the feature. Drive your vehicle straight forward above 40 km/h (25 mph) for approximately 5 minutes.
Stop now. Deactivated by trailer angle.	Displays when you exceed the maximum controllable trailer angle for the system. Place your vehicle in drive (D) and pull forward to get your vehicle and trailer back to an in-line position, then activate the system by selecting the connected trailer and following the instructions on the touchscreen. If this message consistently displays, you may need to repeat the trailer setup and calibration. Delete the trailer from the system and repeat the setup and calibration process.
Trailer reverse guidance Trailer not detected. Refer to owner's manual. Press OK to exit	Displays when the system does not detect the trailer. Make sure the rear camera is clean, and the sticker is clearly visible in the camera image. You can also move the trailer forward or backward to change the trailer position and lighting conditions. If this message continues to display, visit your authorized dealer to have your vehicle checked.

Message	Description
Trailer reverse guidance Trailer not detected Pull forward to initialize Press OK to exit	This message displays when the camera system cannot detect the trailer and requires trailer movement to enable trailer detection. Drive forward above 3 km/h (2 mph) to initialize the system.

TRAILER REVERSE GUIDANCE – FREQUENTLY ASKED QUESTIONS

What does it mean if the same message displays for an extended time during calibration when setting up the system with the sticker?

The camera could need to be cleaned, the sticker could be blocked, the drawbar could be outside the allowed range of 10–48 cm (4–19 in) or you could need to move to a different area to change the lighting and background. Verify the sticker is in the proper location. See **Applying the Trailer Reverse Aid Sticker** (page 431). You can move to a different area or change the direction you are driving or set up the system at a different time of day. Some trailers are not compatible with the sticker and camera system.

What does it mean if the system pauses during calibration?

There could be steering input or trailer movement during the straight drive portion of the calibration process.

What does it mean if the system displays hold steering steady during turn?

Part of the calibration process for the sticker setup requires a steady turn. If you are continually moving the steering wheel during the turn, this delays the calibration process. To enable the calibration process, hold the steering wheel at the same position when turning.

What does it mean if the system displays that it is not available?

There could be a sub-system that the system uses that is not correctly operating or there could be a battery voltage issue. If the system continues to display it is not available, visit your authorized dealer to have your vehicle checked.

What does it mean if the system displays that driving is required to initialize steering?

The steering system needs to learn internal parameters to fully turn on the feature. Drive your vehicle straight forward above 40 km/h (25 mph) for approximately 5 minutes. This could also occur when your vehicle is new, there is a battery voltage issue or if the steering system has been serviced.

What does it mean if the system requires you to pull forward to initialize?

This occurs when the vehicle has not moved during the current key cycle after you connect and select the trailer in the touchscreen or you operate the system at speeds below 1 km/h (1 mph) for an extended period of time. Drive forward above 3 km/h (2 mph) and the system indicates when it initializes.

Ranger (TRA, TRB) Vehicles Built From: 01-11-2024, CG4010en enGBR, Edition date: 202407, DOM

What does it mean if the trailer is at its maximum angle or the system deactivated by trailer angle?

You are at the maximum controllable trailer angle for the system. Place your vehicle in drive (D) and pull forward to get the truck and trailer back to an in-line position. If this message consistently displays, this could indicate the sticker is incorrectly placed, the trailer needs to be recalibrated or the drawbar or the trailer dimensions are outside of the supported range. The system is designed to work with drawbars that have a license plate to hitch ball center measurement of 26–43 cm (10–17 in) when installed. The system is designed to work with trailers that have a hitch point to center of the axle or axles measurement of 1.83–6.1 m (6–20 ft). Do not use drawbars or trailers that have a length outside of this range as the system performance degrades and could cause improper system function. Check that the correct trailer is selected in the touchscreen. Verify the sticker is placed according to the instructions. Then, delete the trailer from the system and repeat the setup process to calibrate the trailer.

What does it mean if the system does not detect a trailer that is setup with a sticker?

The system requires a clear view of the sticker placed on the trailer. You must keep the camera lens and sticker clean for the system to correctly operate. If the system cannot initially detect the trailer, it could be necessary for you to change the lighting conditions by moving your vehicle and trailer or waiting until the conditions change. See **Applying the Trailer Reverse Aid Sticker** (page 431). Some trailers are not compatible with the sticker and camera system.

Note: *The system is designed to be used with the same trailer connection every time you choose the trailer from the touchscreen. When using a different drawbar (tow ball mount) or a different pin hole on drawbars with more than one, connecting the drawbar to your vehicle affects the trailer position and you may need to repeat the trailer setup and calibration process.*

BASIC OFF-ROAD DRIVING TECHNIQUES

Off-road Driving Hints

Before taking your vehicle off-roading, perform a basic inspection to make sure your vehicle is in good working condition.

We recommend that you always use at least two vehicles while off-roading. The buddy system helps make sure that help is close at hand should a vehicle become stuck or damaged. It is also wise to take supplies such as a first aid kit, water, tow strap, cell phone with you.

The following are hints for safe off-road driving:

- Steer, brake and accelerate in a smooth controlled manner. Avoid jerky, unsteady movements.
- Look ahead on your route noting upcoming obstacles, or any other factors that may indicate a change in available traction and adjust the vehicle speed and route accordingly.
- If the front or rear suspension is bottoming out, or you encounter excessive contact with the skid-plates, reduce the vehicle speed to avoid potential damage to your vehicle.
- We recommend that you use vehicle communication, such as, turn signals, brake lights, and hazard flashers to alert other drivers of what you intend to do next, and of obstacles that could cause potential vehicle damage.
- Always keep available ground clearance in mind and pick a route that minimizes the risk of catching the underside of the vehicle on an obstacle.
- When negotiating low speed obstacles, applying light brake pressure in conjunction with the throttle helps prevent your vehicle from jerking and allows you to negotiate the obstacle in a more controlled manner. Using four-wheel drive low (4L) will also help with this.

Crossing Obstacles

- Review the path ahead before attempting to cross an obstacle. It is best if you view the obstacle from outside your vehicle so that you have a good understanding of terrain conditions both in front of and behind the obstacle.
- Approach obstacles slowly.
- If you cannot avoid a large obstacle such as a rock, choose a path that places the rock directly under the tire rather than the undercarriage of your vehicle. This helps prevent damage to your vehicle.
- Cross ditches and washouts at a 45º angle, allowing each wheel to independently cross the obstacle.

Climbing A Hill

WARNING: Extreme care should be used when steering the vehicle in reverse down a slope so as not to cause the vehicle to swerve out of control.

Do not drive over the crest of a hill without seeing what conditions are on the other side. Do not drive in reverse over a hill without the aid of an observer.

Ranger (TRA, TRB) Vehicles Built From: 01-11-2024, CG4010en enGBR, Edition date: 202407, DOM

- Always attempt to climb a steep hill along the fall line of the slope and not diagonally.
- If the vehicle is unable to make it up the hill, DO NOT attempt to turn back down the slope. Place the vehicle in low range and slowly back down in reverse.
- When descending a steep slope, select low gear and engage hill descent control. Use the accelerator and brake pedals to control your descent speed.

Note: *Hill descent control is functional in reverse and should be used in this situation.*

Note: *Avoid turning on steep slopes or hills. You could lose traction, slip sideways or a possible vehicle roll over.*

Driving Over Rocks and Gravel

Never attempt to straddle a rock that is large enough to strike your axles or undercarriage. Leave a generous gap between your vehicle and other vehicles to minimize the risk of damage. Avoid dust clouds as they reduce visibility.

DRIVING YOUR VEHICLE AT HIGH SPEEDS - RAPTOR

If you plan on using your vehicle for severe, high speed off-road use, we recommend the following:

- Equipping your vehicle with the safety equipment appropriate for off-road recovery.
- Using personal safety equipment, including a certified helmet and approved neck restraint device.
- Doing a low speed observance run in unfamiliar areas to become aware of any obstacles that you could encounter.

The vehicle warranty does not cover damage caused by driving your vehicle beyond its capabilities, or in extreme off-road conditions. Damage can include but is not limited to the following: skid plates, shock guards, running boards and exterior finishes, as well as a bent, cracked or broken body, frame and chassis components.

Note: *Driving your vehicle off-road at high speeds will require an alternative maintenance schedule.*

DRIVING THROUGH WATER LIMITATIONS

WARNING: Do not attempt to cross a deep, fast flowing body of water. Failure to follow this instruction could result in the loss of control of your vehicle, personal injury or death.

Determine the depth and speed of the current before attempting a water crossing. As the water depth increases, reduce your vehicle speed to avoid potential vehicle damage.

The key to a safe crossing is the water depth, current and bottom of the water's condition. On soft bottoms, the vehicle sinks in, effectively increasing the water level on the vehicle. Make sure to consider this when determining the depth of water. Be aware that obstacles and debris may be beneath the water's surface.

Note: *Cross flowing water at an angle heading slightly upstream.*

Note: *Tread lightly and avoid damage to the environment.*

Ranger (TRA, TRB) Vehicles Built From: 01-11-2024, CG4010en enGBR, Edition date: 202407, DOM

Drive slowly when crossing water. Start very slowly when entering, then build momentum. Proceed with a constant slow speed lightly pressing on the accelerator. Ease off the accelerator as you reach the other side to diminish the front wave. Apply the accelerator slowly and as necessary to climb out of the other side

Note: *Do not try to accelerate through the water crossing.*

When driving too fast in water or through deep water, the engine, transmission, transfer case, axles, electrical components or vehicle interior could ingest water. Muddy waters can reduce the cooling system effectiveness by depositing debris into the radiator. The vehicle warranty does not cover water damage.

Note: *When you are driving through water do not exceed 7 km/h (4.3 mph)*

Never stop or shut a vehicle off when crossing deep water unless your vehicle ingested water into the engine air intake. If the engine stalls, do not attempt to restart it. Keep the doors fully closed during a water crossing. Take extra care crossing any type of water. Do not drive into water unless necessary. Only drive through areas that are designated and approved. Determine exit points that are downstream of your entry point to allow for drifting. If there are other vehicles ahead, wait until they have left the water. Unsettled water can make a safe passage more challenging.

High currents even in shallow water can wash the dirt out from around your tires or push your vehicle across slippery rocks or surfaces. Never attempt to cross flowing water that is deeper than your vehicle's ground clearance. Even in low currents your vehicle's body surface area can be pushed downstream and out of control. Do not cross any body of water that is fast flowing and rising, wait for the flow rate to reduce.

Vehicles used to cross water regularly should be periodically inspected for signs of water ingestion in all of the vehicle's fluids. If water is found inside your vehicle fluids, service your vehicle or see an authorized dealer.

After driving through water and as soon as it is safe to do so, check the brakes, horn, lights, and steering wheel to make sure everything is still in working order.

WATER WADING - EXCLUDING: RAPTOR

WARNING: Do not attempt to cross a deep, fast flowing body of water. Failure to follow this instruction could result in the loss of control of your vehicle, personal injury or death.

As the water depth increases, you must reduce your vehicle speed to avoid potential vehicle damage.

- Always determine the depth before attempting a water crossing. Never drive through water that is higher than the bottom of the wheel hubs.
- Slowly proceed and avoid splashing water any more than is necessary.
- Be aware that obstacles and debris may be beneath the water's surface.
- Keep the doors fully closed during the water crossing.
- After driving through water and as soon as it is safe to do so, check the brakes, horn, lights, and steering wheel to confirm those systems are properly functioning.

Note: *Engine damage can occur if water enters the air filter.*

WATER WADING - RAPTOR

WARNING: Do not attempt to cross a deep, fast flowing body of water. Failure to follow this instruction could result in the loss of control of your vehicle, personal injury or death.

As the water depth increases, you must reduce your vehicle speed to avoid potential vehicle damage.

- Always determine the depth before attempting a water crossing.
- Slowly proceed and avoid splashing water any more than is necessary.
- Be aware that obstacles and debris may be beneath the water's surface.
- Keep the doors fully closed during the water crossing.
- After driving through water and as soon as it is safe to do so, check the brakes, horn, lights, and steering wheel to confirm those systems are properly functioning.

Note: *Engine damage can occur if water enters the air filter.*

OFF-ROAD DRIVING AIDS - RAPTOR

Selecting an Off-Road Drive Mode

Using the appropriate drive mode increases your vehicle's control. See **Drive Mode Control** (page 343).

Using Four-Wheel Drive

Your vehicle has a four-wheel drive system that offers various modes to help you optimize traction on any off-road surface. See **Four-Wheel Drive** (page 258).

Using the Cameras Off-Road

Use the 360 degree camera to enhance your off-road experience. See **360 Degree Camera** (page 315).

Using the Rear Differential Lock

When engaged, the rear differential lock provides additional traction to your vehicle by forcing the two rear wheels to turn at the same speed.

Ranger (TRA, TRB) Vehicles Built From: 01-11-2024, CG4010en enGBR, Edition date: 202407, DOM

Note: *Rear differential lock is only available when the vehicle is in four-wheel drive high (4H) or four-wheel drive low (4L). See* ***Electronic Locking Differential*** *(page 267).*

Using Trail Control

Trail control allows you to maneuver the vehicle without using the throttle and brake pedals.

The system controls acceleration and braking in difficult off-road environments, which allows you to focus on steering. See **Trail Control** (page 297).

Trail control performance:

- Manages wheel slip to maximize traction.
- Provides braking to maximize traction in descents.

Using Trail One Pedal Drive

Trail one pedal drive allows you to accelerate and brake using only the accelerator pedal.

Use this when driving over large obstacles, such as rocks or logs, to help maintain a constant vehicle speed.

In four-wheel drive high (4H), the system offers lift pedal braking and auto hill hold functionality.

Note: *Trail one pedal drive is only available when the vehicle is in four-wheel drive high (4H) or four-wheel drive low (4L).*

AFTER DRIVING YOUR VEHICLE OFF-ROAD

WARNING: After off-road use, before returning to the road, check the wheels and tires for damage. Off-road use may cause damage to your wheels and tires that can lead to tire failure, loss of vehicle control, serious injury or death.

WARNING: Always re-inflate tires to recommended tire pressures before the vehicle is operated on-road. The recommended pressure is located on the tire label or safety certification label, located on the B-pillar, inside the driver's door.

After driving off-road check for damage to your vehicle and, if necessary, have your vehicle fixed as soon as possible. Inspect the underbody of your vehicle by checking tires, body structure, steering, suspension, and exhaust system for damage.

Check the radiator for mud and debris and clean as needed.

Remove accumulations of plants or brush. These things could be a fire hazard or hide damage to the fuel lines, brake hoses, and propeller shafts.

With the vehicle off, use a low pressure hose to wash away mud and fine debris. You may need to reach past the active grille shutters to remove larger debris.

If you experience unusual vibration after driving in mud, slush or similar conditions, check the wheels for impacted material. Impacted material can cause vibrations while driving and wheel imbalance. Remove the material to resolve the problem.

Ranger (TRA, TRB) Vehicles Built From: 01-11-2024, CG4010en enGBR, Edition date: 202407, DOM

OFF-ROAD SCREEN

WHAT IS THE OFF-ROAD SCREEN

The off-road screen displays information related to the vehicle's position and performance. It is designed to help you get the most out of your vehicle's off-road driving capabilities.

HOW DOES THE OFF-ROAD SCREEN WORK

The off-road screen assists you by:

- Using the cameras to display what is directly in front of and behind your vehicle to help you avoid obstacles.
- Displaying information related to tire pressure if the vehicle is equipped with the tire pressure monitoring system.
- Displaying information related to drivetrain status.
- Allowing you to enable or disable a variety of on-demand features.

SWITCHING THE OFF-ROAD SCREEN ON AND OFF

Press and release the off-road switch to enable. Press and release again to disable.

The off-road screen can also be enabled and disabled through the touchscreen:

1. From the settings menu, press Controls. See **Center Display** (page 599).
2. Press Off-Road.

USING THE OFF-ROAD SCREEN - VEHICLES WITH: 360 DEGREE CAMERA, EXCLUDING: RAPTOR

The buttons on the side of the off-road screen allow you to turn the different features on and off.

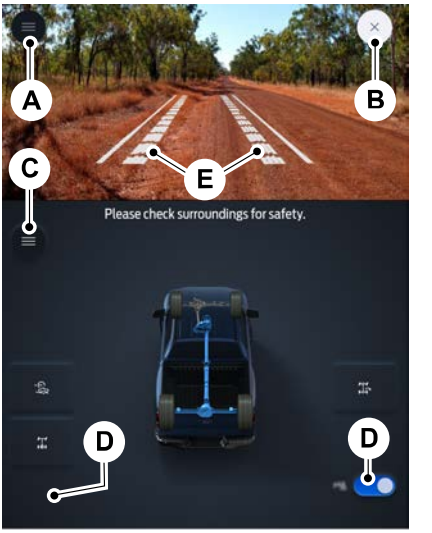

A	Off-road camera views.
B	Exit off-road status screen.
C	Information menu.
D	Off-road feature buttons.
E	Active guidelines.

Off-Road Feature Buttons

These buttons activate various off-road features. The features available depend on your vehicle's equipment.

Hill descent control. See **Hill Descent Control** (page 302).

Trail control. See **Trail Control** (page 297).

Rear differential lock. See **Electronic Locking Differential** (page 267).

Trail turn assist. See **Trail Turn Assist** (page 300).

Parking aids. See **Parking Aids** (page 307).

Parking aids. See **Parking Aids** (page 307).

Off-Road Information On-Demand

Off-road status.

Pitch and roll.

Parking aid indicators. See **Parking Aid Indicators** (page 310).

Off-Road Camera

The off-road camera provides a video image of the area in the front or rear of your vehicle. For available camera views, See **Switching the 360 Degree Camera View** (page 318).

Note: *The camera feed may not automatically launch with the off-road screen. If this occurs, use the camera button to re-launch the camera feed. See **Switching the 360 Degree Camera On and Off** (page 317).*

USING THE OFF-ROAD SCREEN - VEHICLES WITH: ANALOG REAR VIEW CAMERA/DIGITAL REAR VIEW CAMERA, EXCLUDING: RAPTOR

The buttons on the side of the off-road screen allow you to turn the different features on and off.

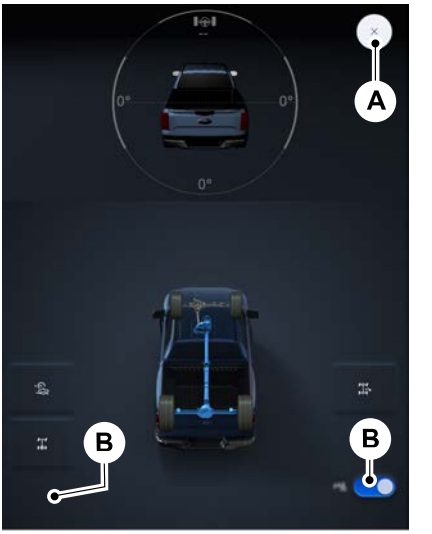

A Exit off-road status screen.
B Off-road feature buttons.

Off-Road Feature Buttons

These buttons activate various off-road features. The features available depend on your vehicle's equipment.

Hill descent control. See **Hill Descent Control** (page 302).

Trail control. See **Trail Control** (page 297).

Rear differential lock. See **Electronic Locking Differential** (page 267).

Trail turn assist. See **Trail Turn Assist** (page 300).

Parking aids. See **Parking Aids** (page 307).

Parking aids. See **Parking Aids** (page 307).

USING THE OFF-ROAD SCREEN - RAPTOR, VEHICLES WITH: 360 DEGREE CAMERA

The buttons on the side of the off-road screen allow you to turn the different features on and off.

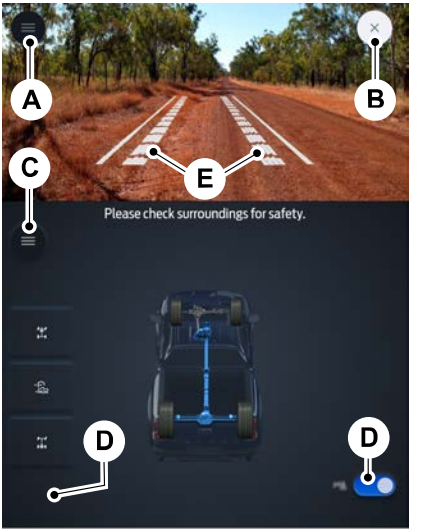

A Off-road camera views.
B Exit off-road screen.
C Information menu.
D Off-road feature buttons.
E Active guidelines.

Off-Road Feature Buttons

These buttons activate various off-road features. The features available depend on your vehicle's equipment.

Trail control. See **Trail Control** (page 297).

Front differential lock. See **Electronic Locking Differential** (page 267).

Rear differential lock. See **Electronic Locking Differential** (page 267).

Parking aids. See **Parking Aids** (page 307).

Parking aids. See **Parking Aids** (page 307).

Off-Road Information On-Demand

Off-road status.

Pitch and roll.

Parking aid indicators. See **Parking Aid Indicators** (page 310).

Off-Road Camera

The off-road camera provides a video image of the area in the front or rear of your vehicle. For available camera views, See **Switching the 360 Degree Camera View** (page 318).

Note: *The camera feed may not automatically launch with the off-road screen. If this occurs, use the camera button to re-launch the camera feed. See **Switching the 360 Degree Camera On and Off** (page 317).*

Ranger (TRA, TRB) Vehicles Built From: 01-11-2024, CG4010en enGBR, Edition date: 202407, DOM

BREAKING-IN

You need to break in new tires for approximately 480 km (300 mi). During this time, your vehicle may exhibit some unusual driving characteristics.

Avoid driving too fast during the first 1,600 km (1,000 mi). Vary your speed frequently and change up through the gears early. Do not labor the engine.

Do not tow during the first 1,600 km (1,000 mi).

DRIVING ECONOMICALLY

The following helps to improve fuel consumption:

- Drive smoothly, accelerate gently and anticipate the road ahead to avoid heavy braking.
- Regularly check your tire pressures and make sure that they are inflated to the correct pressure.
- Follow the recommended maintenance schedule and carry out the recommended checks.
- Plan your journey and check the traffic before you set off. It is more efficient to combine errands into a single trip whenever possible.
- Avoid idling the engine in cold weather or for extended periods. Start the engine only when you are ready to set off.
- Do not carry unnecessary weight in your vehicle as extra weight wastes fuel.
- Do not add unnecessary accessories to the exterior of your vehicle, for example running boards. If you use a roof rack, remember to fold it down or remove it when not in use.
- Do not shift into neutral when you are braking or when your vehicle is slowing down.
- Shut all windows when driving at high speeds.
- Switch off all electric systems when not in use, for example air conditioning. Make sure that you unplug any accessories from the auxiliary power points when not in use.

DRIVING IN COLD WEATHER

The functional operation of some components and systems can be affected at temperatures below approximately -25ºC (-13ºF).

Driving on Snow and Ice

WARNING: If you are driving in slippery conditions that require tire chains or cables, then it is critical that you drive cautiously. Keep speeds down, allow for longer stopping distances and avoid aggressive steering to reduce the chances of a loss of vehicle control which can lead to serious injury or death. If the rear end of your vehicle slides while cornering, steer in the direction of the slide until you regain control of your vehicle.

On ice and snow, you should drive more slowly than usual. Your vehicle has a four wheel anti-lock brake system, do not pump the brake pedal. See **Anti-Lock Braking System Limitations** (page 274).

In snow and ice, all-wheel drive vehicles have advantages over two-wheel drive vehicles but can still skid. When driving on snowy or icy roads, should you start to slide, turn the steering wheel in the direction of the slide until you regain control.

Ranger (TRA, TRB) Vehicles Built From: 01-11-2024, CG4010en enGBR, Edition date: 202407, DOM

On snow and ice, avoid suddenly applying power and avoid quick change of direction. Apply the accelerator slowly and steadily when starting from a stop.

Avoid sudden braking. An all-wheel drive vehicle may accelerate better than a two-wheel drive vehicle in snow and ice. However, an all-wheel drive vehicle will not stop any faster, as braking occurs at all four wheels. Do not become overconfident to road conditions.

FLOOR MATS

WARNING: Use a floor mat designed to fit the footwell of your vehicle that does not obstruct the pedal area. Failure to follow this instruction could result in the loss of control of your vehicle, personal injury or death.

WARNING: Pedals that cannot move freely can cause loss of vehicle control and increase the risk of serious personal injury.

WARNING: Secure the floor mat to both retention devices so that it cannot slip out of position and interfere with the pedals. Failure to follow this instruction could result in the loss of control of your vehicle, personal injury or death.

WARNING: Do not place additional floor mats or any other covering on top of the original floor mats. This could result in the floor mat interfering with the operation of the pedals. Failure to follow this instruction could result in the loss of control of your vehicle, personal injury or death.

WARNING: Always make sure that objects cannot fall into the driver foot well while your vehicle is moving. Objects that are loose can become trapped under the pedals causing a loss of vehicle control.

To install floor mats that have eyelets, position the floor mat eyelet over the retention post and press down to lock in position. Repeat for all eyelets on the floor mat.

To remove the floor mats, reverse the installation procedure.

Note: *Regularly check the floor mats to make sure they are secure.*

Ranger (TRA, TRB) Vehicles Built From: 01-11-2024, CG4010en enGBR, Edition date: 202407, DOM

HIGH VOLTAGE BATTERY VEHICLE PRECAUTIONS - PLUG-IN HYBRID ELECTRIC VEHICLE (PHEV)

In the event of damage or fire involving an electric vehicle or hybrid-electric vehicle:

- Assume the high-voltage battery and associated components are energized and fully charged.
- Exposed electrical components, wires and high-voltage batteries present potential high-voltage shock hazards.
- Venting high-voltage battery vapors are potentially toxic and flammable.
- Physical damage to the vehicle or high-voltage battery could result in immediate or delayed release of toxic, flammable gases and fire.

Vehicle information and general safety practices include reviewing the owner's manual and becoming familiar with your vehicle's safety information and recommended safety practices.

Crashes

A crash or impact significant enough to require an emergency response for conventional vehicles would also require the same response for an electric or hybrid-electric vehicle.

If Possible:

1. Move your vehicle to a safe, nearby location and remain on the scene.
2. Roll down the windows before you switch your vehicle off.
3. Place your vehicle in park (P), set the parking brake, switch off the vehicle, activate the hazard flashers and move your key(s) at least 5 m (16 ft) away from the vehicle.

Always:

- Call emergency assistance if needed and advise that an electric or hybrid-electric vehicle is involved.
- Avoid contact with leaking fluids and gases, and remain out of the way of oncoming traffic until emergency responders arrive.
- When emergency responders arrive, tell them that the vehicle involved is an electric vehicle or hybrid-electric vehicle.

Fires

As with any vehicle, call emergency assistance immediately if you see sparks, smoke or flames coming from the vehicle. Remain a safe distance from the vehicle and try to stay clear of the smoke.

1. Exit the vehicle immediately.
2. Advise emergency assistance that an electric or hybrid-electric vehicle is involved.
3. As with any vehicle fire, do not inhale smoke, vapors or gas from the vehicle, as they may be hazardous.

Post-Incident

1. Do not store a severely damaged vehicle with a lithium-ion battery inside a structure or within 15 m (49 ft) of any structure or vehicle.
2. Make sure that passenger and luggage compartments remain ventilated.
3. Call emergency assistance if you observe leaking fluids, sparks, smoke or flames, or hear gurgling or bubbling from the high-voltage battery.

Ranger (TRA, TRB) Vehicles Built From: 01-11-2024, CG4010en enGBR, Edition date: 202407, DOM

SWITCHING THE HAZARD FLASHERS ON AND OFF

The hazard flasher button is on the instrument panel. Press the button to switch the hazard flashers on if your vehicle is creating a safety hazard for other road users.

When you switch the hazard flashers on, all front and rear direction indicators flash.

Note: *The hazard flashers operate when the ignition is in any position, or if the key is not in the ignition. The battery loses charge and could have insufficient power to restart your vehicle.*

Press the button again to switch them off.

JUMP STARTING THE VEHICLE

JUMP STARTING PRECAUTIONS

WARNING: Batteries normally produce explosive gases which can cause personal injury. Therefore, do not allow flames, sparks or lighted substances to come near the battery. When working near the battery, always shield your face and protect your eyes. Always provide correct ventilation.

WARNING: Keep batteries out of reach of children. Batteries contain sulfuric acid. Avoid contact with skin, eyes or clothing. Shield your eyes when working near the battery to protect against possible splashing of acid solution. In case of acid contact with skin or eyes, flush immediately with water for a minimum of 15 minutes and get prompt medical attention. If acid is swallowed, call a physician immediately.

WARNING: Use only adequately sized cables with insulated clamps.

WARNING: Make sure that the cables are clear of any moving parts and fuel delivery system parts.

WARNING: Connect batteries with only the same nominal voltage.

WARNING: Using the jump leads incorrectly or completing the jump start procedure incorrectly can cause the battery to explode, which can lead to severe injuries.

WARNING: All work on the vehicle battery and the electrical system can cause serious chemical burns, fire or electric shocks. Always read the warnings and safety information before carrying out any kind of work on the battery

WARNING: Never charge a 12-volt vehicle battery once it has been frozen. Discharged 12-volt vehicle batteries can even freeze at temperatures of approximately 0ºC (+32ºF).

WARNING: The battery should be replaced if it is or has ever been frozen.

WARNING: A highly explosive mixture of gases is given off when the vehicle battery is jump started. Always keep fire, sparks, naked flames and lit cigarettes away from the vehicle battery. Never use a mobile telephone when the jump leads are being connected or disconnected.

WARNING: Only charge the battery in a well-ventilated space as the battery emits a highly explosive mixture of gases when the vehicle is being jump started.

WARNING: Never confuse the negative and positive terminals or connect the jump leads incorrectly.

WARNING: Observe the jump lead manufacturer's instructions.

WARNING: If the engine is running while the hood is open, stay clear of moving engine components. Failure to follow this warning could result in serious personal injury or death.

Do not attempt to push-start an automatic transmission vehicle. This could cause transmission damage.

Do not disconnect the battery of the disabled vehicle. This could damage your vehicle's electrical system.

PREPARING THE VEHICLE

Use only a 12 volt supply to start your vehicle.

Park the booster vehicle close to the hood of the disabled vehicle, making sure the two vehicles do not touch.

JUMP STARTING THE VEHICLE

Connecting the Jumper Cables

WARNING: Do not connect the negative jumper cable to any other part of your vehicle. Use the ground point.

Note: *If you are using a jump pack or booster box, follow the manufacturer's instructions.*

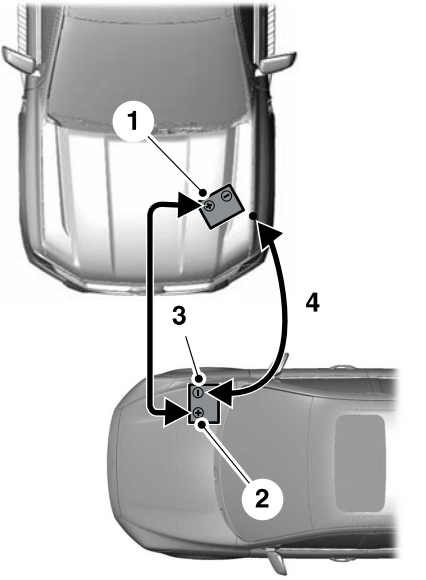

1. Unlatch the red cover to access the positive terminal. Connect the positive (+) jumper cable to the positive (+) terminal of the discharged battery.
2. Connect the other end of the positive (+) jumper cable to the positive (+) terminal of the booster vehicle battery.
3. Connect the negative (-) jumper cable to the negative (-) terminal of the booster vehicle battery.
4. Make the final connection of the negative (-) jumper cable to an exposed metal part of the disabled vehicle's engine, as shown in the following illustration, away from the battery and fuel injection system, or connect the negative (-) jumper cable to a ground connection point if available.

Note: *Do not use the hood latch as a negative (-) connection point. This could cause springs in the latch to burn and prevent the hood from operating correctly.*

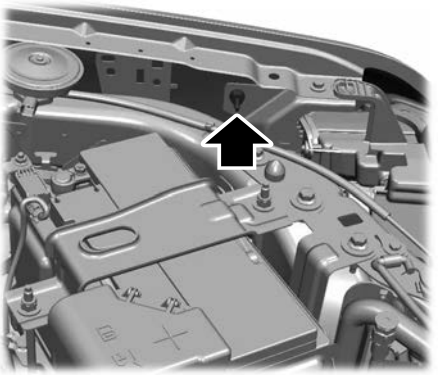

Starting the Engine

1. Start the engine of the booster vehicle and moderately rev the engine, or gently press the accelerator to keep the engine speed between 2000 RPM and 3000 RPM, as shown in your tachometer.
2. Start the engine of the disabled vehicle.
3. Once you start the disabled vehicle, run both vehicle engines for an additional three minutes before disconnecting the jumper cables.

Removing the Jumper Cables

Remove the jumper cables in the reverse order that they were connected.

Note: *Do not switch the headlamps on when disconnecting the cables. The peak voltage could blow the bulbs.*

POST-CRASH ALERT SYSTEM

WHAT IS THE POST-CRASH ALERT SYSTEM

The system helps draw attention to your vehicle in the event of a serious impact.

HOW DOES THE POST-CRASH ALERT SYSTEM WORK

The system is designed to turn the hazard flashers on, turn the courtesy lamps on, intermittently sound the horn and unlock all doors in the event of a serious impact that deploys an airbag or the seatbelt pretensioners.

POST-CRASH ALERT SYSTEM LIMITATIONS

Depending on applicable laws in the country your vehicle was built for, the horn does not sound in the event of a serious impact.

SWITCHING THE POST-CRASH ALERT SYSTEM OFF

Press the hazard flasher switch, the unlock button on the remote control, the panic button on the remote control or cycle the ignition to switch the system off.

Note: *The alert turns off when the vehicle battery runs out of charge.*

POST IMPACT BRAKING

HOW DOES POST IMPACT BRAKING WORK

In the event of a moderate to severe crash, the braking system reduces the vehicle's speed to prevent or reduce the impact of a potential secondary crash.

Ranger (TRA, TRB) Vehicles Built From: 01-11-2024, CG4010en enGBR, Edition date: 202407, DOM

POST IMPACT BRAKING LIMITATIONS

Post impact braking does not activate if any of the following occur:

- The anti-lock braking system is damaged during the collision.
- Electronic stability control is disabled.

OVERRIDING POST IMPACT BRAKING

You can override post impact braking by pressing the brake or accelerator pedal.

POST IMPACT BRAKING INDICATORS

It flashes when a post impact braking event is occurring.

AUTOMATIC CRASH SHUTOFF

WHAT IS AUTOMATIC CRASH SHUTOFF

The automatic crash shutoff is designed to stop the fuel going to the engine in the event of a moderate or severe crash.

Note: *Not every impact causes a shutoff.*

AUTOMATIC CRASH SHUTOFF PRECAUTIONS

WARNING: If your vehicle has been involved in a crash, have the fuel system checked. Failure to follow this instruction could result in fire, personal injury or death.

RE-ENABLING YOUR VEHICLE

1. Switch the ignition off.
2. Attempt to start your vehicle.
3. Switch the ignition off.
4. Attempt to start your vehicle.

Note: *If your vehicle does not start after the third attempt, have your vehicle checked as soon as possible.*

RECOVERY TOWING

ACCESSING THE FRONT TOWING POINT

WARNING: Using recovery hooks is dangerous and should only be done by a person familiar with proper vehicle recovery safety practices. Improper use of recovery hooks may cause hook failure or separation from the vehicle and could result in serious injury or death.

WARNING: Slowly remove the slack from the recovery strap prior to pulling. Failure to do so can introduce significantly higher loads which can cause the recovery hooks to break off, or the recovery strap to fail which can cause serious injury or death.

WARNING: Never link two straps together with a clevis pin. These heavy metal objects could become projectiles if the strap breaks and can cause serious injury or death.

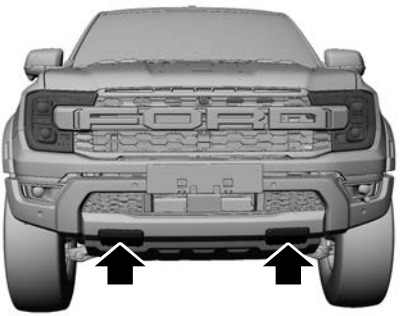

A. Front recovery hooks.

Use the provided under-seat tool to remove the recovery hook covers:

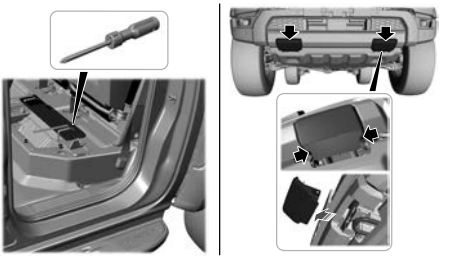

Note: *Your vehicle's front towing point configuration may be slightly different.*

Note: *Do not apply a load to the recovery hooks that is greater than the gross vehicle weight rating of your vehicle.*

Before using recovery hooks:

- Make sure all attaching points are secure and capable of withstanding the applied load.
- Do not use chains, cables or tow straps with metal hook ends.
- Only use recovery straps that have a minimum breaking strength two to three times the gross vehicle weight of the stuck vehicle.
- Make sure the recovery strap is in good condition and free of visible cuts, tears or damage.
- Use a damper device such as a tarp, heavy blanket or piece of carpet, and place it over the recovery strap to help absorb the energy in the event the strap breaks.
- Make sure the stuck vehicle is not loaded heavier than its gross vehicle weight rating specified on the certification label.
- Align the tow vehicle and stuck vehicle in a straight line, within 10 degrees.
- Keep bystanders to the sides of the vehicle, at a distance of at least twice the length of the recovery strap. This helps avoid injury from the hazard of a recovery hook or strap breaking, or a vehicle lurching into their path.

ACCESSING THE REAR TOWING POINT - RAPTOR

WARNING: Using recovery hooks is dangerous and should only be done by a person familiar with proper vehicle recovery safety practices. Improper use of recovery hooks may cause hook failure or separation from the vehicle and could result in serious injury or death.

WARNING: Slowly remove the slack from the recovery strap prior to pulling. Failure to do so can introduce significantly higher loads which can cause the recovery hooks to break off, or the recovery strap to fail which can cause serious injury or death.

WARNING: Never link two straps together with a clevis pin. These heavy metal objects could become projectiles if the strap breaks and can cause serious injury or death.

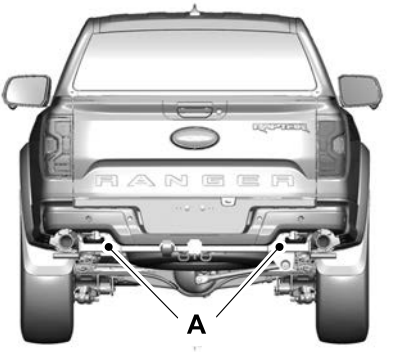

A. Rear recovery hooks.

Note: *Do not apply a load to the recovery hooks that is greater than the gross vehicle weight rating of your vehicle.*

Before using recovery hooks:

- Make sure all attaching points are secure and capable of withstanding the applied load.
- Do not use chains, cables or tow straps with metal hook ends.
- Only use recovery straps that have a minimum breaking strength two to three times the gross vehicle weight of the stuck vehicle.
- Make sure the recovery strap is in good condition and free of visible cuts, tears or damage.
- Use a damper device such as a tarp, heavy blanket or piece of carpet, and place it over the recovery strap to help absorb the energy in the event the strap breaks.
- Make sure the stuck vehicle is not loaded heavier than its gross vehicle weight rating specified on the certification label.
- Align the tow vehicle and stuck vehicle in a straight line, within 10 degrees.
- Keep bystanders to the sides of the vehicle, at a distance of at least twice the length of the recovery strap. This helps avoid injury from the hazard of a recovery hook or strap breaking, or a vehicle lurching into their path.

TRANSPORTING THE VEHICLE

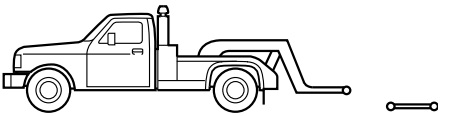

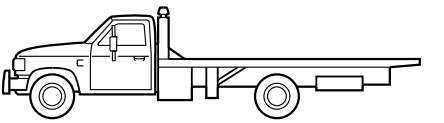

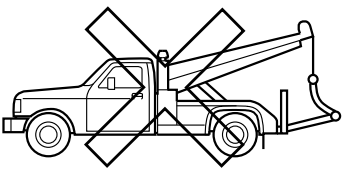

If you need to tow your vehicle, contact a professional towing service or your roadside assistance service provider.

Your manufacturer produces a towing manual for all authorized tow truck operators. Have your tow truck operator refer to this manual for proper hook-up and towing procedures.

We recommend the use of a wheel lift and dollies or flatbed equipment to tow your vehicle. Vehicle damage could occur if towed incorrectly, or by any other means.

Front-wheel and rear-wheel drive vehicles must have their designated drive wheels off the ground regardless of towing direction. Use tow dollies to prevent damage to the transmission.

All-wheel or four-wheel drive vehicles require that all wheels be off the ground using a wheel lift and dollies or flatbed equipment. This prevents damage to the transmission and drive system.

Note: *You need to switch on the ignition to unlock the steering.*

Note: *Make sure you check the steering column before towing. It could lock if the battery is dead.*

FAIL-SAFE COOLING

WHAT IS FAIL-SAFE COOLING

Fail-safe cooling allows you to temporarily drive your vehicle before any incremental component damage occurs due to overheating.

The fail-safe distance depends on outside temperature, vehicle load and terrain.

HOW DOES FAIL-SAFE COOLING WORK

If the engine reaches a preset over-temperature condition, the engine automatically switches to alternating cylinder operation. Each disabled cylinder acts as an air pump and cools the engine.

When this occurs, your vehicle still operates, however:

- Engine power is limited.
- The air conditioning system turns off.

Continued operation increases the engine temperature, causing the engine to completely shut down. Your steering and braking effort increases in this situation.

When the engine temperature cools, you can re-start the engine.

Note: *Have your vehicle checked as soon as possible to minimize engine damage.*

DRIVING WHEN FAIL-SAFE MODE IS ACTIVATED

WARNING: Fail-safe mode is for use during emergencies only. Operate your vehicle in fail-safe mode only as long as necessary to bring your vehicle to rest in a safe location and seek immediate repairs. When in fail-safe mode, your vehicle will have limited power, will not be able to maintain high-speed operation, and may completely shut down without warning, potentially losing engine power, power steering assist, and power brake assist, which may increase the possibility of a crash resulting in serious injury.

Ranger (TRA, TRB) Vehicles Built From: 01-11-2024, CG4010en enGBR, Edition date: 202407, DOM

WARNING: Do not remove the coolant reservoir cap when the engine is on or the cooling system is hot. Wait 10 minutes for the cooling system to cool down. Cover the coolant reservoir cap with a thick cloth to prevent the possibility of scalding and slowly remove the cap. Failure to follow this instruction could result in personal injury.

Continued operation increases the engine temperature, causing the engine to completely shut down. Your steering and braking effort increases in this situation.

When the engine temperature cools, you can re-start the engine. Have your vehicle checked as soon as possible to minimize engine damage.

Your vehicle has limited engine power when in the fail-safe mode, drive your vehicle with caution. Your vehicle does not maintain high-speed operation and the engine may operate poorly.

Remember that the engine is capable of automatically shutting down to prevent engine damage. In this situation:

1. Pull off the road as soon as safely possible and switch the engine off.
2. If you are a member of a roadside assistance program, we recommend that you contact your roadside assistance service provider.
3. If this is not possible, wait for a short period of time for the engine to cool.
4. Check the coolant level. If the coolant level is at or below the minimum mark, add prediluted coolant immediately.
5. When the engine temperature cools, you can re-start the engine. Have your vehicle checked as soon as possible to minimize engine damage.

Note: *Driving your vehicle without repair increases the chance of engine damage.*

FAIL-SAFE COOLING INDICATORS

If the engine begins to overheat, the coolant temperature gauge moves toward the red zone.

A warning lamp illuminates and a message may appear in the instrument cluster display.

TOWING YOUR VEHICLE PRECAUTIONS

Use the following guidelines when towing your vehicle. Failure to follow this instruction could result in vehicle damage not covered by the vehicle warranty.

Note: *Make sure you properly secure your vehicle to the tow vehicle.*

Note: *If you are unsure of the vehicle's configuration, contact an authorized dealer.*

EMERGENCY TOWING - AUTOMATIC TRANSMISSION

If your vehicle becomes inoperable without access to wheel dollies or a vehicle transport trailer, it can be flat-towed with all wheels on the ground, regardless of the powertrain and transmission configuration, under the following conditions:

- Your vehicle is facing forward for towing in a forward direction.
- Use the manual park release procedure. Failure to do so may result in damage to the transmission.
- Maximum speed is 56 km/h (35 mph).
- Maximum distance is 80 km (50 mi).

EMERGENCY TOWING - MANUAL TRANSMISSION

WARNING: When towing your vehicle you must select neutral (N).

If your vehicle becomes inoperable without access to wheel dollies or a vehicle transport trailer, it can be flat-towed with all wheels on the ground, regardless of the powertrain and transmission configuration, under the following conditions:

- Your vehicle is facing forward for towing in a forward direction.
- Maximum speed is 56 km/h (35 mph).
- Maximum distance is 80 km (50 mi).

Ranger (TRA, TRB) Vehicles Built From: 01-11-2024, CG4010en enGBR, Edition date: 202407, DOM

STORING A FIRST AID KIT

Single Cab

You can store a first aid kit in the glove box.

Double Cab

You can store a first aid kit under the rear seat.

STORING A FIRE EXTINGUISHER

1KG Fire Extinguisher

You can store the fire extinguisher under the front passenger seat.

2KG Fire Extinguisher

You can store the fire extinguisher under the second row seat.

STORING A WARNING TRIANGLE

Single Cab

You can store a warning triangle behind the front seats.

Double Cab

You can store a warning triangle under the passenger seat.

Ranger (TRA, TRB) Vehicles Built From: 01-11-2024, CG4010en enGBR, Edition date: 202407, DOM

FUSE PRECAUTIONS

WARNING: Always disconnect the battery before servicing high current fuses.

WARNING: To reduce risk of electrical shock, always replace the cover to the power distribution box before reconnecting the battery or refilling fluid reservoirs.

WARNING: Always replace a fuse with one that has the specified amperage rating. Using a fuse with a higher amperage rating can cause severe wire damage and could start a fire.

UNDER HOOD FUSE BOX

LOCATING THE UNDER HOOD FUSE BOX

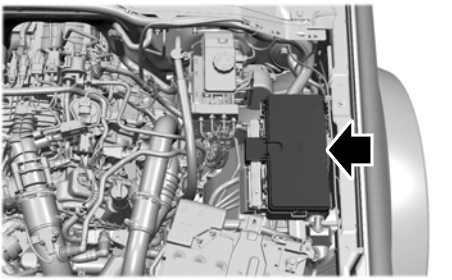

ACCESSING THE UNDER HOOD FUSE BOX

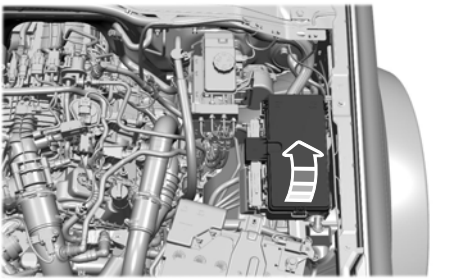

Ranger (TRA, TRB) Vehicles Built From: 01-11-2024, CG4010en enGBR, Edition date: 202407, DOM

IDENTIFYING THE FUSES IN THE UNDER HOOD FUSE BOX

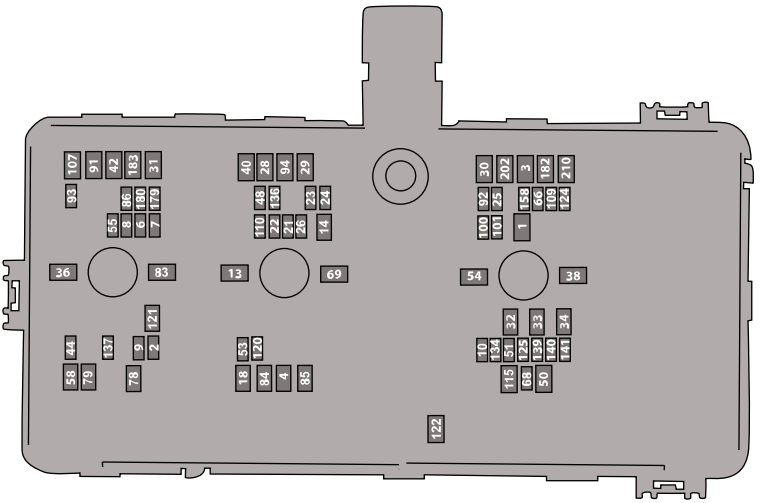

Item	Rating	Protected Component
1	30 A	Body control module 1.
2	20 A	Crankcase ventilation heater (2.0L, 3.0L diesel).
3	30 A	Body control module 2.
4	30 A	Fuel pump.
5	—	Not used.
6	25 A	Powertrain control module power.
7	30 A	Exhaust gas recirculation bypass valve (3.0L diesel). Variable camshaft timing (2.3L, 3.0L gas). Camshaft position sensor (3.0L gas).

Item	Rating	Protected Component
		Vacuum solenoid valve (2.0L). Exhaust sensors (2.3L gas). Canister purge valve (2.3L gas).
8	20 A	Heater positive crankcase ventilation valve (3.0L diesel). Variable oil pump (3.0L diesel). Coolant pump (3.0L gas). Turbocharger bypass valve (3.0L gas). Ignition coils (2.3L gas). Active grille shutter motor. Cooling fan relays. A/C clutch solenoid. Auxiliary water pump. Aspirate valve control. Auxiliary coolant pump motor (3.0L gas).
9	20 A	Ignition coils (3.0L gas) Glow plug control module (diesel). Particulate matter sensor (diesel). Nitrous oxide sensor (diesel). Oil pump solenoid (2.3L gas). Turbocharger surge valve (2.3L gas). Engine coolant bypass valve (2.3L gas). 4x4 relay coil.
10	20 A	Fuel volume control valve (3.0L diesel). Transmission control module.
11	—	Not used.
12	—	Not used.

Item	Rating	Protected Component
13	40 A	Front blower motor.
14	20 A	Automatic transmission fluid pump (diesel).
15	—	Not used.
16	—	Not used.
17	—	Not used.
18	30 A	Starter motor.
19	—	Not used.
20	—	Not used.
21	10 A	Automatic headlamp leveling.
22	10 A	Not used (spare).
23	10 A	Anti-lock brake system module.
24	10 A	Powertrain control module. Glow plug control module (2.0L , 3.0L diesel) Electronic power assist steering.
25	20 A	Driveline control module. Rear camera.
26	15 A	Transmission control module. Transmission oil pump. Automatic transmission fluid pump (diesel).
27	—	Not used.
28	60 A	Anti-lock brake system valves.
29	60 A	Anti-lock brake system pump.
30	40 A	Left-hand power seat.
31	40 A	Right-hand power seat.

Item	Rating	Protected Component
32	20 A	Power point - first row.
33	20 A	Power point - rear console.
34	20 A	Rear cargo power outlet - bedliner power point.
35	—	Not used.
36	60 A	Inverter.
37	—	Not used.
38	40 A	Heated seats control module.
39	15 A	Vehicle dynamics module (3.0L gas).
40	30 A	Not used (spare).
41	—	Not used.
42	30 A	Trailer tow brake module.
43	—	Not used.
44	10 A	Brake switch.
45	—	Not used.
46	—	Not used.
47	—	Not used.
48	30 A	Rear heated seat module - right.
49	—	Not used.
50	40 A	Heated backlite.
51	15 A	Not used (spare).
52	—	Not used.
53	15 A	Rear electronic differential lock.
54	40 A	Driveline control module.
55	30 A	Trailer tow park lamp.

Item	Rating	Protected Component
56	—	Not used.
57	—	Not used.
58	15 A	Trailer tow backup lamp.
59	—	Not used.
60	—	Not used.
61	—	Not used.
62	—	Not used.
63	—	Not used.
64	—	Not used.
65	—	Not used.
66	10 A	Not used (spare).
67	—	Not used.
68	20 A	Steering column lock.
69	30 A	Wiper motor.
70	—	Not used.
71	—	Not used.
72	—	Not used.
73	—	Not used.
74	—	Not used.
75	—	Not used.
76	—	Not used.
77	—	Not used.
78	50 A	Front windscreen defrost left-hand.
79	50 A	Front windscreen defrost right-hand.
80	—	Not used.
81	—	Not used.

Item	Rating	Protected Component
82	—	Not used.
83	50 A	Positive temperature coefficient heater 1 (3.0L diesel).
84	50 A	Positive temperature coefficient heater 2 (3.0L diesel).
85	50 A	Positive temperature coefficient heater 3 (3.0L diesel).
86	15 A	Selective catalytic reduction system heater 2 (2.0L, 3.0L diesel).
87	—	Not used.
88	—	Not used.
89	—	Not used.
90	—	Not used.
91	40 A	Trailer tow module.
92	10 A	Accessory.
93	5 A	Not used (spare).
94	20 A	Not used (spare).
95	—	Not used.
96	—	Not used.
97	—	Not used.
98	—	Not used.
99	—	Not used.
100	20 A	Left-hand headlamps.
101	20 A	Right-hand headlamps.
102	—	Not used.
103	—	Not used.
104	—	Not used.
105	—	Not used.

Item	Rating	Protected Component
106	—	Not used.
107	30 A	Trailer tow module - battery charger.
108	—	Not used.
109	20 A	Amplifier.
110	30 A	Trailer tow auxiliary.
111	—	Not used.
112	—	Not used.
113	—	Not used.
114	—	Not used.
115	30 A	Power roller shutter.
116	—	Not used.
117	—	Not used.
118	—	Not used.
119	—	Not used.
120	10 A	Water in fuel heater relay coils (diesel).
121	40 A	Water in fuel heater (diesel).
122	30 A	Transfer case control module.
123	—	Not used.
124	5 A	Rain sensor.
125	10 A	Not used (spare).
126	—	Not used.
127	—	Not used.
128	—	Not used.
129	—	Not used.
130	—	Not used.

Item	Rating	Protected Component
131	—	Not used.
132	—	Not used.
133	—	Not used.
134	25 A	Not used (spare).
135	—	Not used.
136	30 A	Rear heated seat module - left.
137	20 A	Advanced driver assistance system.
138	—	Not used.
139	5 A	Not used (spare).
140	5 A	USB smart charge port - rear console.
141	5 A	USB smart charge port - top.
142	—	Not used.
143	—	Not used.
145	—	Not used.
146	—	Not used.
147	—	Not used.
148	—	Not used.
149	—	Not used.
150	—	Not used.
151	—	Not used.
152	—	Not used.
153	—	Not used.
154	—	Not used.
155	—	Not used.
156	—	Not used.

Item	Rating	Protected Component
157	—	Not used.
158	10 A	Not used (spare).
159	—	Not used.
160	—	Not used.
161	—	Not used.
162	—	Not used.
163	—	Not used.
164	—	Not used.
165	—	Not used.
166	—	Not used.
167	—	Not used.
168	—	Not used.
169	—	Not used.
170	—	Not used.
171	—	Not used.
172	—	Not used.
173	—	Not used.
174	—	Not used.
175	—	Not used.
176	—	Not used.
177	—	Not used.
178	—	Not used.
179	15 A	Selective catalytic reduction system heater 1 (diesel).
180	10 A	Selective catalytic reduction system heater 3 (diesel).
181	—	Not used.
182	60 A	Drive door module.

Item	Rating	Protected Component
183	60 A	Passenger door module.
192	—	Not used.
202	60 A	Body control module B+.
210	30 A	Body control module start-stop.

BATTERY FUSE BOX

LOCATING THE BATTERY FUSE BOX

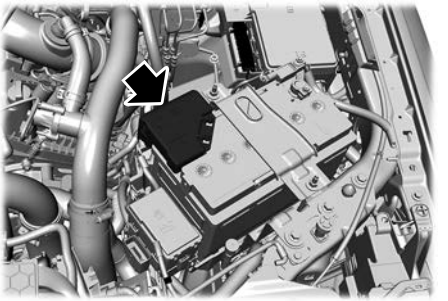

ACCESSING THE BATTERY FUSE BOX

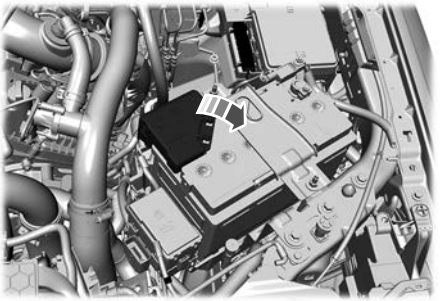

IDENTIFYING THE FUSES IN THE BATTERY FUSE BOX

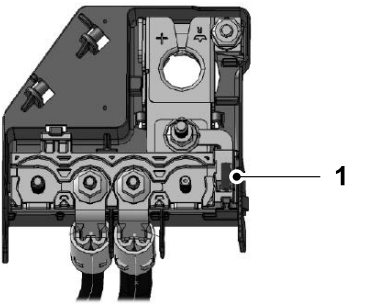

Item	Rating	Protected Component
1	3 A	Battery Monitoring System.

BODY CONTROL MODULE FUSE BOX

LOCATING THE BODY CONTROL MODULE FUSE BOX

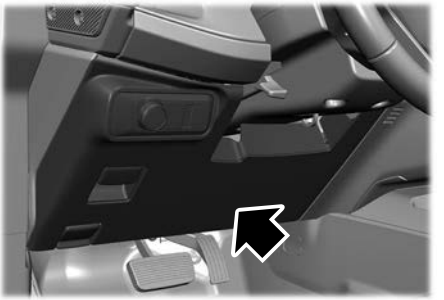

ACCESSING THE BODY CONTROL MODULE FUSE BOX

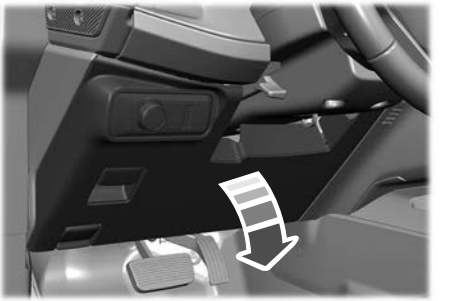

IDENTIFYING THE FUSES IN THE BODY CONTROL MODULE FUSE BOX

Item	Rating	Protected Component
1	—	Not used.
2	10 A	Inverter. Door lock switch. Power window switch.
3	7.5 A	Wireless accessory charging module.
4	—	Not used.
5	—	Not used.
6	10 A	Alarm horn. Battery backup sounder.
7	10 A	Not used (spare).
8	5 A	Telematics modem.
9	5 A	Combined sensor module.
10	—	Not used.
11	—	Not used.

Item	Rating	Protected Component
12	7.5 A	Climate control module. Gear shift module. Enhanced central gateway module.
13	7.5 A	Steering column control module. Instrument panel.
14	15 A	Not used.
15	15 A	On board diagnostic connector. SYNC.
16	—	Not used.
17	7.5 A	Trailer brake switch. Adaptive front lighting module.
18	7.5 A	Auxiliary switch. Tachograph.
19	5 A	Headlamp switch pack.
20	5 A	Ignition switch. Push button switch.
21	5 A	Not used (spare).
22	5 A	Not used (spare).
23	30 A	Not used (spare).
24	30 A	Not used (spare).
25	20 A	Not used (spare).
26	30 A	Not used (spare).
27	30 A	Not used (spare).
28	30 A	Not used (spare).
29	15 A	Display. Tachograph.
30	5 A	Brake switch.
31	10 A	Terrain management switch.

Item	Rating	Protected Component
		Integrated control module. Driver status monitor module. Radio frequency receiver module.
32	20 A	Audio control module.
33	—	Not used.
34	30 A	Run/start relay.
35	5 A	Not used (spare).
36	15 A	Parking aid module. Rear seat module.
37	20 A	Electrochomatic mirror. Heated steering wheel control module.
38	30 A	Power window switch.

IDENTIFYING FUSE TYPES

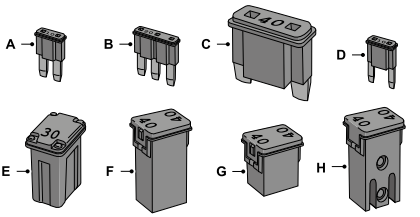

A Micro 2.
B Micro 3.
C Maxi.
D Mini.
E M Case.
F J Case.
G J Case Low Profile.
H Slotted M Case.

FUSES – TROUBLESHOOTING

FUSES – FREQUENTLY ASKED QUESTIONS

When do I need to check a fuse?

- If electrical components in the vehicle are not working.

When do I need to replace a fuse?

- If a fuse has blown.

How do I identify a blown fuse?

- You can identify a blown fuse by a broken wire within the fuse.

BRAKE SYSTEM INSPECTION

Disc brake pads should be checked to confirm that each disc brake pad lining has a suitable amount of friction material for safe use.

Inspection and Verification

Note: *Disc brake pads must be replaced as an axle set. Do not replace an individual disc brake pad or disc brake pads on one brake assembly only.*

1. Using a suitable tool, such as an inspection mirror, look into the inspection hole on the back of each disc brake caliper.
2. Inspect the inner and outer disc brake pads to confirm each disc brake pad lining measures 1.5 mm (0.1 in) thick or more.

Note: *See your authorized dealer if any disc brake pad lining is under 1.5 mm (0.1 in) thickness.*

Inspect each brake caliper and anchor bracket for corrosion, wear, or damage.

Wear Adjustment

Automatic adjustment of disc brake friction material during brake application occurs as follows:

- The piston slides within its bore to a new position, taking up the brake pad wear.
- The brake caliper moves on its guide pins, taking up the brake pad wear.

MAINTENANCE PRECAUTIONS

Have your vehicle serviced regularly to help maintain its roadworthiness and resale value. There is a large network of authorized dealers that are there to help you with their professional servicing expertise. We believe that their specially trained technicians are best qualified to service your vehicle properly and expertly. They are supported by a wide range of highly specialized tools developed specifically for servicing your vehicle.

If your vehicle requires professional service, an authorized dealer can provide the necessary parts and service. Check your warranty information to find out which parts and services are covered.

Use only recommended fluids and service parts conforming to specifications. See **Capacities and Specifications** (page 555).

WARNING: Switch the ignition off and apply the parking brake.

WARNING: Do not touch the electronic ignition system parts after you have switched the ignition on or when the engine is running. The system operates at high voltage. Failure to adhere to this warning could result in serious personal injury or death.

WARNING: Keep your hands and clothing clear of the engine cooling fan.

OPENING AND CLOSING THE HOOD

Opening the Hood

1. Pull the hood release lever.

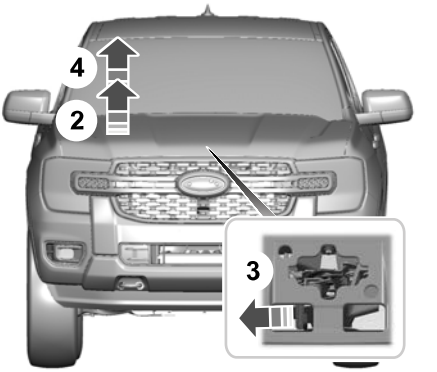

2. Slightly lift the hood.
3. Release the hood latch by pushing the secondary release lever to your left-hand side.

Ranger (TRA, TRB) Vehicles Built From: 01-11-2024, CG4010en enGBR, Edition date: 202407, DOM

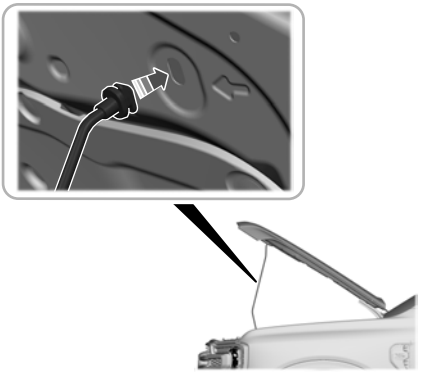

4. Open the hood and support it with the prop rod.

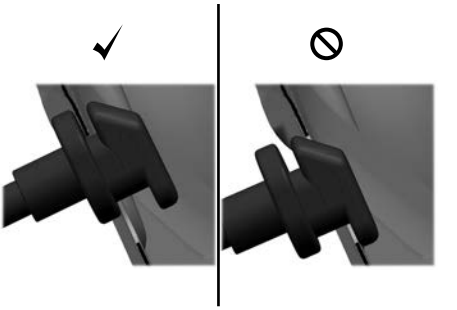

5. Make sure you fully engage the prop rod end cap with the hood.

Closing the Hood

WARNING: Make sure that you fully latch the hood before driving. Failure to follow this instruction could result in personal injury or death.

1. Fully stow the prop rod prior to lowering the hood.
2. To close, lower the hood and make sure that it fully latches.

Note: *Make sure the hood is closed completely.*

UNDER HOOD OVERVIEW - 2.0L DIESEL

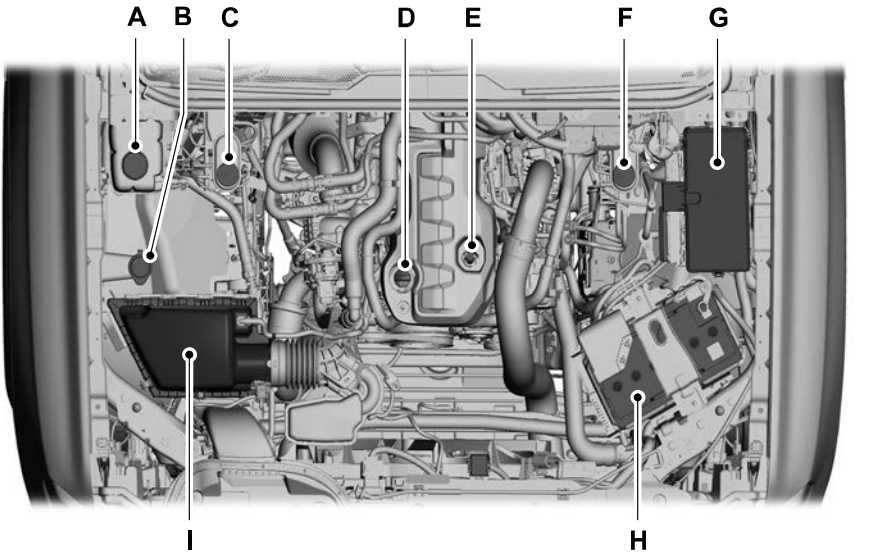

A Engine coolant reservoir. See **Checking the Coolant** (page 485).

B Windshield washer fluid. See **Washer Fluid Specification** (page 579).

C Brake fluid reservoir - Right-hand drive. See **Checking the Brake Fluid** (page 274).

D Engine oil filler cap. See **Adding Engine Oil** (page 484).

E Engine oil dipstick. See **Checking the Engine Oil Level** (page 483).

F Brake fluid reservoir - Left-hand drive. See **Checking the Brake Fluid** (page 274).

G Engine compartment fuse box. See **Identifying the Fuses in the Under Hood Fuse Box** (page 462).

H Battery. See **Changing the 12V Battery** (page 495).

I Air filter. See **Changing the Engine Air Filter** (page 490).

Ranger (TRA, TRB) Vehicles Built From: 01-11-2024, CG4010en enGBR, Edition date: 202407, DOM

UNDER HOOD OVERVIEW - 2.3L, HYBRID ELECTRIC VEHICLE (HEV)

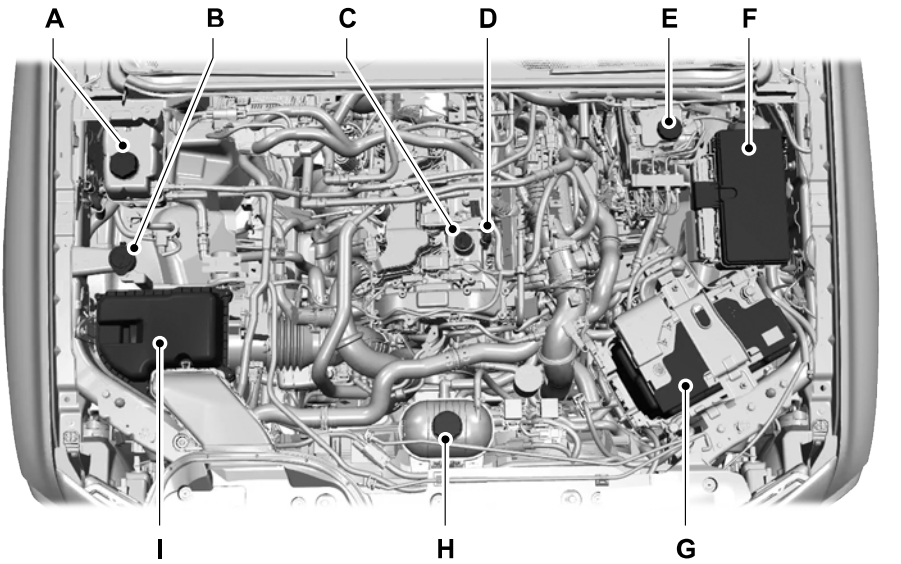

A Engine coolant reservoir. See **Checking the Coolant** (page 485).

B Washer fluid reservoir. See **Adding Washer Fluid** (page 98).

C Engine oil filler cap. See **Adding Engine Oil** (page 484).

D Engine oil dipstick. See **Checking the Engine Oil Level** (page 483).

E Brake fluid reservoir. See **Checking the Brake Fluid** (page 274).

F Engine compartment fuse box. See **Identifying the Fuses in the Under Hood Fuse Box** (page 462).

G Battery. See **Changing the 12V Battery** (page 495).

H Secondary coolant reservoir. See **Checking the Coolant** (page 485).

I Air filter assembly. See **Changing the Engine Air Filter** (page 490).

Ranger (TRA, TRB) Vehicles Built From: 01-11-2024, CG4010en enGBR, Edition date: 202407, DOM

UNDER HOOD OVERVIEW - 3.0L ECOBOOST™

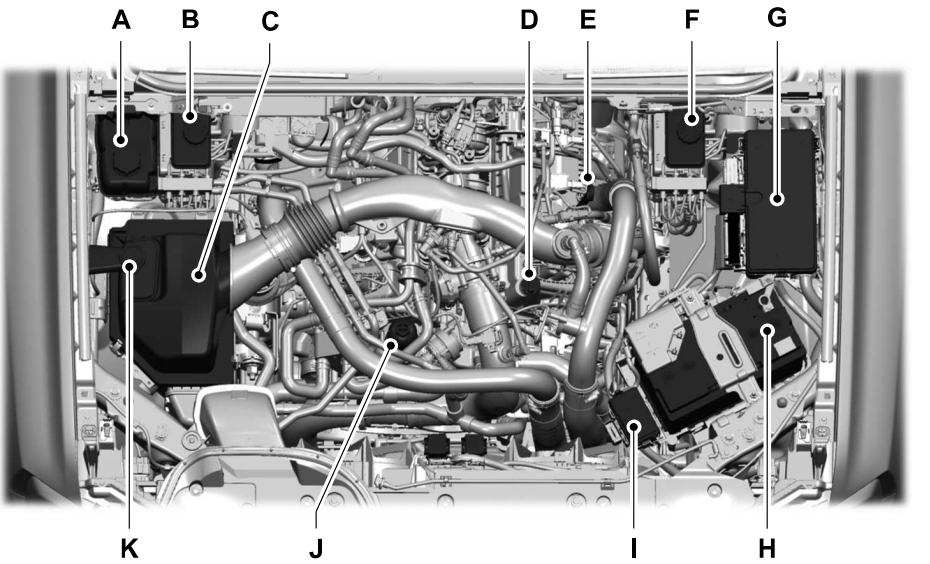

A Engine coolant reservoir. See **Checking the Coolant** (page 485).

B Brake fluid reservoir - Right-hand drive. See **Checking the Brake Fluid** (page 274).

C Air filter. See **Changing the Engine Air Filter** (page 490).

D Engine oil filler cap. See **Adding Engine Oil** (page 484).

E Engine oil dipstick. See **Checking the Engine Oil Level** (page 483).

F Brake fluid reservoir - Left-hand drive. See **Checking the Brake Fluid** (page 274).

G Engine compartment fuse box. See **Fuses** (page 461).

H Battery. See **Changing the 12V Battery** (page 495).

I Engine compartment accessory fuse box. See **Fuses** (page 461).

J Oil filter.

K Windshield washer fluid. See **Adding Washer Fluid** (page 98).

Ranger (TRA, TRB) Vehicles Built From: 01-11-2024, CG4010en enGBR, Edition date: 202407, DOM

UNDER HOOD OVERVIEW - 3.0L DIESEL

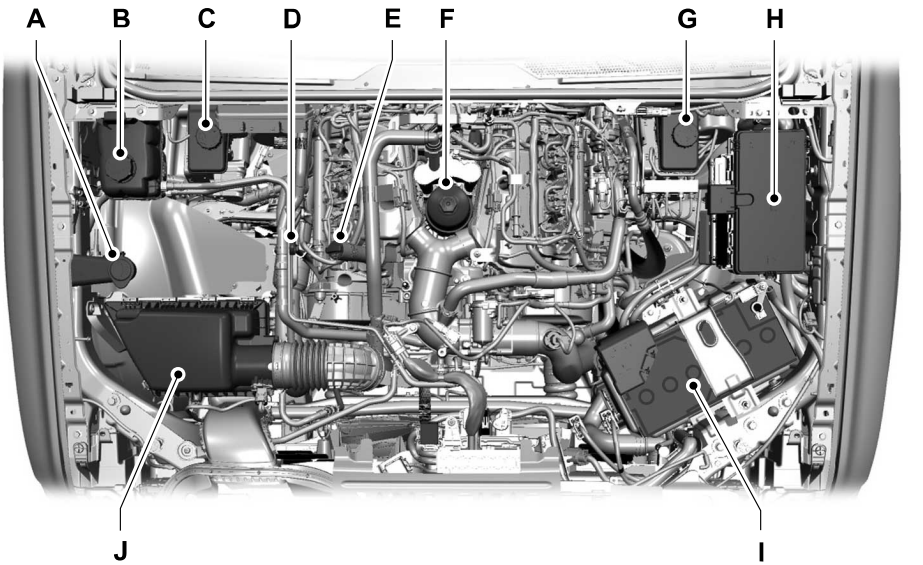

A Windshield washer fluid. See **Adding Washer Fluid** (page 98).

B Engine coolant reservoir. See **Checking the Coolant** (page 485).

C Brake fluid reservoir - Right-hand drive. See **Checking the Brake Fluid** (page 274).

D Engine oil dipstick. See **Checking the Engine Oil Level** (page 483).

E Engine oil filler cap. See **Adding Engine Oil** (page 484).

F Oil Filter.

G Brake fluid reservoir - Left-hand drive. See **Checking the Brake Fluid** (page 274).

H Engine compartment fuse box. See **Fuses** (page 461).

I Battery. See **Changing the 12V Battery** (page 495).

J Air filter. See **Engine Air Filter** (page 489).

ENGINE OIL

ENGINE OIL DIPSTICK OVERVIEW - 2.0L DIESEL

A Minimum.
B Maximum.

ENGINE OIL DIPSTICK OVERVIEW - 2.3L ECOBOOST™/3.0L ECOBOOST™

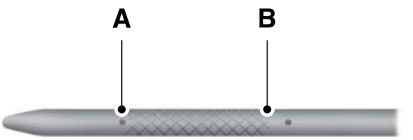

A Minimum.
B Maximum.

ENGINE OIL DIPSTICK OVERVIEW - 3.0L DIESEL

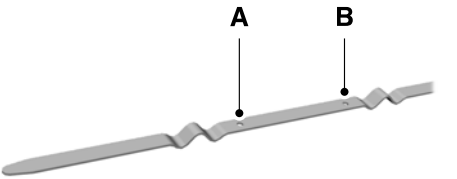

A Minimum.
B Maximum.

CHECKING THE ENGINE OIL LEVEL

1. Make sure that your vehicle is on level ground.
2. Check the oil level before starting the engine, or switch the engine off after warm up and wait 15 minutes for the oil to drain into the oil pan.

Note: *Checking the oil level too soon could result in an inaccurate reading.*

3. Remove the dipstick and wipe it with a clean, lint-free cloth.
4. Reinstall the dipstick and make sure it is fully seated.
5. Remove the dipstick again to check the oil level.

Note: *Read both sides of the dipstick and use the lowest oil level as the correct reading.*

Note: *If the oil level is between the maximum and minimum marks, the oil level is acceptable. Do not add oil.*

6. If the oil level is at the minimum mark, immediately add oil.

7. Reinstall the dipstick. Make sure it is fully seated.

Note: *The oil consumption of new engines reaches its normal level after approximately 5,000 km (3,000 mi).*

Note: *Increases in oil level can occur from frequent short trips that do not allow the engine to get to operating temperature, as well as frequent idling or low speed driving for long periods of time.*

Note: *If oil levels are continuously noted above the maximum mark, have your vehicle checked as soon as possible.*

ADDING ENGINE OIL

WARNING: Do not remove the filler cap when the engine is running.

WARNING: Do not add engine oil when the engine is hot. Failure to follow this instruction could result in personal injury.

Do not use supplemental engine oil additives because they are unnecessary and could lead to engine damage that the vehicle warranty may not cover.

1. Clean the area surrounding the engine oil filler cap before you remove it.
2. Remove the engine oil filler cap.
3. Add engine oil that meets our specifications. See **Capacities and Specifications** (page 555).
4. Reinstall the engine oil filler cap. Turn it clockwise until you feel a strong resistance.

Note: *Do not add oil further than the maximum mark. Oil levels above the maximum mark may cause engine damage.*

Note: *Immediately soak up any oil spillage with an absorbent cloth.*

INTELLIGENT OIL LIFE MONITOR

Under certain conditions the vehicle's intelligent oil life monitor may determine your oil requires replacement prior to your general service. Should this occur it is recommended you replace your oil within two weeks or 800 km (500 mi) of being alerted.

Your authorized dealer will be able to advise you whether only an engine oil and filter change is recommended or whether you should complete your general service inclusive of oil and oil Filter.

RESETTING THE INTELLIGENT OIL LIFE MONITOR - GASOLINE

Only reset the oil life monitoring system after changing the engine oil and oil filter.

1. Press the menu button on the steering wheel to enter the instrument cluster display main menu.
2. Select ***Vehicle Maintenance***.
3. Select ***Oil life***.
4. Press and hold the ***OK*** button until the system reset confirmation appears.

Ranger (TRA, TRB) Vehicles Built From: 01-11-2024, CG4010en enGBR, Edition date: 202407, DOM

ENGINE OIL – INFORMATION MESSAGES

Message	Action
Change engine oil soon	Displays when the engine oil life is becoming depleted. Have the engine oil changed as soon as possible.
Oil change required	Displays when the engine oil life is depleted. Have the engine oil changed as soon as possible.
Engine oil level low Add oil	Displays when the engine oil level is too low. Add engine oil as soon as possible. See **Adding Engine Oil** (page 484).

CHECKING THE COOLANT

When the engine is cold, check the concentration and level of the coolant at the intervals listed in the scheduled maintenance information.

Note: *Make sure that the coolant level is between the minimum and maximum marks on the coolant reservoir.*

Note: *Coolant expands when it is hot. The level may extend beyond the* ***MAX*** *mark.*

If the coolant level is at or below the minimum mark, add prediluted coolant immediately.

Maintain coolant concentration within 48% to 50%, which equates to a freeze point between -34ºC (-29ºF) and -37ºC (-35ºF). Coolant concentration should be checked using a refractometer. We do not recommend the use of hydrometers or coolant test strips for measuring coolant concentration.

Adding Coolant

WARNING: Keep your hands and clothing clear of the cooling fan.

WARNING: Do not remove the coolant reservoir cap when the engine is on or the cooling system is hot. Wait 10 minutes for the cooling system to cool down. Cover the coolant reservoir cap with a thick cloth to prevent the possibility of scalding and slowly remove the cap. Failure to follow this instruction could result in personal injury.

WARNING: Do not add coolant when the vehicle is on or the cooling system is hot. Failure to follow this instruction could result in personal injury.

WARNING: Do not add coolant further than the ***MAX*** mark.

WARNING: Do not put coolant in the windshield washer reservoir. If sprayed on the windshield, coolant could make it difficult to see through the windshield.

WARNING: Do not allow the fluid to touch your skin or eyes. If this happens, rinse the affected areas immediately with plenty of water and contact your physician.

Ranger (TRA, TRB) Vehicles Built From: 01-11-2024, CG4010en enGBR, Edition date: 202407, DOM

Note: *Do not use stop leak pellets, cooling system sealants, or non-specified additives as they can cause damage to the engine cooling or heating systems. Resulting component damage may not be covered by the vehicle Warranty.*

Note: *Automotive fluids are not interchangeable.*

It is very important to use prediluted coolant approved to the correct specification in order to avoid plugging the small passageways in the engine cooling system. See **Capacities and Specifications** (page 555). Do not mix different colors or types of coolant in your vehicle. Mixing of engine coolants or using an incorrect coolant may harm the engine or cooling system components and could void the vehicle Warranty.

Note: *If prediluted coolant is not available, use the approved concentrated coolant diluting it to 50/50 with deionized or distilled water. See **Capacities and Specifications** (page 555). Using water that has not been deionized may contribute to deposit formation, corrosion and plugging of the small cooling system passageways.*

To top up the coolant level do the following:

1. Unscrew the cap slowly. Any pressure escapes as you unscrew the cap.
2. Add enough prediluted coolant to reach the correct level.

Note: *We do not recommend the use of recycled coolant.*

3. Replace the coolant reservoir cap. Turn the cap clockwise until it contacts the hard stop.
4. Check the coolant level in the coolant reservoir the next few times you drive your vehicle. If necessary, repeat step 2.

If you have to add more than 1 L (1.1 qt) of engine coolant per month, have your vehicle checked as soon as possible. Operating an engine with a low level of coolant can result in engine overheating and possible engine damage.

In case of emergency, you can add a large amount of water without engine coolant in order to reach a vehicle service location. Service your vehicle as soon as possible.

Water alone, without engine coolant, can cause engine damage from corrosion, overheating or freezing.

Do not use the following as a coolant substitute, as they can cause engine damage from overheating or freezing:

- Alcohol.
- Methanol.
- Brine.
- Any coolant mixed with alcohol or methanol antifreeze.

Do not add extra inhibitors or additives to the coolant. These can be harmful and compromise the corrosion protection of the coolant.

Severe Climates

If you drive in extremely cold climates, you may need to increase the coolant concentration above 50%.

Note: *A coolant concentration of 60% provides improved freeze point protection. Coolant concentrations above 60% decrease the overheat protection characteristics of the coolant and could cause engine damage.*

If you drive in extremely hot climates, you may need to decrease the coolant concentration to 40%.

Note: *A coolant concentration of 40% provides improved overheat protection. Coolant concentrations below 40% decrease the overheat and corrosion protection characteristics of the coolant and could cause engine damage.*

Coolant Change

WARNING: Do not dispose of coolant in the household refuse or the public sewage system. Use an authorized waste disposal facility.

Change the coolant at specific mileage intervals. Refer to the scheduled maintenance information.

Note: *Dispose of used coolant in the appropriate manner.*

Follow your community's regulations and standards for recycling and disposing of automotive fluids.

Fail-Safe Cooling

Fail-safe cooling allows you to temporarily drive your vehicle before any incremental component damage occurs. The fail-safe distance depends on ambient temperature, vehicle load and terrain.

How Fail-Safe Cooling Works

WARNING: If you continue to drive your vehicle when the engine is overheating, the engine could stop without warning. Failure to follow this instruction could result in the loss of control of your vehicle.

If the engine begins to overheat, the coolant temperature gauge moves toward the red zone:

A warning lamp illuminates and a message may appear in the information display.

If the engine reaches a preset over-temperature condition, the engine automatically switches to alternating cylinder operation. Each disabled cylinder acts as an air pump and cools the engine.

When this occurs, your vehicle still operates, however:

- Engine power is limited.
- The air conditioning system turns off.

Continued operation increases the engine temperature, causing the engine to completely shut down. Your steering and braking effort increases in this situation.

When the engine temperature cools, you can re-start the engine. Have your vehicle checked as soon as possible to minimize engine damage.

When Fail-Safe Mode Is Activated

WARNING: Fail-safe mode is for use during emergencies only. Operate your vehicle in fail-safe mode only as long as necessary to bring your vehicle to rest in a safe location and seek immediate repairs. When in fail-safe mode, your vehicle will have limited power, will not be able to maintain high-speed operation, and may completely shut down without warning, potentially losing engine power, power steering assist, and power brake assist, which may increase the possibility of a crash resulting in serious injury.

Ranger (TRA, TRB) Vehicles Built From: 01-11-2024, CG4010en enGBR, Edition date: 202407, DOM

WARNING: Do not remove the coolant reservoir cap when the engine is on or the cooling system is hot. Wait 10 minutes for the cooling system to cool down. Cover the coolant reservoir cap with a thick cloth to prevent the possibility of scalding and slowly remove the cap. Failure to follow this instruction could result in personal injury.

Your vehicle has limited engine power when in the fail-safe mode, drive your vehicle with caution. Your vehicle does not maintain high-speed operation and the engine could operate poorly.

Remember that the engine is capable of automatically shutting down to prevent engine damage. In this situation:

1. Pull off the road as soon as safely possible and switch the engine off.
2. If you are a member of a roadside assistance program, we recommend that you contact your roadside assistance service provider.
3. If this is not possible, wait for a short period of time for the engine to cool.
4. Check the coolant level. If the coolant level is at or below the minimum mark, add prediluted coolant immediately.
5. When the engine temperature cools, you can re-start the engine. Have your vehicle checked as soon as possible to minimize engine damage.

Note: *If you continue to drive your vehicle in fail-safe mode without repairing it, you will damage your engine.*

Engine Coolant Temperature Management

WARNING: To reduce the risk of crash and injury, be prepared that the vehicle speed may reduce and the vehicle may not be able to accelerate with full power until the coolant temperature reduces.

If you tow a trailer with your vehicle, the engine may temporarily reach a higher temperature during severe operating conditions, for example ascending a long or steep grade in high ambient temperatures.

At this time, you may notice the coolant temperature gauge moves toward the red zone and a message may appear in the information display.

You may notice a reduction in vehicle speed caused by reduced engine power in order to manage the engine coolant temperature. Your vehicle may enter this mode if certain high-temperature and high-load conditions take place. The amount of speed reduction depends on vehicle loading, grade and ambient temperature. If this occurs, there is no need to stop your vehicle. You can continue to drive.

The air conditioning may automatically turn on and off during severe operating conditions to protect the engine from overheating. When the coolant temperature decreases to the normal operating temperature, the air conditioning turns on.

If the coolant temperature gauge moves fully into the red zone, or if the coolant temperature warning or service engine soon messages appear in your information display, do the following:

1. Stop your vehicle as soon as it is safe to do so. Fully apply the parking brake, shift into park (P) or neutral (N).
2. Leave the engine running until the coolant temperature gauge needle returns to the normal position. If the temperature does not drop after several minutes, follow the remaining steps.
3. Switch the engine off and wait for it to cool. Check the coolant level.
4. If the coolant level is at or below the minimum mark, add prediluted coolant immediately.
5. If the coolant level is normal, restart the engine and continue.

ENGINE AIR FILTER

CHANGING THE ENGINE AIR FILTER - 2.3L ECOBOOST™, HYBRID ELECTRIC VEHICLE (HEV)

WARNING: To reduce the risk of vehicle damage and personal burn injuries, do not start your engine with the air cleaner removed and do not remove it while the engine is running.

Change the air filter element at the correct service interval.

Use the correct specification air filter element.

Note: *Failure to use the correct air filter element may result in severe engine damage. Resulting component damage may not be covered by the vehicle warranty.*

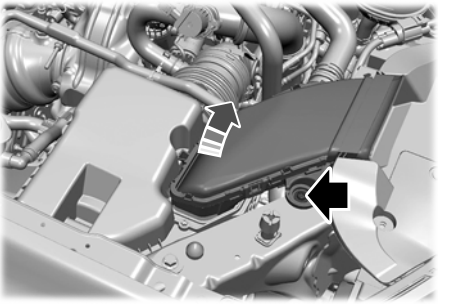

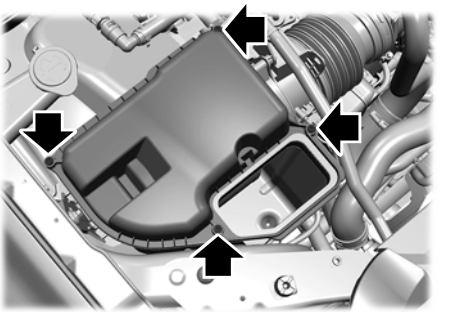

1. Remove the fastener and the air intake duct.
2. Remove the screws from the air filter housing cover.
3. Carefully lift the air filter housing cover. Take care to avoid other surrounding components while lifting.
4. Remove the air filter element from the air filter housing.
5. Wipe any dirt or debris from the air filter housing and cover to make sure no dirt gets in the engine and that you have a good seal.

Ranger (TRA, TRB) Vehicles Built From: 01-11-2024, CG4010en enGBR, Edition date: 202407, DOM

6. Install a new air filter element. Be careful not to crimp the filter element edges between the air filter housing and cover.
7. Install the air filter housing cover.
8. Tighten the fasteners to 2.8 Nm (2.07 lb.ft).
9. Install the air intake duct, tighten the fastener to 11 Nm (8.11 lb.ft).

CHANGING THE ENGINE AIR FILTER - 3.0L ECOBOOST™

WARNING: To reduce the risk of vehicle damage and personal burn injuries, do not start your engine with the air cleaner removed and do not remove it while the engine is running.

Change the air filter element at the proper intervals.

When changing the air filter element, use only the air filter element listed. See **Capacities and Specifications** (page 555).

Note: *Failure to use the correct air filter element could result in severe engine damage that the vehicle warranty may not cover.*

Note: *When servicing the air filter, do not allow foreign material to enter the air induction system. The engine is susceptible to damage from even small particles.*

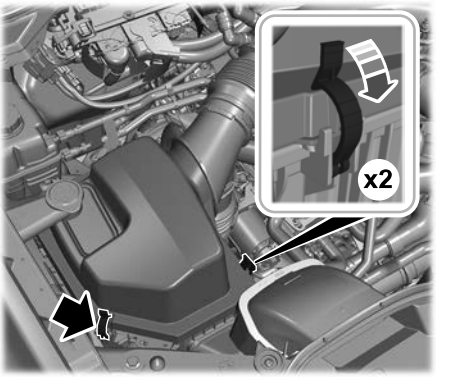

1. Release the two clips securing the air filter housing cover to the housing.
2. Carefully lift the air filter housing cover.
3. Remove the air filter element from the air filter housing.
4. To install, reverse the removal procedure.

CHANGING THE ENGINE AIR FILTER - DIESEL

WARNING: To reduce the risk of vehicle damage and personal burn injuries, do not start your engine with the air cleaner removed and do not remove it while the engine is running.

Change the air filter element at the correct service interval.

Use the correct specification air filter element.

Note: *Failure to use the correct air filter element may result in severe engine damage. Resulting component damage may not be covered by the vehicle warranty.*

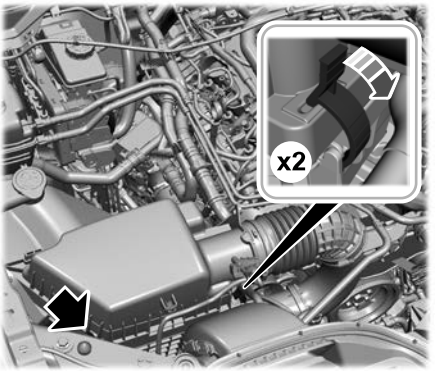

1. Release the clamps that secure the air filter cover to the housing.
2. Unclip the wiring loom from the air-cleaner lid.
3. Carefully lift the air filter housing cover. Take care to avoid other surrounding components while lifting.

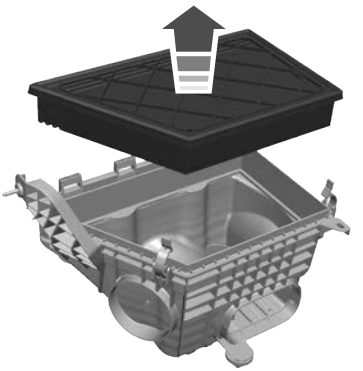

4. Remove the air filter element from the air filter housing.
5. Wipe any dirt or debris from the air filter housing and cover to make sure no dirt gets in the engine and that you have a good seal.
6. Install a new air filter element. Be careful not to crimp the filter element edges between the air filter housing and cover.
7. Install the air filter housing cover.
8. Refit the wiring loom clip to the air filter housing.
9. Engage the clips to secure the air filter housing cover to the air filter housing.

DRAINING THE FUEL FILTER WATER TRAP - DIESEL

WARNING: Do not drain the water-in-fuel separator while the engine is running. Failure to follow this warning may result in fire, serious injury, death or property damage.

WARNING: Do not dispose of fuel in the household refuse or the public sewage system. Use an authorized waste disposal facility.

Your vehicle's fuel system has a fuel filter and water separator to remove water from the fuel.

If the water in fuel indicator illuminates when the engine is running, stop your vehicle as soon as safely possible, shut off the engine, then drain the fuel and water separator.

Note: *Allowing water to stay in the fuel system after the water in fuel indicator illuminates could result in extensive damage or failure of the fuel injection system.*

The fuel water trap is beneath the frame rail under the driver side of the vehicle.

Make sure the ignition is off before performing the following steps.

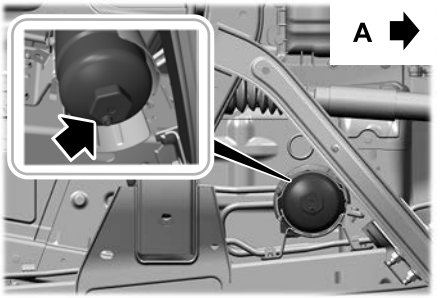

A Front of Vehicle.

1. Loosen the drain plug approximately one and a half turns.
2. Allow the water to drain.
3. Tighten the drain plug until you feel a strong resistance.
4. Switch the ignition on for 30 seconds, then switch the ignition off. Repeat twice.
5. Start the engine.
6. Check for leaks.

Note: *The water in fuel warning lamp turns off after approximately two seconds with the engine running.*

Note: *The in-tank pump will turn off automatically after approximately 30 seconds.*

CHANGING THE FUEL FILTER - DIESEL

Your fuel filters must be changed at the correct service interval or when you see the low fuel pressure message appear. Refer to scheduled maintenance for the correct service interval.

CHANGING THE FUEL FILTER - GASOLINE

Replace the fuel filter on your vehicle at the specified service interval. Refer to your scheduled maintenance information.

DRIVE BELT ROUTING OVERVIEW - 2.0L DIESEL

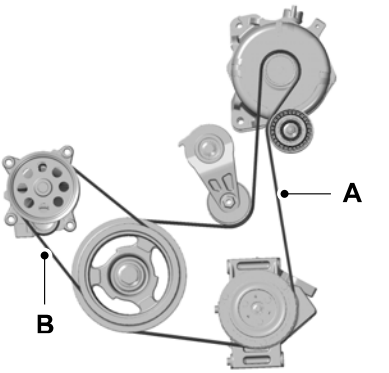

A. Long drive belt is on the first pulley groove closest to the engine.

B. Short drive belt is on the second pulley groove farthest from the engine.

DRIVE BELT ROUTING OVERVIEW - 2.3L ECOBOOST™

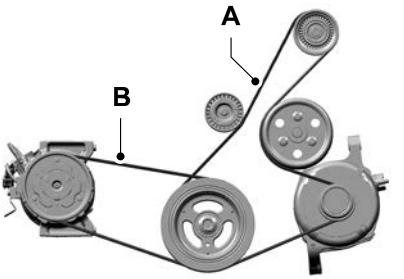

A. Long drive belt is on the first pulley groove closest to engine.

B. Short drive belt is on the second pulley groove farthest from engine.

DRIVE BELT ROUTING OVERVIEW - 3.0L ECOBOOST™

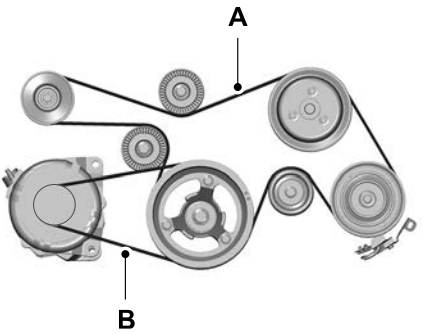

A. Long drive belt is on the first pulley groove closest to engine.

B. Short drive belt is on the second pulley groove farthest from engine.

DRIVE BELT ROUTING OVERVIEW - 3.0L DIESEL

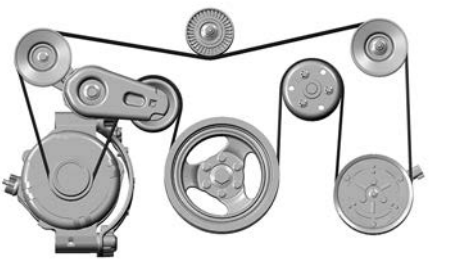

Ranger (TRA, TRB) Vehicles Built From: 01-11-2024, CG4010en enGBR, Edition date: 202407, DOM

12V BATTERY

12V BATTERY PRECAUTIONS

WARNING: Batteries normally produce explosive gases which can cause personal injury. Therefore, do not allow flames, sparks or lighted substances to come near the battery. When working near the battery, always shield your face and protect your eyes. Always provide correct ventilation.

WARNING: When lifting a plastic-cased battery, excessive pressure on the end walls could cause acid to flow through the vent caps, resulting in personal injury and damage to the vehicle or battery. Lift the battery with a battery carrier or with your hands on opposite corners.

WARNING: Keep batteries out of reach of children. Batteries contain sulfuric acid. Avoid contact with skin, eyes or clothing. Shield your eyes when working near the battery to protect against possible splashing of acid solution. In case of acid contact with skin or eyes, flush immediately with water for a minimum of 15 minutes and get prompt medical attention. If acid is swallowed, call a physician immediately.

WARNING: Battery posts, terminals and related accessories contain lead and lead compounds, chemicals known to the State of California to cause cancer and reproductive harm. **Wash your hands after handling**.

WARNING: This vehicle may have more than one battery. Removing the battery cables from only one battery does not disconnect your vehicle electrical system. Make sure you disconnect the battery cables from all batteries when disconnecting power. Failure to do so may cause serious personal injury or property damage.

WARNING: For vehicles with Auto-Start-Stop the battery requirement is different. You must replace the battery with one of exactly the same specification.

WHAT IS THE BATTERY MANAGEMENT SYSTEM

The battery management system monitors battery conditions and takes actions to extend battery life.

HOW DOES THE BATTERY MANAGEMENT SYSTEM WORK

If excessive battery drain is detected, the system temporarily disables some electrical systems to protect the battery.

Systems included are:

- Heated rear window.
- Heated seats.
- Climate control.
- Heated steering wheel.
- Audio unit.
- Navigation system.

A message could appear in the information display to alert you that battery protection actions are active. This message is only for notification that an action is taking place, and not intended to indicate an electrical problem or that the battery requires replacement.

Ranger (TRA, TRB) Vehicles Built From: 01-11-2024, CG4010en enGBR, Edition date: 202407, DOM

BATTERY MANAGEMENT SYSTEM LIMITATIONS

After battery replacement, or in some cases after charging the battery with an external charger, the battery management system requires eight hours of vehicle sleep time to relearn the battery state of charge. During this time, your vehicle must remain fully locked with the ignition switched off.

Note: *Prior to relearning the battery state of charge, the battery management system could temporarily disable some electrical systems.*

Electrical Accessory Installation

To make sure the battery management system works correctly, do not connect an electrical device ground connection directly to the battery negative post. This can cause inaccurate measurements of the battery condition and potential incorrect system operation.

Note: *If you add electrical accessories or components to the vehicle, it could adversely affect battery performance and durability. This could also affect the performance of other electrical systems in the vehicle.*

CHANGING THE 12V BATTERY

The battery is in the engine compartment. See **Maintenance** (page 477).

Your vehicle has a maintenance-free battery. It does not require additional water during service.

If the vehicle battery has a cover, make sure you correctly install it after cleaning or replacing the battery.

For longer, trouble-free operation, keep the top of the battery clean and dry and the battery cables tightly fastened to the battery terminals. If any corrosion is present on the battery or terminals, remove the cables from the terminals and clean with a wire brush. You can neutralize the acid with a solution of baking soda and water.

We recommend that you disconnect the negative battery cable terminal from the battery if you plan to store your vehicle for an extended period.

Note: *If you only disconnect the negative battery cable terminal, make sure it is isolated or placed away from the battery terminal to avoid unintended connection or arcing.*

If you disconnect or replace the battery and your vehicle has an automatic transmission, it must relearn its adaptive strategy. Because of this, the transmission may shift firmly when first driven. This is normal operation while the transmission fully updates its operation to optimum shift feel.

Removing the Battery

1. Apply the parking brake and switch the ignition off.
2. Switch all electrical equipment off, for example lights and radio.
3. Wait a minimum of two minutes before disconnecting the battery.

Note: *The engine management system has a power hold function and remains powered for a period of time after you switch the ignition off. This is to allow diagnostic and adaptive tables to be stored. Disconnecting the battery without waiting can cause damage not covered by the vehicle Warranty.*

4. Disconnect and isolate the negative battery cable terminal.

Ranger (TRA, TRB) Vehicles Built From: 01-11-2024, CG4010en enGBR, Edition date: 202407, DOM

5. Disconnect and isolate the positive battery cable terminal.
6. Remove the battery securing clamp.
7. Remove the battery.

If you disconnect or replace the vehicle battery, you must reset the following features:

- Window bounce-back. See **Window Bounce-Back** (page 114).
- Clock Settings.
- Pre-set radio stations.

Replacing the Battery

Note: *Before reconnecting the battery, make sure the ignition remains switched off.*

You must replace the battery with one of exactly the same specification.

To install, reverse the removal procedure.

Note: *Make sure that you correctly install the battery terminal covers, battery cover and battery cable terminals.*

RESETTING THE BATTERY SENSOR

When you install a new battery, reset the battery sensor by doing the following:

1. Switch the ignition on, and leave the engine off.

Note: *Complete Steps 2 and 3 within 10 seconds.*

2. Flash the high beam headlamps five times, ending with the high beams off.
3. Press and release the brake pedal three times.

The battery warning lamp flashes three times to confirm that the reset is successful.

RECYCLING AND DISPOSING OF THE 12V BATTERY

Make sure that you dispose of old batteries in an environmentally friendly way. Seek advice from your local authority about recycling old batteries.

12V BATTERY – TROUBLESHOOTING

12V BATTERY – WARNING LAMPS

If it illuminates while driving, it indicates a charging system error. Switch off all unnecessary electrical equipment and have your vehicle immediately checked.

12V BATTERY – INFORMATION MESSAGES

Message	Details
Check Charging system	The charging system needs servicing. If the warning stays on or continues to come on, have your vehicle checked as soon as possible.
Charging system Service soon	The charging system needs servicing. If the warning stays on or continues to come on, have your vehicle checked as soon as possible.
Charging system Service now	The charging system needs servicing. Have your vehicle immediately checked.
Battery state of charge low	The battery management system determines that the 12V battery is at a low state of charge. Start the engine to charge the battery or charge the battery using an aftermarket battery charger. Always use the vehicle ground point when connecting the negative cable of the external battery charger. See **Jump Starting the Vehicle** (page 452). This message clears once you restart your vehicle and the battery state of charge has recovered. Do not switch on the ignition when a battery charger is in use to charge the battery.
Turn power off to save battery	The battery management system determines that the battery is at a low state of charge. Turn the ignition off as soon as possible to protect the battery. This message will clear once the vehicle has been started and the battery state of charge has recovered. Turning off unnecessary electrical loads will allow faster battery state-of-charge recovery.
Electrical power saver active Some features turned off See manual	Displayed when the battery management system detects an extended low-voltage condition. Various vehicle features will be disabled to help preserve the battery. Turn off as many of the electrical loads as soon as possible to improve system voltage. If the system voltage has recovered, the disabled features will operate again as normal.

ADJUSTING THE HEADLAMPS

Vertical Aim Adjustment

The headlamps on your vehicle are properly aimed at the assembly plant. If your vehicle has been in an accident, contact an authorized dealer to check and realign your headlamps.

Headlamp Aiming Target

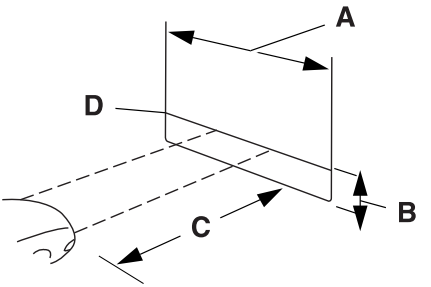

A 15 feet (4.5 m).

B Center height of lamp to ground (measurement B is relative to vehicle height).

C 35 feet (10 m).

D B height minus 100 mm.

1. Park your vehicle directly in front of a wall or screen on a level surface, approximately 10 m (35 ft) away.
2. Measure height from the center of the low beam to the ground and, from this measurement, deduct 4 in (10cm) and add a reference line 15 ft (4.5 m) wide on vertical wall or screen at this height. A piece of masking tape works well.

Note: *There may be an identifying mark on the lens to help you locate the center of the headlamp low beam light.*

3. Switch on the low beam headlamps to illuminate the wall or screen and open the hood. Cover one of the headlamps so no light hits the wall.

4. On the wall or screen, observe a light pattern with a distinct horizontal edge toward the right. If this edge is not at the horizontal reference line, adjust the beam so the edge is at the same height as the horizontal reference line.

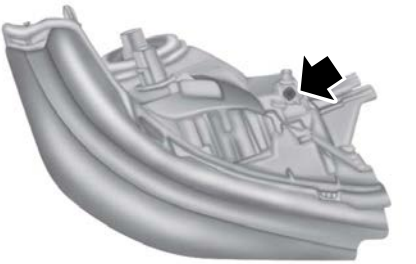

5. Locate the vertical adjuster on each headlamp. Use a screwdriver to turn the adjuster either counterclockwise or clockwise to adjust the vertical aim of the headlamp.
6. Repeat Steps 3 through 7 to adjust the other headlamp.
7. Close the hood and switch off the headlamps.

Horizontal Aim Adjustment

Horizontal aim is not required for this vehicle and is not adjustable.

EXTERIOR BULBS

EXTERIOR BULB SPECIFICATION CHART

Replacement bulbs are specified in the chart below. The correct bulbs will not damage the lamp assembly or void the lamp assembly warranty and provide quality bulb illumination time.

Lamp	Specification	Power (Watt)
Center high mounted cargo lamp. Vehicles with pickup box.	LED	LED
Daytime running lamp.	Low Series - W21/5W Mid and High Series - LED	Low Series - 21W Mid and High Series - LED
Front position lamp.	Low - W21/5W (lamps with DTRL) Low - W5W (lamps without DTRL) Mid and High - LED	Low - 5W Mid and High - LED
Front turn signal.	Low and Mid Series - PY21W High Series - LED	Mid and Low Series - 21W High Series - LED
Front fog lamp.	Low Series - H11 Mid and High Series - LED	Low Series - 55W Mid and High Series - LED
Headlamp low beam.	Low Series - H7 Mid and High Series - LED	Low Series - 55W Mid and High Series - LED
Headlamp high beam.	Low Series - HB3 Mid and High Series - LED	Low Series - 65W Mid and High Series - LED
License plate lamp.	Low Series - W5W Mid and High Series - LED	Low Series - 5W Mid and High Series - LED
Puddle lamp.	LED	LED
Rear cargo box lamp.	LED	LED
Rear turn signal.	Low and Mid Series - WY21W High Series - LED	Low and Mid Series - 21W High Series - LED
Rear lamp, stop lamp.	Low Series - W21/5W	Low Series - 21W

Lamp	Specification	Power (Watt)
	Mid and High Series - LED	Mid and High Series - LED
Rear position lamp.	Low Series - W21/5W Mid and High Series - LED	Low Series - 5W Mid and High Series - LED
Reversing lamp.	Low and Mid Series - W16W High Series - LED	Low and Mid Series - 16W High Series - LED
Rear fog.	Low and Mid Series - W21W High Series - LED	Low and Mid Series - 21W High Series - LED

Note: *LED lamps are not serviceable. See an authorized dealer if they fail.*

REMOVING A REAR LAMP ASSEMBLY

1. Make sure the headlamps and rear lamps are off.
2. Open the tailgate to access the rear lamp assemblies.

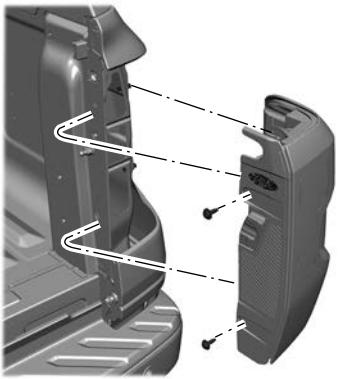

3. Remove the two bolts from the tail lamp assembly. Carefully pull the lamp assembly from the tailgate pillar.
4. Disconnect the electrical connector from the bulb.
5. To install, reverse the removal procedure.

CHANGING A HEADLAMP BULB

WARNING: Make sure the bulbs have cooled down before removing them. Failure to follow this warning could result in serious personal injury.

Accessing and Replacing the Low Beam Headlamp Bulbs

1. Make sure the headlamps are off.
2. Remove the scrivet from the modesty panel.
3. Remove the modesty panel section.

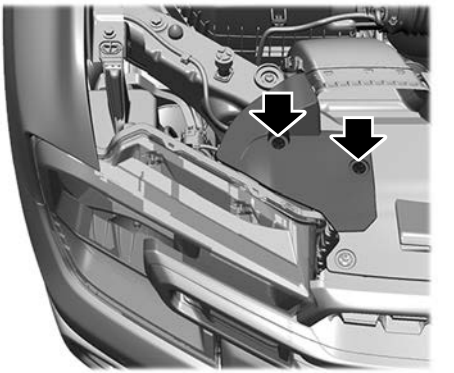

4. Remove the scrivet from the front fender and the hardware from the bolster.

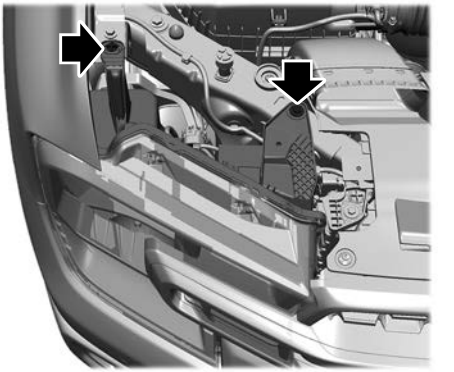

5. Using a screwdriver loosen, but do not remove, the three screws by turning them two full turns.

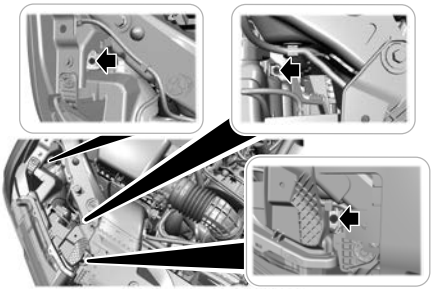

6. Carefully slide the headlamp assembly forward approximately 30 mm (1.2 in), do not remove the headlamp. Be careful of the sharp fender edge, as it could damage the headlamp.

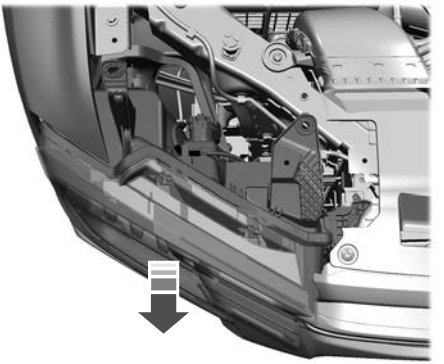

7. Rotate the low beam bulb cap counterclockwise and remove it from the vehicle.

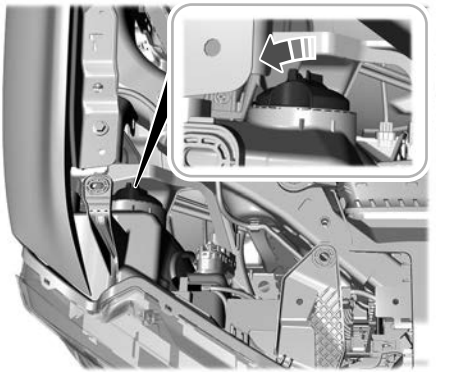

8. Disconnect the electrical connector from the bulb.
9. Place your hand behind the headlamp and push the retainer toward the lamp and down.
10. Move the bulb retainer away from the bulb and remove the bulb.

11. To install the bulb, reverse the removal steps.

Note: *Handle a halogen headlamp bulb carefully and keep out of children's reach. Handle the bulb only by its plastic base and do not touch the glass. The oil from your hand could cause the bulb to break the next time the headlamps are operated.*

Note: *If the bulb is accidentally touched, clean it with rubbing alcohol before installing it.*

Accessing and Replacing the High Beam Headlamp Bulbs

1. Make sure the headlamps are off.
2. Remove the scrivet from the modesty panel.
3. Remove the modesty panel section.

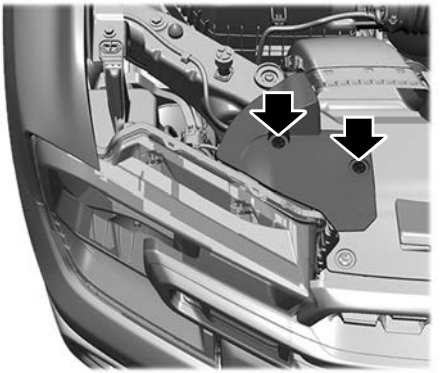

4. Remove the scrivet from the front fender and the hardware from the bolster.

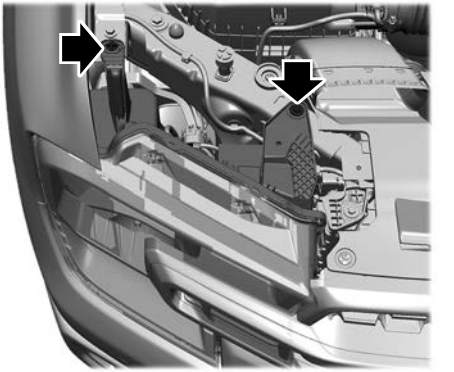

5. Using a screwdriver loosen, but do not remove, the three screws by turning them two full turns.

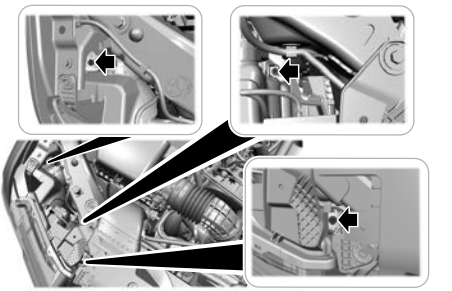

6. Carefully slide the headlamp assembly forward approximately 30 mm (1.2 in),do not remove the headlamp. Be careful of the sharp fender edge, as it could damage the headlamp.

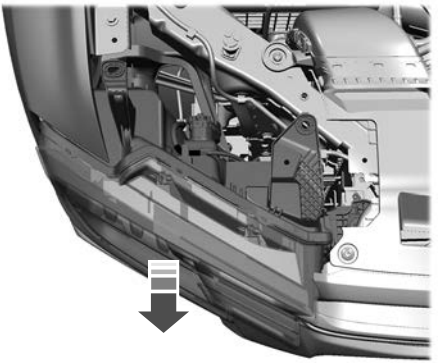

7. Reach into the space below the low beam socket.

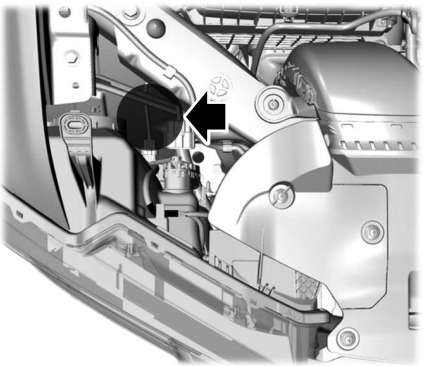

8. Disconnect the electrical connector from the bulb.
9. Rotate the high beam bulb socket counterclockwise and remove the high beam bulb.

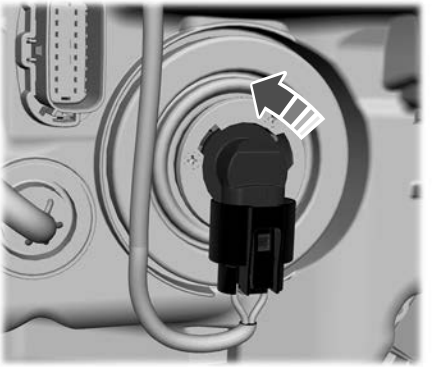

10. To install the bulb, reverse the removal steps.

Note: *Handle a halogen headlamp bulb carefully and keep out of children's reach. Handle the bulb only by its plastic base and do not touch the glass. The oil from your hand could cause the bulb to break the next time the headlamps are operated.*

Note: *If the bulb is accidentally touched, clean it with rubbing alcohol before installing it.*

CHANGING A FRONT TURN SIGNAL LAMP BULB

WARNING: Make sure the bulbs have cooled down before removing them. Failure to follow this warning could result in serious personal injury.

Changing a Front Turn Signal Lamp Bulb with Halogen Headlamps

1. Make sure the headlamps and the front turn signal lamps are off.
2. Remove the scrivet from the modesty panel.
3. Remove the modesty panel section.

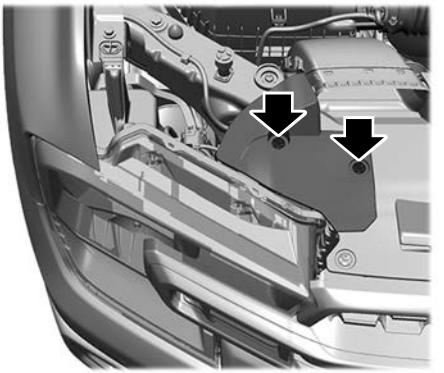

4. Reach behind the headlamp assembly and rotate the bulb socket counterclockwise to remove it from the headlamp assembly.
5. Remove the bulb from the socket.

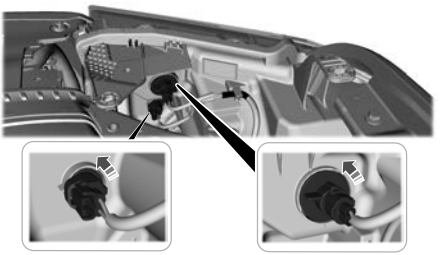

6. To install the bulb, reverse the removal steps.

Changing a Front Turn Signal Lamp Bulb with Mid Level Headlamps

1. Make sure the headlamps and the front turn signal lamps are off.
2. Remove the scrivet from the modesty panel.
3. Remove the modesty panel section.

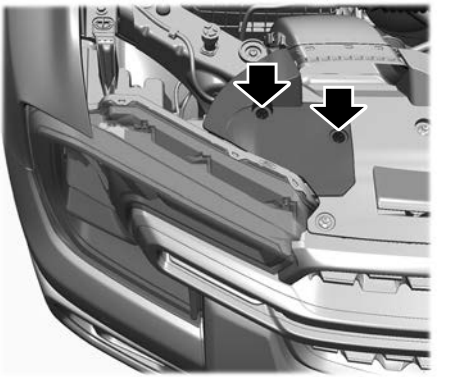

4. Rotate the low beam bulb cap counterclockwise and remove it from the headlamp assembly.

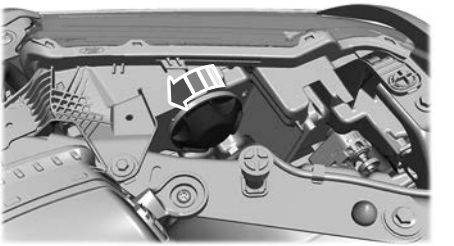

5. Reach behind the headlamp assembly and rotate the bulb socket counterclockwise to remove it from the headlamp assembly.
6. Remove the bulb from the socket.

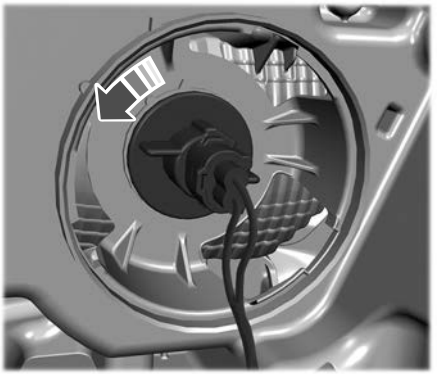

7. To install the bulb, reverse the removal steps.

CHANGING A FRONT SIDE MARKER LAMP BULB

1. Rotate the steering wheel to the opposite side of the bulb needing replacement.

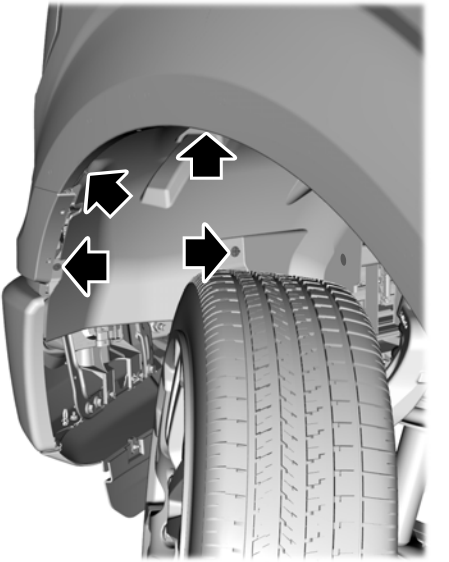

2. Remove the screws and push pins from the front of the wheel liner.
3. Pull the wheel liner back toward the tire to gain access to the bulb.

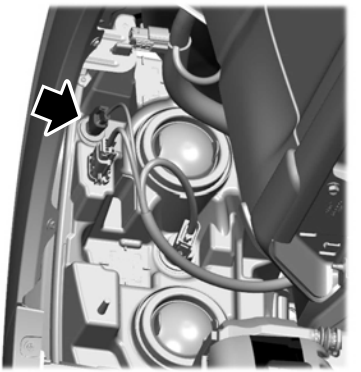

4. Remove the bulb holder from the lamp assembly by turning it counterclockwise and pulling it straight out.
5. Disconnect the bulb from the electrical connector.
6. To install, reverse the removal procedure.

CHANGING A FRONT FOG LAMP BULB

1. Make sure the fog lamps are off.
2. Disconnect the electrical connector from the fog lamp bulb.
3. Turn the bulb counterclockwise and remove it from the fog lamp.
4. To install, reverse the removal procedure.

CHANGING A REAR LAMP BULB

Low Series

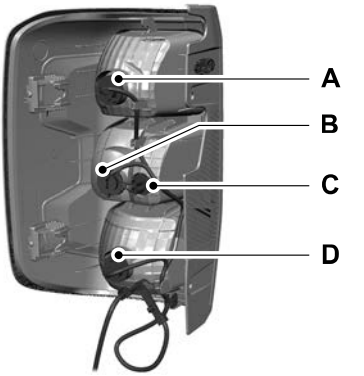

A	Tail lamp and stop lamp bulb.
B	Turn signal bulb.
C	Reverse bulb.
D	Rear Fog lamp bulb.

Mid Series

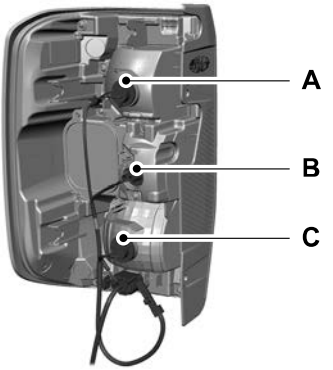

A Turn signal bulb.
B Reverse bulb.
C Rear Fog lamp bulb.

1. Remove the rear lamp assembly. See **Removing a Rear Lamp Assembly** (page 501).
2. Rotate the bulb socket counterclockwise and remove it from the rear lamp assembly.
3. Remove the bulb from the bulb socket.
4. To install, reverse the removal procedure.

INTERIOR BULBS

INTERIOR BULB SPECIFICATION CHART

Your vehicle has LED lamps. These are not serviceable items. See an authorized dealer if they fail.

CLEANING THE EXTERIOR

CLEANING THE EXTERIOR PRECAUTIONS

Do not drive your vehicle through an automatic car wash due to the vehicle's tire width and track. Wash your vehicle by hand or by using a touchless car wash with no mechanical tracks on the floor.

Note: *If you intend to park your vehicle for an extended period after cleaning, drive it for few minutes before parking. This reduces the risk of corrosion of the brake discs, brake pads and linings.*

CLEANING HEADLAMPS AND REAR LAMPS

We recommend that you only use cold or lukewarm water containing car shampoo to clean the headlamps and the rear lamps.

Do not scrape the lamps.

Do not wipe lamps when they are dry.

CLEANING WINDOWS AND WIPER BLADES

To clean the windshield and wiper blades:

- Clean the windshield with a non-abrasive glass cleaner.

Note: *When cleaning the interior of the windshield, avoid getting any glass cleaner on the instrument panel or door panels. Wipe any glass cleaner off these surfaces immediately.*

- Clean the wiper blades with washer fluid or water applied with a soft sponge or cloth.

Note: *Do not use razor blades or other sharp objects to clean or remove decals from the inside of the heated rear window. This can cause damage not covered by the vehicle Warranty.*

Note: *We recommend cleaning the power sliding rear window at regular intervals to avoid dust and debris accumulation to deliver appropriate function.*

CLEANING CHROME, ALUMINIUM OR STAINLESS STEEL

We recommend that you only use a car shampoo, a soft cloth and water on bumpers and other chrome, aluminium or stainless steel parts.

Note: *For additional information and assistance, we recommend that you contact an authorized dealer.*

Note: *Rinse the area well after cleaning.*

Note: *Do not use abrasive materials, for example steel wool or plastic pads, as they can scratch these surfaces.*

Note: *Do not use chrome cleaner, metal cleaner or polish on wheels or wheel covers.*

CLEANING WHEELS

Only use a recommended wheel and tire cleaner to clean the wheels. For additional information and assistance, we recommend that you contact an authorized dealer.

1. Use a sponge to remove heavy deposits of dirt and brake dust.
2. Rinse well after cleaning.

Note: *Do not apply a cleaning chemical to warm or hot wheel rims and covers.*

Ranger (TRA, TRB) Vehicles Built From: 01-11-2024, CG4010en enGBR, Edition date: 202407, DOM

If you intend to park your vehicle for an extended period after cleaning the wheels, drive it for few minutes before parking. This reduces the risk of corrosion of the brake discs, brake pads and linings.

Do not clean the wheels when they are hot.

Note: *Some car washes could damage wheel rims and covers.*

Note: *Using non-recommended cleaners, harsh cleaning products, chrome wheel cleaners or abrasive materials could damage wheel rims and covers.*

CLEANING THE ENGINE COMPARTMENT

Use a vacuum cleaner to remove debris from the screen area below the windshield.

Note: *If you are not familiar with the parts around the engine do not wash the engine compartment. Avoid frequent engine washes.*

When washing the engine compartment:

- Never wash or rinse the engine while it is hot or running.
- Never wash or rinse any ignition coil, spark plug wire or spark plug well.
- Cover the battery, power distribution box, and air filter assembly to prevent water damage.

Note: *If your vehicle has an engine cover remove the cover before application of shampoo and degreaser.*

- Spray an approved engine shampoo and degreaser on all parts that require cleaning and rinse with water.

Note: *Follow the manufacturer's instructions for using engine shampoo and degreaser.*

CLEANING STRIPES OR GRAPHICS

High pressure water can damage stickers.

It is recommended to wash your vehicle by hand however, pressure washing may be used under the following conditions:

- Use a spray with a minimum of 40º wide spray angle pattern.
- Keep the nozzle 30 cm (12 in) and at a 90º angle to your vehicle.
- Do not use water pressure higher than 6,895 kPa (1,000 psi).
- Do not use water hotter than 23ºC (73ºF).

Note: *Holding the pressure washer nozzle at an angle to the vehicle's surface may damage graphics and cause the edges to peel away.*

CLEANING CAMERA LENSES AND SENSORS

We recommend that you only use lukewarm or cold water and a soft cloth to clean the camera lens and sensors.

Note: *Do not pressure wash camera lens and sensors.*

CLEANING THE UNDERBODY

Flush the complete underside of your vehicle frequently. Keep the body and door drain holes free of packed dirt.

Ranger (TRA, TRB) Vehicles Built From: 01-11-2024, CG4010en enGBR, Edition date: 202407, DOM

Rear suspension components and the complete underbody require regular cleaning with a power washer or a thorough rinse with a strong stream of water if the vehicle is operated in coastal areas, dusty or muddy environments. Rear leaf springs or other suspension components may emit squeaking or popping noises while operating the vehicle if particles, such as dirt, rocks, or other debris, are present in the components.

Note: *If you intend to park your vehicle for an extended period after cleaning the underbody, drive it for few minutes before parking. This reduces the risk of corrosion of the brake discs, brake pads and linings.*

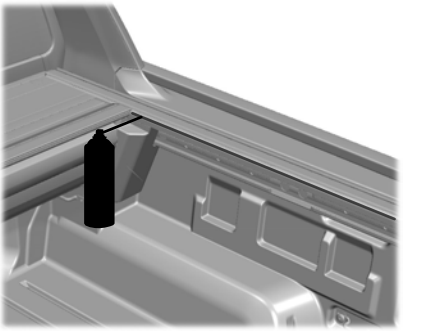

CLEANING THE ROLLER SHUTTER

If normal operation slows, becomes noisy or the power roller shutter incorrectly bounces back during travel, follow the outlined maintenance recommendations. Regular maintenance improves the smooth and correct operation of the roller shutter.

We recommend that you clean and lubricate the roller shutter as follows:

- Clean the seals, profiles and side rails using a soft, damp cloth and a mild soap water solution.
- Thoroughly dry the roller shutter prior to application of the lubricant.
- Lubricate the side rails and both canister end panels of the roller shutter regularly with silicone spray for a minimum of 5 seconds using a straw applicator directed into the corners between the top cover and main curtain profiles.

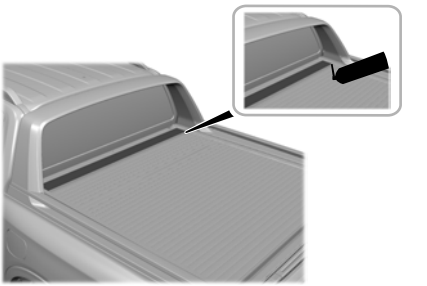

Note: *Immediately after the lubricant has been applied, cycle the roller shutter open and closed as needed to help the lubricant spread throughout the system.*

Note: *For additional information and assistance, we recommend that you contact an authorized dealer.*

Ranger (TRA, TRB) Vehicles Built From: 01-11-2024, CG4010en enGBR, Edition date: 202407, DOM

CLEANING THE INTERIOR

CLEANING THE INSTRUMENT PANEL

WARNING: Do not use chemical solvents or strong detergents when cleaning the steering wheel or instrument panel to avoid contamination of the airbag system.

We recommend that you only clean the instrument panel and cluster lens with a damp soft cloth. Dry the area with a clean, soft cloth.

For additional information and assistance, we recommend that you contact an authorized dealer.

Note: *Avoid cleaners or polishes that increase the gloss of the upper portion of the instrument panel. The dull finish in this area helps protect you from undesirable windshield reflection.*

CLEANING PLASTIC

We recommend that you only use a mild soap and water solution on a soft cloth. Dry the area with a clean, soft cloth.

CLEANING DISPLAYS AND SCREENS

We recommend that you only use a microfiber cloth in a circular motion to clean off the fingerprint or dust.

Note: *Do not pour or spray alcohol onto the touchscreen.*

Note: *Do not use detergent or any type of solvent to clean the touchscreen.*

CLEANING FABRIC

WARNING: On vehicles equipped with seat-mounted airbags, do not use chemical solvents or strong detergents. Such products could contaminate the side airbag system and affect performance of the side airbag in a crash.

We recommend that you only clean fabric in the following way:

1. Remove dust and loose dirt with a vacuum cleaner.
2. Wipe the surface with a soft, damp cloth and a mild soap and water solution. Dry the area with a clean, soft cloth.
3. For additional information and assistance, we recommend that you contact an authorized dealer.

For heavy stains, spot clean the area. If a ring forms on the fabric, clean the entire area immediately, but do not oversaturate or the ring could set.

CLEANING LEATHER

WARNING: On vehicles equipped with seat-mounted airbags, do not use chemical solvents or strong detergents. Such products could contaminate the side airbag system and affect performance of the side airbag in a crash.

We recommend that you only clean the leather surfaces in the following way:

1. Remove dust and loose dirt with a vacuum cleaner.
2. Wipe the surface with a soft, damp cloth and a mild soap and water solution. Dry the area with a clean, soft cloth.

3. Make sure the leather is dry, then apply a small amount of conditioner to a clean, dry cloth.
4. Rub the conditioner into the leather until it disappears. Allow the conditioner to dry, then repeat the process for the entire interior. If a film appears, wipe it off with a dry, clean cloth.
5. For additional information and assistance, we recommend that you contact an authorized dealer.

CLEANING VINYL

WARNING: On vehicles equipped with seat-mounted airbags, do not use chemical solvents or strong detergents. Such products could contaminate the side airbag system and affect performance of the side airbag in a crash.

We recommend that you only clean vinyl surfaces in the following way:

1. Remove dust and loose dirt with a vacuum cleaner.
2. Wipe the surface with a soft, damp cloth and a mild soap and water solution. Dry the area with a clean, soft cloth.
3. For additional information and assistance, we recommend that you contact an authorized dealer.

CLEANING CARPETS AND FLOOR MATS

We recommend that you only clean your carpets in the following way:

1. Remove dust and loose dirt with a vacuum cleaner.
2. Wipe the surface with a soft, damp cloth and a mild soap and water solution. Dry the area with a clean, soft cloth.
3. For additional information and assistance, we recommend that you contact an authorized dealer.

For heavy stains, spot clean the area. If a ring forms on the fabric, clean the entire area immediately, but do not oversaturate or the ring could set.

We recommend that you only clean your floor mats in the following way:

1. Remove dust and loose dirt with a vacuum cleaner.
2. Wash rubber floor mats using mild soap and lukewarm or cold water.
3. Completely dry the floor mat before placing them back in your vehicle.

CLEANING SEATBELTS

WARNING: Do not use cleaning solvents, bleach or dye on the vehicle's seatbelts, as these actions may weaken the belt webbing.

1. Wipe the surface with a soft, damp cloth and a mild soap and water solution. Dry the area with a clean, soft cloth.

REPAIRING MINOR PAINT DAMAGE

We recommend that you contact an authorized dealer to identify your vehicle color code. Authorized dealers have touch-up paint to match your vehicle's color.

Ranger (TRA, TRB) Vehicles Built From: 01-11-2024, CG4010en enGBR, Edition date: 202407, DOM

Before repairing minor paint damage, use a cleaner to remove particles such as bird droppings, tree sap, insect deposits, tar spots, road salt and industrial fallout.

Read the instructions before using cleaning products.

WAXING YOUR VEHICLE

Wax the high-gloss painted surface of your prewashed vehicle once or twice a year.

We recommend that you only use an approved quality wax that does not contain abrasives. Follow the manufacturer's instructions to apply and remove the wax. For additional information and assistance, we recommend that you contact an authorized dealer.

When washing and waxing, park your vehicle in a shaded area out of direct sunlight.

Note: *Avoid waxing unpainted or low-gloss black colored parts, they discolor over time.*

PREPARING YOUR VEHICLE FOR STORAGE

If you plan on storing your vehicle for 30 days or more, the following maintenance recommendations makes sure your vehicle stays in good operating condition.

Under various conditions, long-term storage may lead to degraded engine performance or failure unless you use specific precautions to preserve your vehicle.

General

- Store all vehicles in a dry, ventilated place.
- If vehicles are stored outside, they require regular maintenance to protect against rust and weather damage.
- Make sure all linkages, cables, levers and pins under your vehicle are covered with grease to prevent rust.
- Move vehicles at least 7.5 m (25 ft) every 15 days to lubricate working parts and prevent corrosion.
- Fill the fuel tank with high-quality fuel until the first automatic shutoff of the fuel pump nozzle.

Engine

- Change the engine oil and filter prior to storage because used engine oil contains contaminants which may cause engine damage.
- Start the engine every 15 days for a minimum of 15 minutes. Run at fast idle with the climate controls set to defrost until the engine reaches normal operating temperature.
- With your foot on the brake, shift through all the gears while the engine is running.

Body

- Wash your vehicle thoroughly to remove dirt, grease, oil, tar or mud from exterior surfaces, rear wheel housings and the underside of front fenders.
- Periodically wash your vehicle if it is stored in exposed locations.
- Touch-up exposed or primed metal to prevent rust.
- Cover chrome and stainless steel parts with a thick coat of auto wax to prevent discoloration. Rewax as necessary when you wash your vehicle.
- Lubricate all hood, door and luggage compartment hinges and latches with a light grade oil.
- Cover interior trim to prevent fading.
- Keep all rubber parts free from oil and solvents.

12 Volt Battery

- When storing your vehicle for longer than 30 days the battery state of charge should be approximately 50%. Additionally, we recommend to disconnect the 12v battery to reduce system loads on the battery, or you can use a trickle charger for longer storage periods.
- Check and recharge as necessary. Keep connections clean.

Note: *It is necessary to reset memory features if you disconnect the battery cables.*

Ranger (TRA, TRB) Vehicles Built From: 01-11-2024, CG4010en enGBR, Edition date: 202407, DOM

Tires

- Maintain recommended air pressure.
- To minimize flat spots on the tires, inflate all four tires to the recommended cold pressures listed on the Safety Compliance Certification label or Tire Label affixed to your vehicle. When the vehicle is taken out of storage, reset the tire pressures as necessary to the recommended levels listed on the Safety Compliance Certification label or Tire Label affixed to your vehicle.

Note: *If you store your vehicle in a location with low ambient temperatures, follow the instructions for care of summer tires.*

Brakes

Make sure the brakes and parking brake fully release.

Note: *If you intend to park your vehicle for an extended period after cleaning, drive it for few minutes before parking. This reduces the risk of corrosion of the brake discs, brake pads and linings.*

REMOVING YOUR VEHICLE FROM STORAGE

When your vehicle is ready to come out of storage, do the following:

- We recommend that you change the engine oil before you use your vehicle again.
- Wash your vehicle to remove any dirt or grease film build-up on window surfaces.
- Check windshield wipers for any deterioration.
- Check the underhood for any foreign materials such as mice or squirrel nests.
- Check the exhaust for any foreign materials.
- Check tire pressures and set tire inflation per the Tire Label.
- Check brake pedal operation. Corroded brake rotors could cause brake noise. Drive your vehicle and gently apply and release the brakes repeatedly over a 10-minute drive to reduce the corrosion from the brakes.
- Check fluid levels (including coolant, oil and gas) to make sure there are no leaks, and fluids are at recommended levels.
- If you remove the battery, clean the battery cable ends and check for damage.

Contact an authorized dealer if you have any concerns or issues.

LOCATING THE TIRE LABEL

The tire label is on the driver side B-pillar or the edge of the driver door. It contains information on the recommended front and rear tire inflation pressures.

INFORMATION ON THE TIRE SIDEWALL

Information on P Type Tires

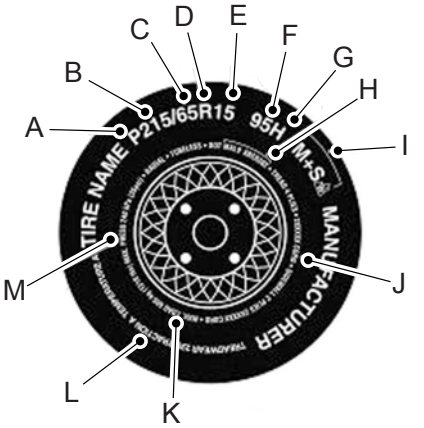

P215/65R15 95H is an example of a tire size, load index and speed rating. The definitions of these items are listed below. (Note that the tire size, load index and speed rating for your vehicle may be different from this example.)

A. **P:** Indicates a tire, designated by the Tire and Rim Association, that may be used for service on cars, sport utility vehicles, minivans and light trucks. **Note:** If your tire size does not begin with a letter this may mean it is designated by either the European Tire and Rim Technical Organization or the Japan Tire Manufacturing Association.

B. **215:** Indicates the nominal width of the tire in millimeters from sidewall edge to sidewall edge. In general, the larger the number, the wider the tire.

C. **65:** Indicates the aspect ratio which gives the tire's ratio of height to width.

D. **R:** Indicates a radial type tire.

E. **15:** Indicates the wheel or rim diameter in inches. If you change your wheel size, you will have to purchase new tires to match the new wheel diameter.

F. **95:** Indicates the tire's load index. It is an index that relates to how much weight a tire can carry. You may find this information in your owner's manual. If not, contact a local tire dealer.

Note: *You may not find this information on all tires because it is not required by federal law.*

G. **H:** Indicates the tire's speed rating. The speed rating denotes the speed at which a tire is designed to be driven for extended periods of time under a standard condition of load and inflation pressure. The tires on your vehicle may operate at different conditions for load and inflation pressure. These speed ratings may need to be adjusted for the difference in conditions. The ratings range from 130 km/h (81 mph) to 300 km/h (186 mph). These ratings are listed in the following chart.

Note: *You may not find this information on all tires because it is not required by federal law.*

Letter rating	Speed rating
M	130 km/h (81 mph)
N	140 km/h (87 mph)
Q	160 km/h (99 mph)
R	170 km/h (106 mph)
S	180 km/h (112 mph)
T	190 km/h (118 mph)
U	200 km/h (124 mph)
H	210 km/h (130 mph)
V	240 km/h (149 mph)
W	270 km/h (168 mph)
Y	300 km/h (186 mph)

Note: *For tires with a maximum speed capability over 149 mph (240 km/h), tire manufacturers sometimes use the letters ZR. For those with a maximum speed capability over 186 mph (299 km/h), tire manufacturers always use the letters ZR.*

H. **Tire Identification Number (TIN):** A code which identifies manufacturing location and other information about the tire. It may include the letters “DOT” and be referred to as a DOT code. The last four numbers represent the week and year the tire was built. For example, 2501 means the 25th week of 2001. The letters and numbers in between are identification codes used for traceability. This information is used to contact customers if a tire defect requires a recall.

I. **M+S or M/S:** Mud and Snow, or

AT: All Terrain, or

AS: All Season.

J. **Tire Ply Composition and Material Used:** Indicates the number of plies or the number of layers of rubber-coated fabric in the tire tread and sidewall. Tire manufacturers also must indicate the ply materials in the tire and the sidewall, which include steel, nylon, polyester, and others.

K. **Maximum Load:** Indicates the maximum load in kilograms and pounds that can be carried by the tire. See the Tire Label (affixed to either the door hinge pillar, door-latch post, or the door edge that meets the door-latch post, next to the driver's seating position), for the correct tire pressure for your vehicle.

L. **Treadwear, Traction and Temperature Grades:**

***Treadwear** The treadwear grade is a comparative rating based on the wear rate of the tire when tested under controlled conditions on a specified government test course. For example, a tire graded 150 would wear one and one-half times as well on the government course as a tire graded 100.

***Traction:** The traction grades, from highest to lowest are AA, A, B, and C. The grades represent the tire's ability to stop on wet pavement as measured under controlled conditions on specified government test surfaces of asphalt and concrete. A tire marked C may have poor traction performance.

***Temperature:** The temperature grades are A (the highest), B and C, representing the tire's resistance to the generation of heat and its ability to dissipate heat when tested under controlled conditions on a specified indoor laboratory test wheel.

M. **Maximum Inflation Pressure:** Indicates the tire manufacturers' maximum permissible pressure or the pressure at which the maximum load can be carried by the tire. This pressure is normally higher than the vehicle manufacturer's

recommended cold inflation pressure which can be found on the Tire Label (affixed to either the door hinge pillar, door-latch post, or the door edge that meets the door-latch post, next to the driver's seating position). The cold inflation pressure should never be set lower than the recommended pressure on the vehicle label.

The tire suppliers may have additional markings, notes or warnings such as standard load or radial tubeless.

Additional Information Contained on the Tire Sidewall for LT Type Tires

Note: *Tire Quality Grades do not apply to this type of tire.*

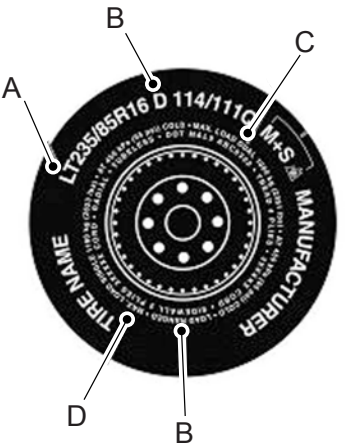

LT type tires have some additional information beyond those of P type tires; these differences are described below.

A. **LT:** Indicates a tire, designated by the Tire and Rim Association, that is intended for service on light trucks.

B. **Load Range and Load Inflation Limits:** Indicates the tire's load-carrying capabilities and its inflation limits.

C. **Maximum Load Dual lb (kg) at psi (kPa) cold:** Indicates the maximum load and tire pressure when the tire is used as a dual, defined as four tires on the rear axle (a total of six or more tires on the vehicle).

D. **Maximum Load Single lb (kg) at psi (kPa) cold:** Indicates the maximum load and tire pressure when the tire is used as a single, defined as two tires (total) on the rear axle.

Information on T Type Tires

T145/80D16 is an example of a tire size.

Note: *The temporary tire size for your vehicle may be different from this example. Tire Quality Grades do not apply to this type of tire.*

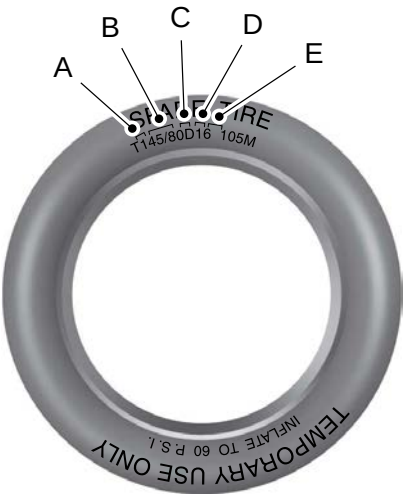

T type tires have some additional information beyond those of P type tires; these differences are described below:

A. **T:** Indicates a type of tire, designated by the Tire and Rim Association, that is intended for temporary service on cars, sport utility vehicles, minivans and light trucks.

B. **145:** Indicates the nominal width of the tire in millimeters from sidewall edge to sidewall edge. In general, the larger the number, the wider the tire.

C. **80:** Indicates the aspect ratio which gives the tire's ratio of height to width. Numbers of 70 or lower indicate a short sidewall.

D. **D:** Indicates a diagonal type tire.

R: Indicates a radial type tire.

E. **16:** Indicates the wheel or rim diameter in inches. If you change your wheel size, you will have to purchase new tires to match the new wheel diameter.

GLOSSARY OF TIRE TERMINOLOGY

*__Tire label:__ A label showing the original equipment tire sizes, recommended inflation pressure and the maximum weight the vehicle can carry.

*__Tire Identification Number (TIN):__ A number on the sidewall of each tire providing information about the tire brand and manufacturing plant, tire size and date of manufacture. Also referred to as DOT code.

*__Inflation pressure:__ A measure of the amount of air in a tire.

*__Standard load:__ A class of P-metric or Metric tires designed to carry a maximum load at set pressure. For example: For P-metric tires 2.4 bar (35 psi) and for Metric tires 2.5 bar (36 psi). Increasing the inflation pressure beyond this pressure will not increase the tire's load carrying capability.

*__Extra load:__ A class of P-metric or Metric tires designed to carry a heavier maximum load at 2.9 bar (42 psi). Increasing the inflation pressure beyond this pressure will not increase the tire's load carrying capability.

*__kPa:__ Kilopascal, a metric unit of air pressure.

*__PSI:__ Pounds per square inch, a standard unit of air pressure.

*__Cold tire pressure:__ The tire pressure when the vehicle has been stationary and out of direct sunlight for an hour or more and prior to the vehicle being driven for 1.6 km (1 mi).

***Recommended inflation pressure:** The cold inflation pressure found on the Tire Label (affixed to either the door hinge pillar, door-latch post, or the door edge that meets the door-latch post, next to the driver's seating position).

* **B-pillar:** The structural member at the side of the vehicle behind the front door.

***Bead area of the tire:** Area of the tire next to the rim.

* **Sidewall of the tire:** Area between the bead area and the tread.

***Tread area of the tire:** Area of the perimeter of the tire that contacts the road when mounted on the vehicle.

***Rim:** The metal support (wheel) for a tire or a tire and tube assembly upon which the tire beads are seated.

TIRE REPLACEMENT REQUIREMENTS

Your vehicle is equipped with tires designed to provide a safe ride and handling capability.

WARNING: Only use replacement tires and wheels that are the same size, as those originally provided for your vehicle. The required tire and wheel sizes, along with the minimum required Load and Speed Index, can be found on the Tire Label on the driver side door frame or the edge of the driver door. If this information is not found in those locations, or for additional options, contact your authorized dealer. Use of any tire or wheel not recommended, could affect the safety and performance of your vehicle, which could result in an increased risk of loss of vehicle control, vehicle rollover, personal injury and death.

WARNING: To reduce the risk of serious injury, when mounting replacement tires and wheels, you should not exceed the maximum pressure indicated on the sidewall of the tire to set the beads without additional precautions listed below. If the beads do not seat at the maximum pressure indicated, re-lubricate and try again.

WARNING: For a mounting pressure more than 1.38 bar (20 psi) greater than the maximum pressure, a Ford dealer or other tire service professional should do the mounting.

WARNING: Always inflate steel carcass tires with a remote air fill with the person inflating standing at a minimum of 3.66 m (12 ft) away from the wheel and tire assembly.

WARNING: Only use the specified jacking points. If you use any other locations you could damage vehicle components, such as brake lines.

WARNING: When inflating the tire for mounting pressures up to 1.38 bar (20 psi) greater than the maximum pressure on the tire sidewall, the following precautions must be taken to protect the person mounting the tire:

- Make sure that you have the correct tire and wheel size.
- Lubricate the tire bead and wheel bead seat area again.
- Stand at a minimum of 3.66 m (12 ft) away from the wheel and tire assembly.
- Use both eye and ear protection.

Important: Remember to replace the wheel valve stems when the road tires are replaced on your vehicle.

Ranger (TRA, TRB) Vehicles Built From: 01-11-2024, CG4010en enGBR, Edition date: 202407, DOM

It is recommended that the two front tires or two rear tires generally be replaced as a pair if the worn tires still have usable depth.

To avoid potential All-Wheel Drive (AWD) malfunction or (AWD) system damage, it is recommended to replace all four tires rather than mixing significantly worn tires with new tires.

The tire pressure sensors mounted in the wheels (originally installed on your vehicle) are not designed to be used in aftermarket wheels.

The use of wheels or tires not recommended may affect the operation of your tire pressure monitoring system.

If the tire pressure monitoring system indicator is flashing, your system is malfunctioning. Your replacement tire might be incompatible with your tire pressure monitoring system, or some component of the system may be damaged.

Age

WARNING: Tires degrade over time depending on many factors such as weather, storage conditions, and conditions of use (load, speed, inflation pressure) the tires experience throughout their lives.
In general, tires should be replaced after six years regardless of tread wear. However, heat caused by hot climates or frequent high loading conditions can accelerate the aging process and may require tires to be replaced more frequently.
You should replace your spare tire when you replace the road tires or after six years due to aging even if it has not been used.

USING SNOW CHAINS

WARNING: Do not exceed 50 km/h (30 mph). Failure to follow this instruction could result in the loss of control of your vehicle, personal injury or death.

WARNING: Do not use snow chains on snow-free roads.

WARNING: Only fit snow chains to specified tires.

WARNING: If your vehicle is fitted with wheel trims, remove them before fitting snow chains.

WARNING: If you choose to install snow tires on your vehicle, they must be the same size, construction, and load range as the original tires listed on the tire placard, and they must be installed on all four wheels. Mixing tires of different size or construction on your vehicle can adversely affect your vehicle's handling and braking, and may lead to loss of vehicle control.

WARNING: Wheels and tires must be the same size, load index and speed rating as those originally fitted on the vehicle. Use of any other tire or wheel can affect the safety and performance of your vehicle. Additionally, the use of non-recommended tires and wheels can cause steering, suspension, axle, transfer case or power transfer unit failure. Follow the recommended tire inflation pressures found on the Safety Compliance Certification label, or the Tire Label on the B-Pillar or the edge of the driver door. Failure to follow this instruction could result in loss of vehicle control, vehicle rollover, or personal injury or death.

Only use snow chains on rear wheels. Install snow chains in pairs. Do not use self-tensioning snow chains.

Only use snow chains on tires sizes listed in the tire label/compliance certificate label. Only use S-class snow chains, 15mm chain links.

We recommend you use steel wheels of the same size and specification if snow chains are required because chains may chip aluminum wheels.

Follow these guidelines when using snow tires and traction devices:

- If possible, avoid fully loading your vehicle.
- Purchase snow chains from a manufacturer that clearly labels body to tire dimension restrictions.
- When driving with snow chains do not exceed 50 km/h (30 mph) or the maximum speed recommended by the chain manufacturer, whichever is less.
- Drive cautiously. If you hear the snow chains rub or bang against the vehicle, stop and tighten them. If this does not work, remove the snow chains to prevent vehicle damage.
- Remove the snow chains when they are no longer needed. Do not use snow chains on dry roads.
- If a temporary spare wheel is mounted on your vehicle, do not use snow chains on the axle with the temporary spare wheel.

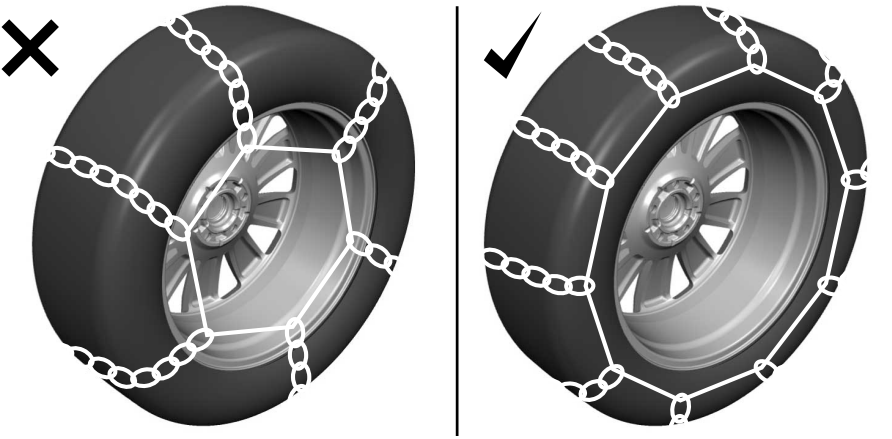

Use snow chains that fit against the sidewall of the tire to prevent the chains from touching the wheel rims or suspension. Refer to the previous illustration.

If you have any questions regarding snow chains, contact your authorized dealer.

CHECKING THE TIRE PRESSURES

Safe operation of your vehicle requires that your tires are properly inflated. Check your tire pressure everyday before driving your vehicle.

At least once a month and before long trips, inspect each tire and check the tire pressure with a tire gauge. Inflate all tires to the recommended inflation pressure. See **Inflating the Tires** (page 524).

INFLATING THE TIRES

WARNING: Under-inflation is the most common cause of tire failures and may result in severe tire cracking, tread separation or blowout, with unexpected loss of vehicle control and increased risk of injury. Under-inflation increases sidewall flexing and rolling resistance, resulting in heat buildup and internal damage to the tire. It also may result in unnecessary tire stress, irregular wear, loss of vehicle control and accidents. A tire can lose up to half of its air pressure and not appear to be flat!

WARNING: Do not use the tire pressure displayed in the information display as a tire pressure gauge. Failure to follow this instruction could result in personal injury or death.

Use the recommended cold inflation pressure for optimum tire performance and wear. Under-inflation or over-inflation may cause uneven tread wear patterns.

Inflate your tires to the recommended inflation pressure even if it is less than the maximum inflation pressure information found on the tire. You can find the tire label with the recommended tire inflation pressure next to the tire size on the B-pillar or the edge of the driver door.

The recommended tire inflation pressure is also found on the Safety Compliance Certification Label, affixed to either the door hinge pillar, door latch post, or the door edge that meets the door latch on the B-pillar, or on the edge of the driver door.

Failure to follow the tire pressure recommendations can cause uneven tread wear patterns and adversely affect the way your vehicle handles.

When temperature changes occur, tire inflation pressures also change. A 6ºC or 10ºF temperature drop can cause a corresponding drop of 7 kPa (1.0 psi) in inflation pressure. Check your tire pressure frequently and adjust them to the proper pressure which can be found on the Safety Compliance Certification Label or Tire Label.

TIRE PRESSURE SPECIFICATIONS - EXCLUDING: RAPTOR

WARNING: Only use replacement tires and wheels that are the same size, load index, speed rating, and type as those originally provided for your vehicle. The recommended tire and wheel sizes can be found on the Tire Label on the driver side door frame or the edge of the driver door. If this information is not found in those locations, or for additional options, contact your authorized dealer.

Ranger (TRA, TRB) Vehicles Built From: 01-11-2024, CG4010en enGBR, Edition date: 202407, DOM

Use of any tire or wheel not recommended, could affect the safety and performance of your vehicle, which could result in an increased risk of loss of vehicle control, vehicle rollover, personal injury and death.

The recommended tire inflation pressures are located on the tire information label on the driver side B-pillar.

Check all tire pressures, including the spare, when they are cold, at least once every two weeks.

Note: *Remove the spare wheel from the spare wheel well to check the tire pressure.*

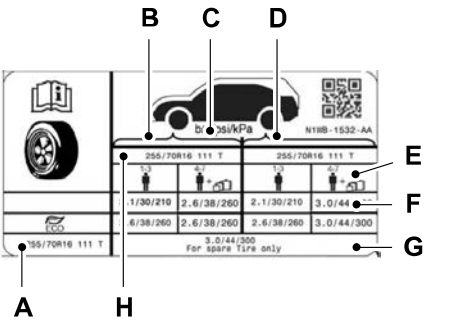

A Spare wheel tire size.
B Front tire pressure.
C Measure unit.
D Rear tire pressure.
E Vehicle load.
F Tire pressure.
G Spare wheel tire pressure.
H Tire size.

Tire Size	Normal Load		Eco		Full Load	Full Load
	Front	Rear	Front	Rear	Front	Rear
	bar (psi)	bar (psi)	bar (psi)	bar (psi)	bar (psi)	bar (psi)
215/70R16 C 108/106 T	2.4 (35)	2.4 (35)	2.6 (38)	2.6 (38)	2.6 (38)	3.7 (54)
255/70R16 111 T	2.1 (30)	2.1 (30)	2.6 (38)	2.6 (38)	2.6 (38)	3 (44)
255/70R17 112 T	2.1 (30)	2.1 (30)	2.6 (38)	2.6 (38)	2.6 (38)	3 (44)
LT265/70R17 112/109T	2.1 (30)	2.1 (30)	2.6 (38)	2.6 (38)	2.6 (38)	3 (44)

Tire Size	Normal Load		Eco		Full Load	Full Load
	Front	Rear	Front	Rear	Front	Rear
	bar (psi)	bar (psi)	bar (psi)	bar (psi)	bar (psi)	bar (psi)
255/65R18 111 T	2.1 (30)	2.1 (30)	2.6 (38)	2.6 (38)	2.6 (38)	3 (44)
255/65R18 111 H	2.1 (30)	2.1 (30)	2.6 (38)	2.6 (38)	2.6 (38)	3 (44)
255/55R20 110 V	2.4 (35)	2.4 (35)	2.6 (38)	2.6 (38)	2.6 (38)	3 (44)
255/65R17 114 H	2.4 (35)	2.4 (35)	2.6 (38)	2.6 (38)	2.6 (38)	3.5 (51)
255/65R18 115 H	2.1 (30)	2.1 (30)	2.6 (38)	2.6 (38)	2.6 (38)	3.5 (51)

Note: *See the tire information label for applicable tire pressure and size.*

Eco tire pressures are recommended for optimal fuel consumption.

Snow chains can be fitted on all of the above sizes on the rear axle only.

TIRE PRESSURE SPECIFICATIONS - RAPTOR

WARNING: Only use replacement tires and wheels that are the same size, load index, speed rating, and type as those originally provided for your vehicle. The recommended tire and wheel sizes can be found on the Tire Label on the driver side door frame or the edge of the driver door. If this information is not found in those locations, or for additional options, contact your authorized dealer. Use of any tire or wheel not recommended, could affect the safety and performance of your vehicle, which could result in an increased risk of loss of vehicle control, vehicle rollover, personal injury and death.

The recommended tire inflation pressures are located on the tire information label on the driver side B-pillar.

Check all tire pressures, including the spare, when they are cold, at least once every two weeks.

Note: *Remove the spare wheel from the spare wheel well to check the tire pressure.*

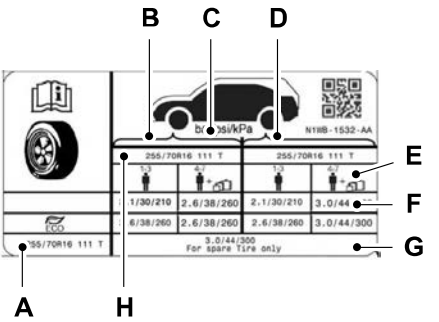

A Spare wheel tire size.
B Front tire pressure.
C Measure unit.
D Rear tire pressure.
E Vehicle load.
F Tire pressure.
G Spare wheel tire pressure.
H Tire size.

Tire Size	Normal Load		Eco		Full Load	Full Load
	Front	Rear	Front	Rear	Front	Rear
	bar (psi)	bar (psi)	bar (psi)	bar (psi)	bar (psi)	bar (psi)
LT285/70R17 116/113S	2.5 (36)	2.5 (36)			2.5 (36)	2.8 (41)

Note: *See the tire information label for applicable tire pressure and size.*

Eco tire pressures are recommended for optimal fuel consumption.

Snow chains can be fitted on all of the above sizes on the rear axle only.

INSPECTING THE TIRE FOR WEAR

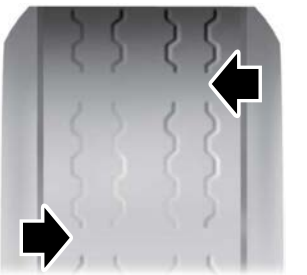

When the tread is worn down to 2/32 inch (1.6 mm), tires must be replaced to help prevent your vehicle from skidding and hydroplaning. Built-in treadwear indicators, or wear bars, which look like narrow strips of smooth rubber across the tread will appear on the tire when the tread is worn down to 2/32 inch (1.6 mm).

When the tire tread wears down to the same height as these wear bars, the tire is worn out and must be replaced.

The tires should also be balanced periodically. An unbalanced tire and wheel assembly may result in irregular tire wear.

Periodically inspect the tire treads for uneven or excessive wear and remove objects such as stones, nails or glass that may be wedged in the tread grooves.

INSPECTING THE TIRE FOR DAMAGE

WARNING: Do not scrub the sidewalls of the tires when you are parking.

Inspect the tire sidewalls for cracking, cuts, bruises and other signs of damage or excessive wear. If internal damage to the tire is suspected, have the tire dismounted and inspected in case it needs to be repaired or replaced. For your safety, tires that are damaged or show signs of excessive wear should not be used because they are more likely to blow out or fail.

Periodically inspect the tire treads and sidewalls for damage, such as bulges in the tread or sidewalls, cracks in the tread groove and separation in the tread or sidewall. If damage is observed or suspected, have the tire inspected by a tire professional.

Damage

Periodically inspect the tire treads and sidewalls for damage such as bulges in the tread or sidewalls, cracks in the tread groove and separation in the tread or sidewall. If damage is observed or suspected have the tire inspected by a tire professional. Tires can be damaged during off-road use, so inspection after off-road use is also recommended.

Age

WARNING: Tires degrade over time depending on many factors such as weather, storage conditions, and conditions of use (load, speed, inflation pressure) the tires experience throughout their lives.

WARNING: In general, tires should be replaced after six years regardless of tread wear. However, heat caused by hot climates or frequent high loading conditions can accelerate the aging process and may require tires to be replaced more frequently.

WARNING: You should replace your spare tire when you replace the road tires or after six years due to aging even if it has not been used.

Safety Practices

WARNING: If your vehicle is stuck in snow, mud or sand, do not rapidly spin the tires; spinning the tires can tear the tire and cause an explosion. A tire can explode in as little as three to five seconds.

Ranger (TRA, TRB) Vehicles Built From: 01-11-2024, CG4010en enGBR, Edition date: 202407, DOM

WARNING: Do not spin the wheels at over 55 km/h (34 mph). The tires may fail and injure a passenger or bystander.

Highway Hazards

No matter how carefully you drive, there is always the possibility that you could eventually have a flat tire on the highway. Drive slowly to the closest safe area out of traffic. This could further damage the flat tire, but your safety is more important.

If you feel a sudden vibration or ride disturbance while driving, or you suspect your tire or vehicle has been damaged, immediately reduce your speed. Drive with caution until you can safely pull off the road. Stop and inspect the tires for damage. If a tire is under-inflated or damaged, deflate it, remove the wheel and replace it with your spare tire and wheel. If you cannot detect a cause, have the vehicle towed to the nearest repair facility or tire dealer to have the vehicle inspected.

Tire and Wheel Alignment

A bad jolt from hitting a curb or pothole can cause the front end of your vehicle to become misaligned or cause damage to your tires. If your vehicle seems to pull to one side when you are driving, the wheels could be out of alignment. Have an authorized dealer check the wheel alignment periodically.

Wheel misalignment in the front or the rear can cause uneven and rapid tread wear of your tires and should be corrected by an authorized dealer.

INSPECTING THE WHEEL VALVE STEMS

Check the valve stems for holes, cracks, or cuts that could permit air leakage.

TIRE ROTATION

WARNING: If the tire label shows different tire pressures for the front and rear tires and the vehicle has a tire pressure monitoring system, then you need to update the settings for the system sensors. Always perform the system reset procedure after tire rotation. If you do not reset the system, it may not provide a low tire pressure warning when necessary.

Rotating your tires at the recommended interval will help your tires wear more evenly, providing better tire performance and longer tire life.

Note: *If your tires show any uneven wear have the alignment checked by an authorized dealer before rotating tires.*

Note: *If you have a dissimilar spare wheel and tire assembly, it is intended for temporary use only and should not be used in a tire rotation.*

Note: *After having your tires rotated, inflation pressure must be checked and adjusted to the vehicle requirements.*

Tire Rotation Diagram

Follow the diagram indicating the correct tire locations for rotating the tires.

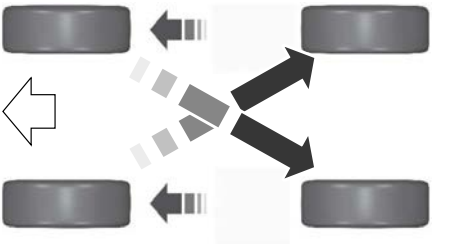

Ranger (TRA, TRB) Vehicles Built From: 01-11-2024, CG4010en enGBR, Edition date: 202407, DOM

WHAT IS THE TIRE PRESSURE MONITORING SYSTEM

The tire pressure monitoring system measures the vehicle's tire pressures. A warning lamp illuminates if one or more tires are significantly underinflated or if there is a system malfunction.

TIRE PRESSURE MONITORING SYSTEM PRECAUTIONS

WARNING: The tire pressure monitoring system is not a substitute for manually checking tire pressures. You should periodically check tire pressures using a pressure gauge. Failure to correctly maintain tire pressures could increase the risk of tire failure, loss of control, vehicle rollover and personal injury.

WARNING: Do not use the tire pressure displayed in the information display as a tire pressure gauge. Failure to follow this instruction could result in personal injury or death.

Note: *The use of tire sealants can damage the tire pressure monitoring system.*

Note: *If the tire pressure monitor sensor becomes damaged it may not function.*

TIRE PRESSURE MONITORING SYSTEM LIMITATIONS

When the outside temperature drops significantly, the tire pressure could decrease and activate the low tire pressure warning lamp.

The warning lamp could also illuminate when you use a spare wheel, or tire sealant from the inflator kit.

Note: *Regularly checking the vehicle tire pressures can reduce the possibility for the warning lamp to illuminate due to outside air temperature changes.*

Note: *After you inflate the tires to the recommended pressure it could take up to two minutes of driving over 32 km/h (20 mph) for the warning indicator to turn off.*

VIEWING THE TIRE PRESSURES - VEHICLES WITH: 8 INCH SCREEN

To view the current tire pressures, use the information display or touchscreen.

VIEWING THE TIRE PRESSURES - VEHICLES WITH: 12 INCH SCREEN

To view the current tire pressures, use the information display or touchscreen.

RESETTING TIRE PRESSURE MONITORING SYSTEM

You must carry out the system reset procedure after each tire replacement or adjustment of the tire pressures.

To maintain your vehicle load carrying capability, your vehicle may require different tire pressures in the front compared to the rear. In these cases, the system illuminates the warning lamp at different pressures for the front and rear tires.

If the tires are rotated, you need to reset the system in order to relearn the positions of the tire pressure sensors. The system cannot tell which position a tire pressure sensor is in, and assumes you have set the tire pressures correctly.

Performing the Reset Procedure

1. Switch the ignition on.
2. Navigate to the tire monitor menu in the information display. See **Tire Pressure Monitoring System – Information Messages** (page 533).
3. Press and hold the OK button until a confirmation message appears. If your vehicle has a tire pressure monitoring system reset button, press and hold the button until a confirmation message appears.

TIRE PRESSURE MONITORING SYSTEM – TROUBLESHOOTING

TIRE PRESSURE MONITORING SYSTEM – WARNING LAMPS

The low tire pressure warning lamp has combined functions, as it warns you when your tires need air, and when the system is no longer capable of functioning as intended.

Ranger (TRA, TRB) Vehicles Built From: 01-11-2024, CG4010en enGBR, Edition date: 202407, DOM

Warning Lamp	Possible Cause	Action Required
Solid warning lamp	One or more tires are significantly under inflated	After inflating your tires to the manufacturer's recommended pressure as shown on the tire label, on the edge of driver door or the B-pillar, drive your vehicle for at least two minutes over 32 km/h (20 mph) before the light turns off.
Solid warning lamp or flashing warning lamp	Temporary spare wheel in use	Repair the damaged road wheel and tire and refit it to your vehicle to restore operation of the system.
	Tire pressure monitoring system malfunction	If the tires are inflated to the recommended tire pressures and the temporary spare wheel is not in use, the system detected a fault that requires service. Have your vehicle checked as soon as possible.

TIRE PRESSURE MONITORING SYSTEM – INFORMATION MESSAGES

Message	Action
Tyre pressure low	After inflating your tires to the manufacturer's recommended pressure as shown on the tire label, on the edge of the driver door or the B-pillar, drive your vehicle for at least two minutes over 32 km/h (20 mph) before the light turns off.
Tyre pressure monitor malfunction	The system has detected a fault that requires service. Have your vehicle checked as soon as possible.
Tyre pressure sensor malfunction	The system has detected a fault that requires service or a spare tire is in use. Have your vehicle checked as soon as possible.

Ranger (TRA, TRB) Vehicles Built From: 01-11-2024, CG4010en enGBR, Edition date: 202407, DOM

CHANGING A FLAT TIRE - EXCLUDING: RAPTOR

If you get a flat tire when driving, do not apply the brake heavily. Instead, gradually decrease your speed, hold the steering wheel firmly and slowly move to a safe place on the side of the road.

Have the flat serviced by an authorized dealer to prevent damage to the system sensors. See **Tire Pressure Monitoring System Precautions** (page 530). Replace the spare tire with a road tire as soon as possible. During repairing or replacing the flat tire, have the authorized dealer inspect the system sensor for damage.

Note: *The use of tire sealant could damage your tire pressure monitoring system and should only be used in roadside emergencies.*

Note: *The tire pressure monitoring system indicator light illuminates when the spare tire is in use. To restore the full function of the monitoring system, all road wheels equipped with tire pressure monitoring sensors must be mounted on this vehicle.*

Dissimilar Spare Wheel and Tire Assembly Information

WARNING: Failure to follow these guidelines could result in an increased risk of loss of vehicle control, injury or death.

WARNING: If you are not sure what type of spare wheel your vehicle has, do not exceed 80 km/h (50 mph).

If the spare wheel is different from the other fitted road wheels, it may have a warning label with the appropriate maximum speed limit. Drive cautiously when using a dissimilar spare wheel and tire assembly.

Full-size Dissimilar Spare Wheel With a Label on the Wheel

The label on the wheel states: THIS WHEEL AND TIRE ASSEMBLY FOR TEMPORARY USE ONLY.

A dissimilar spare wheel and tire is for temporary use only. Drive the shortest distance possible and have the damaged road wheel and tire repaired or replaced as soon as possible. If the dissimilar spare wheel or tire is damaged, it must be replaced.

If you use a dissimilar spare wheel and tire assembly, this can lead to impairment of the following:

- Handling, stability and braking performance.
- Comfort and noise.
- Ground clearance and parking at curbs.
- Winter weather driving capability.
- Wet weather driving capability.
- All wheel driving capability.

When driving with this type of a dissimilar spare wheel:

- Do not exceed the maximum speed as shown on the label.
- Do not load your vehicle beyond maximum vehicle load rating listed on the safety compliance label.
- Do not tow a trailer.
- Do not use snow chains on the end of your vehicle with the dissimilar spare.
- Do not use more than one dissimilar spare tire at a time.
- Do not use a commercial car wash.

Full-size Dissimilar Spare Wheel Without a Label on the Wheel

You can replace the existing road wheel with the spare and continue to drive in the normal manner.

Tire Change Procedure

WARNING: To help prevent your vehicle from moving when changing a wheel, shift the transmission into park (P), set the parking brake and use an appropriate block or wheel chock to secure the wheel diagonally opposite to the wheel being changed. For example, when changing the front left wheel, place an appropriate block or wheel chock on the right rear wheel.

WARNING: The jack supplied with this vehicle is only intended for changing a flat tire in an emergency. Do not attempt to do any other work on your vehicle when it is supported by the jack, as your vehicle could slip off the jack. Failure to follow this instruction could result in personal injury or death.

WARNING: Do not attempt to change a tire on the side of the vehicle close to moving traffic. Pull far enough off the road to not obstruct the flow of traffic and avoid the danger of being hit when operating the jack or changing the wheel.

WARNING: Only use the jack provided as original equipment with your vehicle.

WARNING: Do not get under a vehicle that is supported by a jack.

WARNING: No person should place any portion of their body under a vehicle that is supported by a jack.

WARNING: The jack supplied with this vehicle is only intended for changing a flat tire in an emergency. Do not attempt to do any other work on your vehicle when it is supported by the jack, as your vehicle could slip off the jack. Failure to follow this instruction could result in personal injury or death.

WARNING: Ensure screwthread is adequately lubricated before use.

WARNING: The jack should be used on level firm ground wherever possible.

WARNING: Never place anything between the vehicle jack and the ground.

WARNING: Never place anything between the vehicle jack and your vehicle.

WARNING: If your vehicle has a manual transmission, shift into first or reverse (R) gear, apply the parking brake, and switch the vehicle off.

WARNING: If your vehicle has an automatic transmission, shift into park (P), apply the parking brake, and switch the vehicle off.

WARNING: It is recommended that the wheels of the vehicle be chocked, and that no person should remain in a vehicle that is being jacked.

WARNING: Switch off the running boards before jacking or placing any object under your vehicle. Never place your hand between the extended running board and your vehicle. A moving running board may cause injury.

1. Park the vehicle on a level, firm surface and activate the hazard flashers.

Ranger (TRA, TRB) Vehicles Built From: 01-11-2024, CG4010en enGBR, Edition date: 202407, DOM

2. Apply parking brake, turn the engine off and set up a warning triangle.

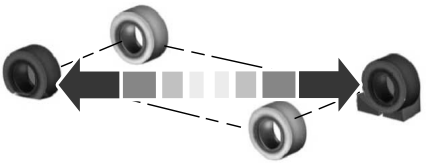

3. Block the wheel diagonally opposite the flat tire. For example, if the left front tire is flat, block the right rear wheel.

Note: *Passengers should not remain in the vehicle when the vehicle is being jacked.*

Removing the Vehicle Jack and Tool Bag

The jack, wheel brace and jack handle are located in the cab.

Note: *Not all cab configurations are available in all markets.*

Single Cab

1. Fold the left-hand side seatback forward.
2. Remove the locking strap and remove the tools.

1. Fold the right-hand side seatback forward.
2. Loosen the jack, remove the bolt and remove the jack.

Super Cab

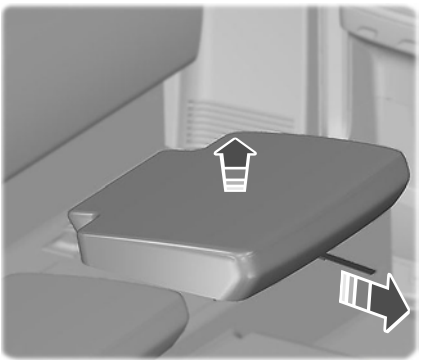

1. Pull the release strap.
2. Remove the rear seats.

3. Remove the cover.

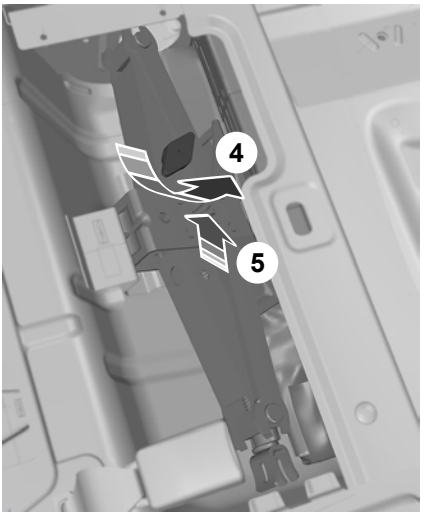

4. Remove the bolt and turn the lead screw on the end counterclockwise to unwind.
5. Remove the jack.
6. Remove the tools.

Double Cab

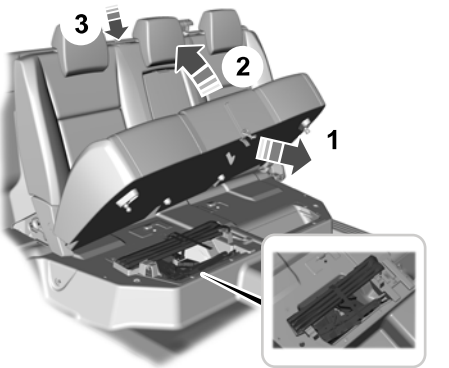

1. Pull the release strap out.
2. Lift the seat cushion up.
3. Use the tether strap to secure the seat cushion.
4. Remove the locking strap.
5. Remove the jack and tools

Removing the Spare Tire

WARNING: If you are not sure what type of spare wheel your vehicle has, do not exceed 80 km/h (50 mph).

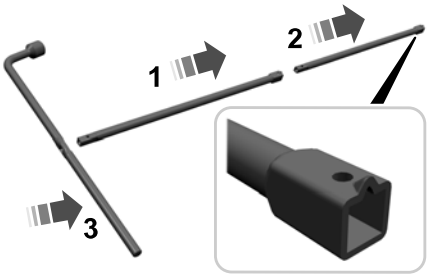

1. Assemble the handle.

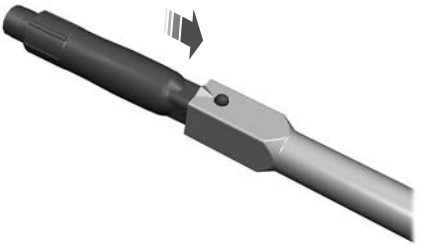

2. If there is a spare wheel lock on the vehicle, find the spare wheel lock key in the glove box and attach the key on the front end of the jack tool.

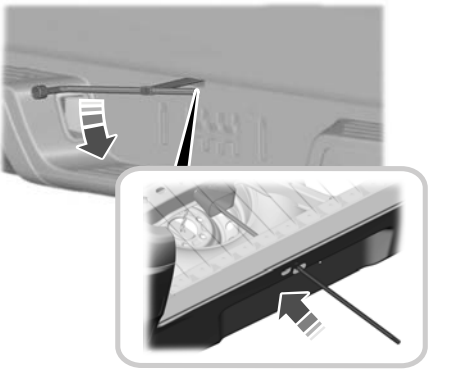

3. Insert the jack handle into the guide hole. Turn counterclockwise until the wheel rests on the ground, and there is slack in the cable.

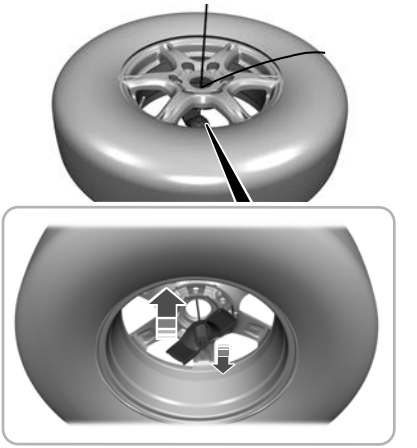

4. Pass the bracket and cable through the wheel opening.

5. If there is a winch cable guard on the vehicle, remove the winch cable guard by pulling off the entire metal plate with inserts clips, no need to remove the insert clips separately.

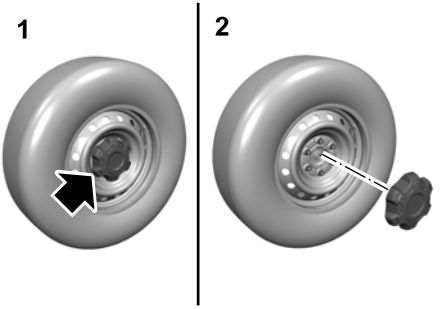

6. Vehicles with steel wheels, remove the center cap by pulling off or using an object to pry the cover off. Loosen each wheel lug nut one-half turn counterclockwise, but do not remove them until the wheel is raised off the ground.

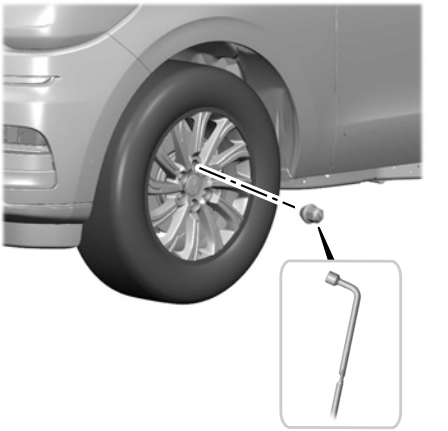

7. Vehicles with aluminum wheels, loosen each wheel lug nut one-half turn counterclockwise, but do not remove them until the wheel is raised off the ground.

Note: *If the spare wheel is not the same type and size as your vehicle road wheel, drive the shortest distance possible.*

Note: *Do not fit more than one spare wheel on your vehicle at any one time.*

Note: *Using a dissimilar spare wheel or tire at any one wheel location can compromise the handling, stability and braking performance, comfort and noise.*

Note: *When driving with a spare tire, do not switch on four-wheel drive mode unless you need to get your vehicle unstuck.*

Note: *The spare wheel is located underneath the rear of the vehicle.*

Note: *Do not use power tools on the spare wheel winch input drive.*

Removing a Road Wheel

WARNING: Only use the specified jacking points. If you use any other locations you could damage vehicle components, such as brake lines.

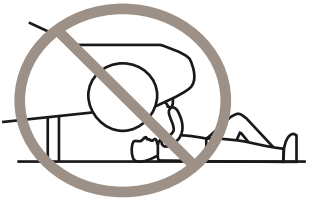

Note: *No maintenance or additional lubrication of your jack should be required over the service life of your vehicle.*

Note: *Jack at the specified locations to avoid damage to the vehicle.*

Note: *Only use the jack on the specified jacking points and as close to the affected wheel as possible.*

Front Jacking Points Without Fuel Filter

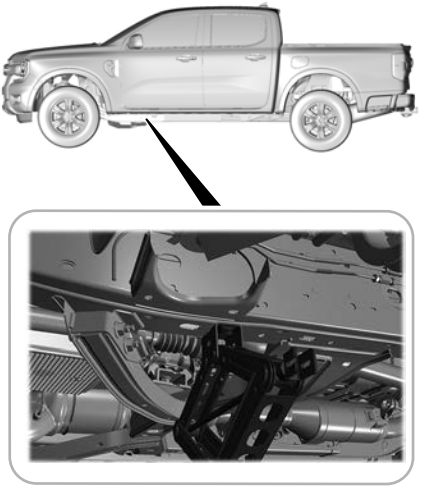

Front Jacking Points With Fuel Filter With High-Rider

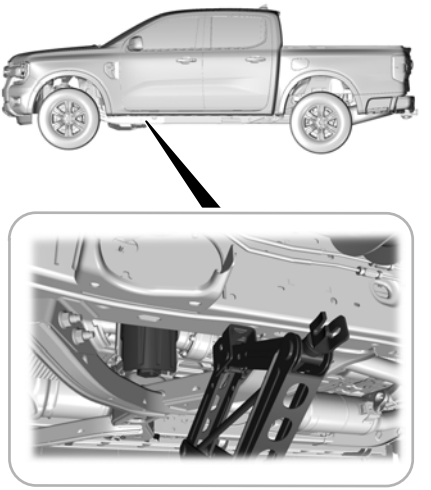

Front Jacking Points With Fuel Filter With Low-Rider

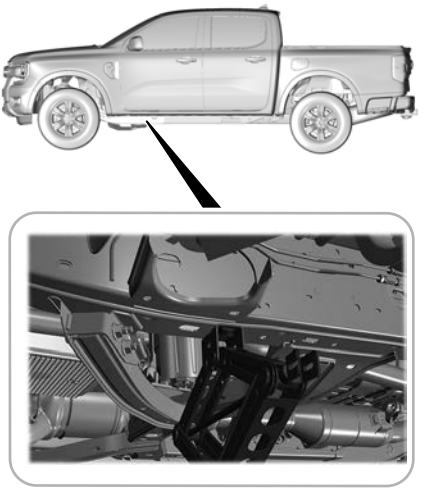

Rear Jacking Points

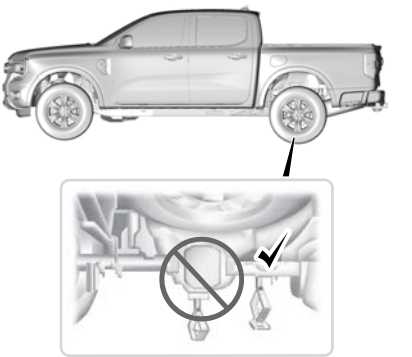

1. Place the vehicle jack at the jacking point next to the tire you are changing.

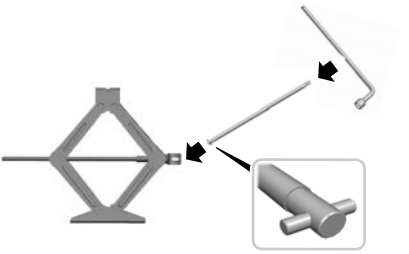

Note: *When you are changing the front flat tire, connect the jack handle to the jack. Operate the jack handle with the lug nut wrench.*

2. Assemble the jack handle, including the required extension tubes depending on the position you are jacking, and turn the jack handle clockwise until the wheel is completely off the ground.

Note: *When changing the rear flat tire, connect all the handles together to extend the jack handle.*

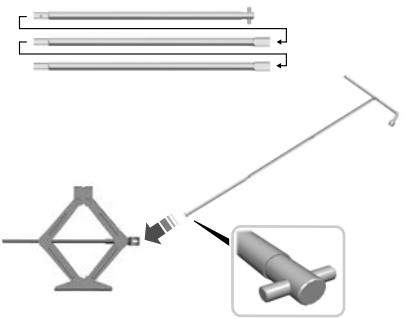

3. Raise your vehicle until the tire is clear of the ground.
4. Use the locking wheel nut key to loosen the locking wheel nut.
5. Remove the lug nuts and the road wheel.

Installing a Road Wheel

WARNING: Use only approved wheel and tire sizes. Using other sizes could damage your vehicle.

WARNING: Do not fit run flat tires on vehicles that were not originally fitted with them. See an authorized dealer for more details about compatibility.

WARNING: Make sure there is no grease or oil on the threads or the surface between the wheel studs and the wheel nuts. This can cause the wheel nuts to loosen while driving.

WARNING: Do not install alloy wheels using wheel nuts designed for use with steel wheels.

WARNING: Have the wheel nuts checked for tightness and the tire pressure checked as soon as possible.

Note: *Make sure the wheel and hub contact surfaces are free from foreign matter.*

Note: *Make sure the cones on the lug nuts are against the wheel.*

1. Install the wheel.
2. Install the lug nuts and finger tighten.
3. Install the locking lug nut key.

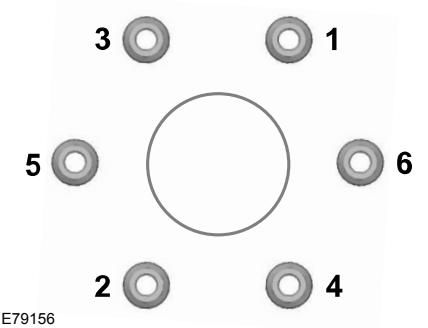

E79156

4. Lower your vehicle and remove the vehicle jack.
5. Fully tighten all of the lug nuts in the sequence shown. See **Wheel Nuts** (page 554).

Stowing the Flat or Spare Tire

1. If there is a winch cable guard on the vehicle, align the insert clips on the winch cable guard to the wheel nut holes, then push the metal plate until it's fully attached to the back side of the wheel.
2. Lay the tire on the ground, near the rear of the vehicle, with the valve stem side facing up.
3. Slide the wheel partially under the vehicle and install the retainer and tether through the wheel center. If equipped, you may have to remove the wheel center cap prior to pushing the retainer through the center of the wheel. To remove the center cap, press it off with the jack tool from the inner side of the wheel. Pull on the cable to align the components at the end of the cable.
4. Insert the handle into the guide hole and engage the winch.

Note: *If there is a spare wheel lock on the vehicle, find the spare wheel lock key in the glove box and attach the key on the front end of the jack tool.*

5. Turn the swivel wrench clockwise until the tire is raised to its stowed position underneath the vehicle. The wrench becomes harder to turn and the spare tire winch ratchets or slips when the tire is raised to its maximum tightness. A clicking sound is heard from the winch indicating the tire is properly stowed.

Note: *Ideally three clicks should be sufficient for spare wheel stowage.*

6. Carefully place all tools back to the tool kit bag.
7. Reinstall the tool kit bag in the original position.
8. Reinstall the jack properly on the bracket and secure the wing nut.
9. Unblock the wheel. Place the warning triangle back in the vehicle.

Note: *Do not use power tools on the spare wheel winch input drive.*

Note: *Only use the spare tire carrier to stow the tire and wheel combination provided with your vehicle. Other tire and wheel combinations can cause the tire carrier to fail.*

Ranger (TRA, TRB) Vehicles Built From: 01-11-2024, CG4010en enGBR, Edition date: 202407, DOM

CHANGING A FLAT TIRE - RAPTOR

If you get a flat tire when driving, do not apply the brake heavily. Instead, gradually decrease your speed, hold the steering wheel firmly and slowly move to a safe place on the side of the road.

Have the flat serviced by an authorized dealer to prevent damage to the system sensors. See **Tire Pressure Monitoring System Precautions** (page 530). Replace the spare tire with a road tire as soon as possible. During repairing or replacing the flat tire, have the authorized dealer inspect the system sensor for damage.

Note: *The use of tire sealant could damage your tire pressure monitoring system and should only be used in roadside emergencies.*

Note: *The tire pressure monitoring system indicator light illuminates when the spare tire is in use. To restore the full function of the monitoring system, all road wheels equipped with tire pressure monitoring sensors must be mounted on this vehicle.*

Dissimilar Spare Wheel and Tire Assembly Information

WARNING: Failure to follow these guidelines could result in an increased risk of loss of vehicle control, injury or death.

WARNING: If you are not sure what type of spare wheel your vehicle has, do not exceed 80 km/h (50 mph).

If the spare wheel is different from the other fitted road wheels, it may have a warning label with the appropriate maximum speed limit. Drive cautiously when using a dissimilar spare wheel and tire assembly.

Full-size Dissimilar Spare Wheel With a Label on the Wheel

The label on the wheel states: THIS WHEEL AND TIRE ASSEMBLY FOR TEMPORARY USE ONLY.

A dissimilar spare wheel and tire is for temporary use only. Drive the shortest distance possible and have the damaged road wheel and tire repaired or replaced as soon as possible. If the dissimilar spare wheel or tire is damaged, it must be replaced.

If you use a dissimilar spare wheel and tire assembly, this can lead to impairment of the following:

- Handling, stability and braking performance.
- Comfort and noise.
- Ground clearance and parking at curbs.
- Winter weather driving capability.
- Wet weather driving capability.
- All wheel driving capability.

When driving with this type of a dissimilar spare wheel:

- Do not exceed the maximum speed as shown on the label.
- Do not load your vehicle beyond maximum vehicle load rating listed on the safety compliance label.
- Do not tow a trailer.
- Do not use snow chains on the end of your vehicle with the dissimilar spare.
- Do not use more than one dissimilar spare tire at a time.
- Do not use a commercial car wash.

Full-size Dissimilar Spare Wheel Without a Label on the Wheel

You can replace the existing road wheel with the spare and continue to drive in the normal manner.

Ranger (TRA, TRB) Vehicles Built From: 01-11-2024, CG4010en enGBR, Edition date: 202407, DOM

Tire Change Procedure

WARNING: To help prevent your vehicle from moving when changing a wheel, shift the transmission into park (P), set the parking brake and use an appropriate block or wheel chock to secure the wheel diagonally opposite to the wheel being changed. For example, when changing the front left wheel, place an appropriate block or wheel chock on the right rear wheel.

WARNING: The jack supplied with this vehicle is only intended for changing a flat tire in an emergency. Do not attempt to do any other work on your vehicle when it is supported by the jack, as your vehicle could slip off the jack. Failure to follow this instruction could result in personal injury or death.

WARNING: Do not attempt to change a tire on the side of the vehicle close to moving traffic. Pull far enough off the road to not obstruct the flow of traffic and avoid the danger of being hit when operating the jack or changing the wheel.

WARNING: Only use the jack provided as original equipment with your vehicle.

WARNING: Do not get under a vehicle that is supported by a jack.

WARNING: No person should place any portion of their body under a vehicle that is supported by a jack.

WARNING: The jack supplied with this vehicle is only intended for changing a flat tire in an emergency. Do not attempt to do any other work on your vehicle when it is supported by the jack, as your vehicle could slip off the jack. Failure to follow this instruction could result in personal injury or death.

WARNING: Ensure screwthread is adequately lubricated before use.

WARNING: The jack should be used on level firm ground wherever possible.

WARNING: Never place anything between the vehicle jack and the ground.

WARNING: Never place anything between the vehicle jack and your vehicle.

WARNING: If your vehicle has a manual transmission, shift into first or reverse (R) gear, apply the parking brake, and switch the vehicle off.

WARNING: If your vehicle has an automatic transmission, shift into park (P), apply the parking brake, and switch the vehicle off.

WARNING: It is recommended that the wheels of the vehicle be chocked, and that no person should remain in a vehicle that is being jacked.

WARNING: Switch off the running boards before jacking or placing any object under your vehicle. Never place your hand between the extended running board and your vehicle. A moving running board may cause injury.

1. Park the vehicle on a level, firm surface and activate the hazard flashers.

Ranger (TRA, TRB) Vehicles Built From: 01-11-2024, CG4010en enGBR, Edition date: 202407, DOM

2. Apply parking brake, turn the engine off and set up a warning triangle.

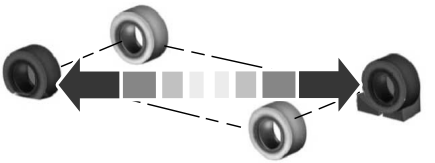

3. Block the wheel diagonally opposite the flat tire. For example, if the left front tire is flat, block the right rear wheel.

Note: *Passengers should not remain in the vehicle when the vehicle is being jacked.*

Removing the Vehicle Jack and Tool Bag

The jack, wheel brace and jack handle are located in the cab.

Note: *Not all cab configurations are available in all markets.*

Single Cab

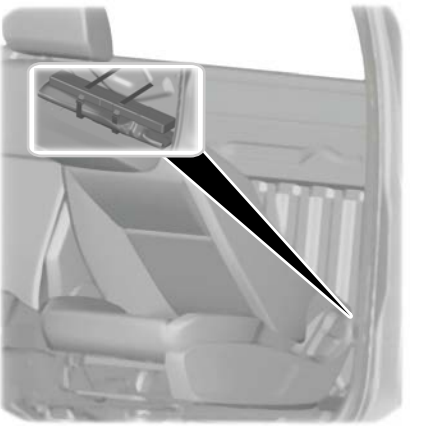

1. Fold the left-hand side seatback forward.
2. Remove the locking strap and remove the tools.

1. Fold the right-hand side seatback forward.
2. Loosen the jack, remove the bolt and remove the jack.

Super Cab

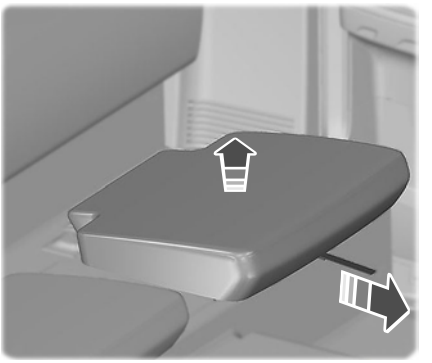

1. Pull the release strap.
2. Remove the rear seats.

3. Remove the cover.

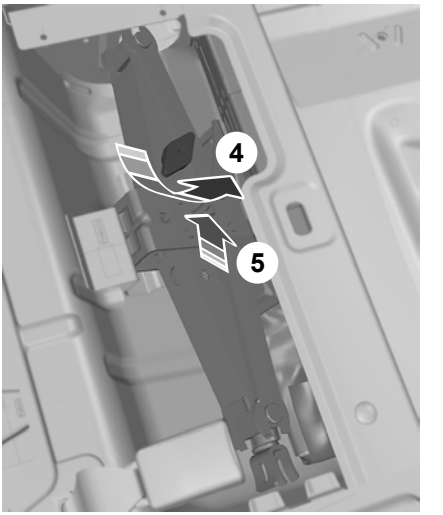

4. Remove the bolt and turn the lead screw on the end counterclockwise to unwind.
5. Remove the jack.
6. Remove the tools.

Double Cab

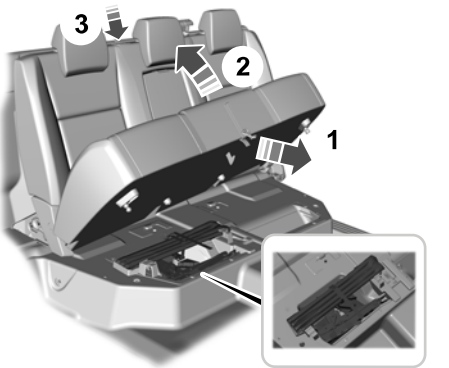

1. Pull the release strap out.
2. Lift the seat cushion up.
3. Use the tether strap to secure the seat cushion.
4. Remove the locking strap.
5. Remove the jack and tools

Removing the Spare Tire

WARNING: If you are not sure what type of spare wheel your vehicle has, do not exceed 80 km/h (50 mph).

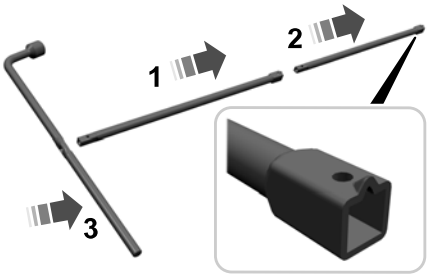

1. Assemble the handle.

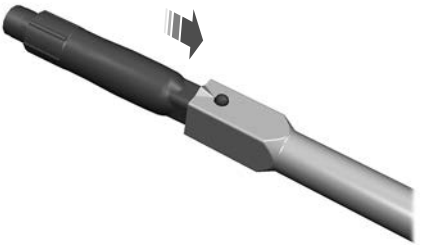

2. If there is a spare wheel lock on the vehicle, find the spare wheel lock key in the glove box and attach the key on the front end of the jack tool.

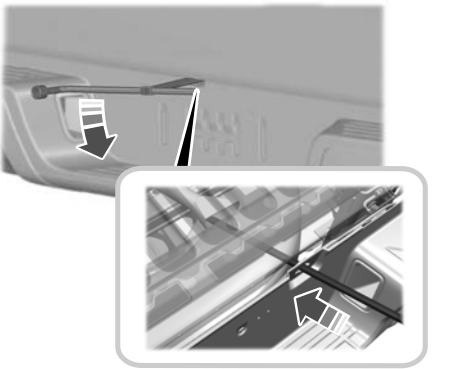

3. Insert the jack handle into the guide hole. Turn counterclockwise until the wheel rests on the ground, and there is slack in the cable.

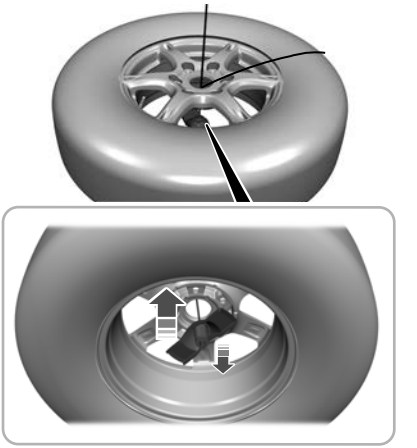

4. Pass the bracket and cable through the wheel opening.

5. If there is a winch cable guard on the vehicle, remove the winch cable guard by pulling off the entire metal plate with inserts clips, no need to remove the insert clips separately.

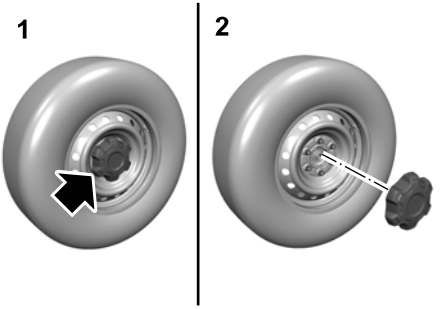

6. Vehicles with steel wheels, remove the center cap by pulling off or using an object to pry the cover off. Loosen each wheel lug nut one-half turn counterclockwise, but do not remove them until the wheel is raised off the ground.

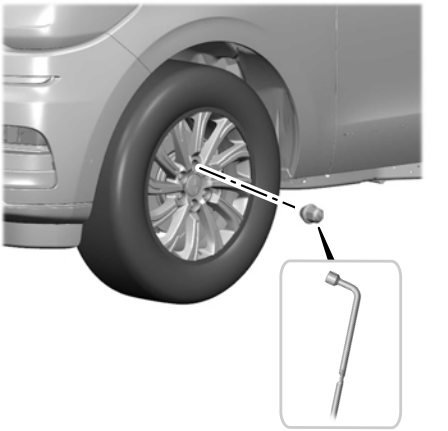

7. Vehicles with aluminum wheels, loosen each wheel lug nut one-half turn counterclockwise, but do not remove them until the wheel is raised off the ground.

Note: *If the spare wheel is not the same type and size as your vehicle road wheel, drive the shortest distance possible.*

Note: *Do not fit more than one spare wheel on your vehicle at any one time.*

Note: *Using a dissimilar spare wheel or tire at any one wheel location can compromise the handling, stability and braking performance, comfort and noise.*

Note: *When driving with a spare tire, do not switch on four-wheel drive mode unless you need to get your vehicle unstuck.*

Note: *The spare wheel is located underneath the rear of the vehicle.*

Note: *Do not use power tools on the spare wheel winch input drive.*

Removing a Road Wheel

WARNING: Only use the specified jacking points. If you use any other locations you could damage vehicle components, such as brake lines.

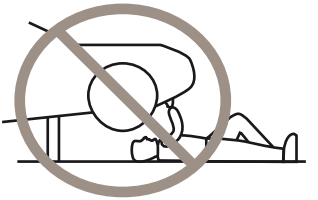

Note: *No maintenance or additional lubrication of your jack is required over the service life of your vehicle.*

Note: *Jack at the specified locations to avoid damage to the vehicle.*

Note: *Only use the jack on the specified jacking points and as close to the affected wheel as possible.*

Front Jacking Points Without Fuel Filter

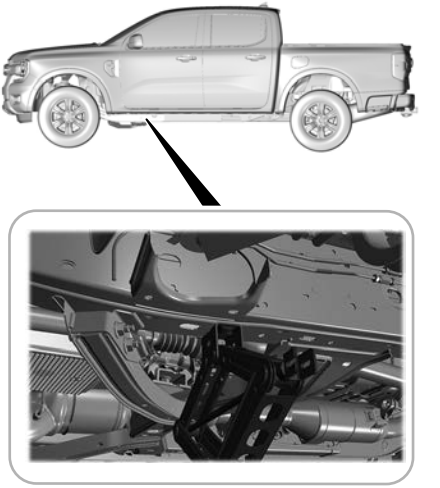

Front Jacking Points With Fuel Filter With High-Rider

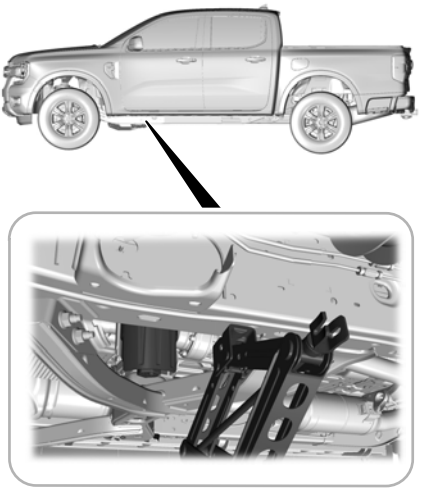

Front Jacking Points With Fuel Filter With Low-Rider

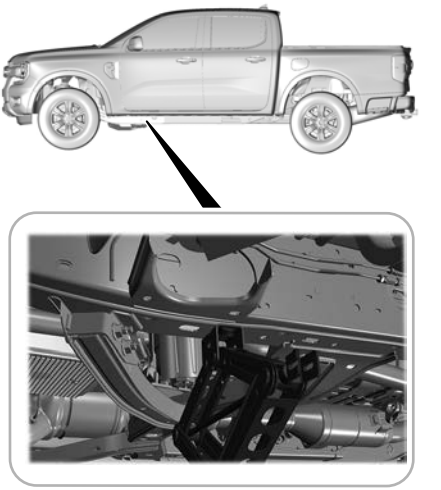

Rear Jacking Points

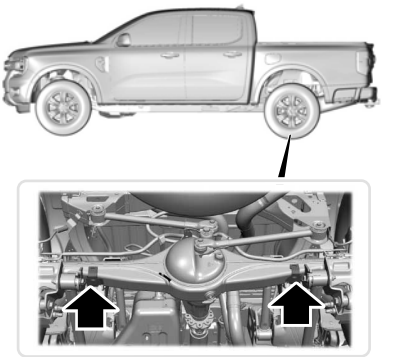

1. Place the vehicle jack at the jacking point next to the tire you are changing.

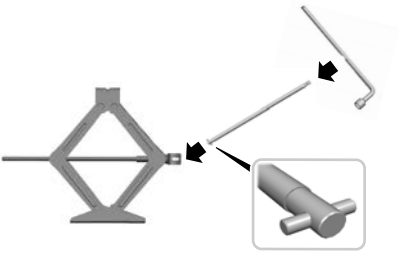

Note: *When you are changing the front flat tire, connect the jack handle to the jack. Operate the jack handle with the lug nut wrench.*

2. Assemble the jack handle, including the required extension tubes depending on the position you are jacking, and turn the jack handle clockwise until the wheel is completely off the ground.

Note: *When changing the rear flat tire, connect all the handles together to extend the jack handle.*

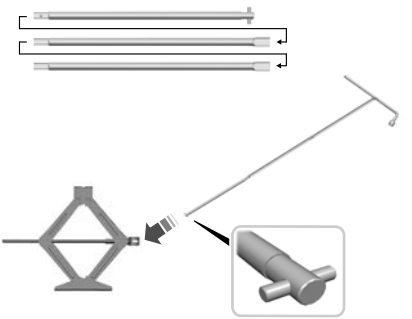

3. Raise your vehicle until the tire is clear of the ground.
4. Use the locking wheel nut key to loosen the locking wheel nut.
5. Remove the lug nuts and the road wheel.

Installing a Road Wheel

WARNING: Use only approved wheel and tire sizes. Using other sizes could damage your vehicle.

WARNING: Do not fit run flat tires on vehicles that were not originally fitted with them. See an authorized dealer for more details about compatibility.

WARNING: Make sure there is no grease or oil on the threads or the surface between the wheel studs and the wheel nuts. This can cause the wheel nuts to loosen while driving.

WARNING: Do not install alloy wheels using wheel nuts designed for use with steel wheels.

WARNING: Have the wheel nuts checked for tightness and the tire pressure checked as soon as possible.

Note: *Make sure the wheel and hub contact surfaces are free from foreign matter.*

Note: *Make sure the cones on the lug nuts are against the wheel.*

1. Install the wheel.
2. Install the lug nuts and finger tighten.
3. Install the locking lug nut key.

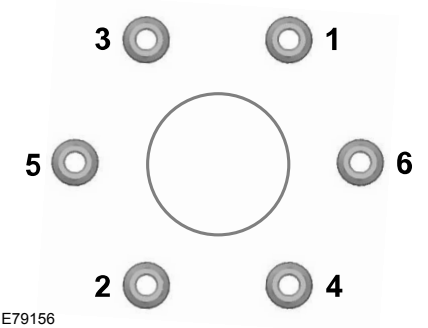

E79156

4. Lower your vehicle and remove the vehicle jack.
5. Fully tighten all of the lug nuts in the sequence shown. See **Wheel Nuts** (page 554).

Stowing the Flat or Spare Tire

1. If there is a winch cable guard on the vehicle, align the insert clips on the winch cable guard to the wheel nut holes, then push the metal plate until it's fully attached to the back side of the wheel.
2. Lay the tire on the ground, near the rear of the vehicle, with the valve stem side facing up.
3. Slide the wheel partially under the vehicle and install the retainer through the wheel center. You may have to remove the wheel center cap prior to pushing the retainer through the center of the wheel. To remove the center cap, press it off with the jack tool from the inner side of the wheel. Pull on the cable to align the components at the end of the cable.
4. Insert the handle into the guide hole and engage the winch.

Note: *If there is a spare wheel lock on the vehicle, find the spare wheel lock key in the glove box and attach the key on the front end of the jack tool.*

5. Turn the swivel wrench clockwise until the tire is raised to its stowed position underneath the vehicle. The wrench becomes harder to turn and the spare tire winch ratchets or slips when the tire is raised to its maximum tightness. A clicking sound is heard from the winch indicating the tire is properly stowed.

Note: *Ideally three clicks should be sufficient for spare wheel stowage.*

6. Carefully place all tools back to the tool kit bag.
7. Reinstall the tool kit bag in the original position.
8. Reinstall the jack properly on the bracket and secure the wing nut.
9. Unblock the wheel. Place the warning triangle back in the vehicle.

Note: *Do not use power tools on the spare wheel winch input drive.*

Note: *Only use the spare tire carrier to stow the tire and wheel combination provided with your vehicle. Other tire and wheel combinations can cause the tire carrier to fail.*

Ranger (TRA, TRB) Vehicles Built From: 01-11-2024, CG4010en enGBR, Edition date: 202407, DOM

WHEEL NUTS

WARNING: When you install a wheel, remove any corrosion, dirt or foreign materials present on the mounting surfaces of the wheel or the surface of the wheel hub, brake drum or brake disc that contacts the wheel. Make sure to secure any fasteners that attach the rotor to the hub so they do not interfere with the mounting surfaces of the wheel. Installing wheels without following these steps can cause the wheel nuts to loosen and the wheel to come off while your vehicle is in motion, resulting in loss of vehicle control, personal injury or death.

Bolt Size	Nm (lb.ft) [1]
M12 x 1.5	135 Nm (100 lb.ft)

[1] Torque specifications are for nut and bolt threads free of dirt and rust. Use only our recommended replacement wheel nuts and or wheel bolts.

Retighten the wheel nuts to the specified torque within 160 km (100 mi) after any wheel disturbance, such as tire rotation, changing a flat tire or wheel removal.

A Hub pilot bore.

Inspect the wheel pilot hole and mounting surface prior to installation. Remove any visible corrosion or loose particles.

Locking Wheel Nuts

The locking wheel nut key is located in the glove box or next to the vehicle jack.

You can obtain replacement locking wheel nuts or a locking wheel nut key using the reference number certificate.

ENGINE SPECIFICATIONS - 2.0L DIESEL

Engine	Specification
Compression ratio - single turbo.	16.3:1
Compression ratio - Bi turbo.	15.8:1
Displacement.	1.996 L (121.8 in^3)
Firing order.	1-3-4-2
Ignition system.	Diesel Compression Ignition
Required fuel.	Diesel

ENGINE SPECIFICATIONS - 2.3L ECOBOOST™, PLUG-IN HYBRID ELECTRIC VEHICLE (PHEV)

Engine	Specification
Compression ratio.	10.0:1
Displacement.	2,261 cm^3 (138 in^3)
Firing order.	1-3-4-2
Ignition system.	Coil on plug
Spark plug gap.	0.7 mm (0.028 in) - 0.8 mm (0.031 in)

ENGINE SPECIFICATIONS - 3.0L ECOBOOST™

Engine	Specification
Compression ratio.	10.5:1
Displacement.	2,956 cm^3 (180.4 in^3)
Firing order.	1-4-2-5-3-6
Ignition system.	Coil on plug
Required fuel.	Minimum 95 octane
Spark plug gap.	0.7 mm (0.028 in) - 0.8 mm (0.031 in)

Ranger (TRA, TRB) Vehicles Built From: 01-11-2024, CG4010en enGBR, Edition date: 202407, DOM

ENGINE SPECIFICATIONS - 3.0L DIESEL

Engine	Specification
Compression ratio.	16:1
Displacement.	2.99 L (182.5 in^3)
Firing order.	1-4-2-5-3-6
Ignition system.	Diesel Compression Ignition
Required fuel.	Diesel

VEHICLE DIMENSIONS - CHASSIS CAB

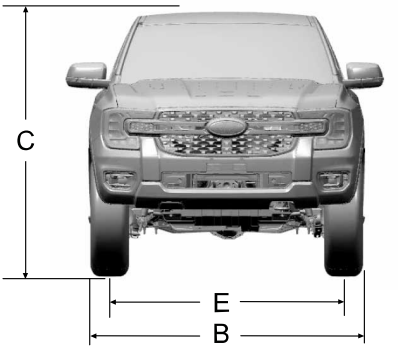

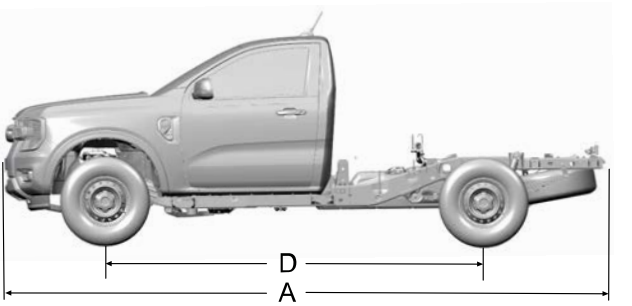

Callout	Dimension Description	mm (in)
A	Maximum length.	5,225 mm (205.7 in)
B	Overall width including exterior mirrors.	2,014 mm (79.3 in)
C	Overall height.	1,884 mm (74.2 in)
D	Wheelbase.	3,270 mm (128.7 in)
E	Track width.	1,620 mm (64 in)

Ranger (TRA, TRB) Vehicles Built From: 01-11-2024, CG4010en enGBR, Edition date: 202407, DOM

VEHICLE DIMENSIONS - DOUBLE CAB

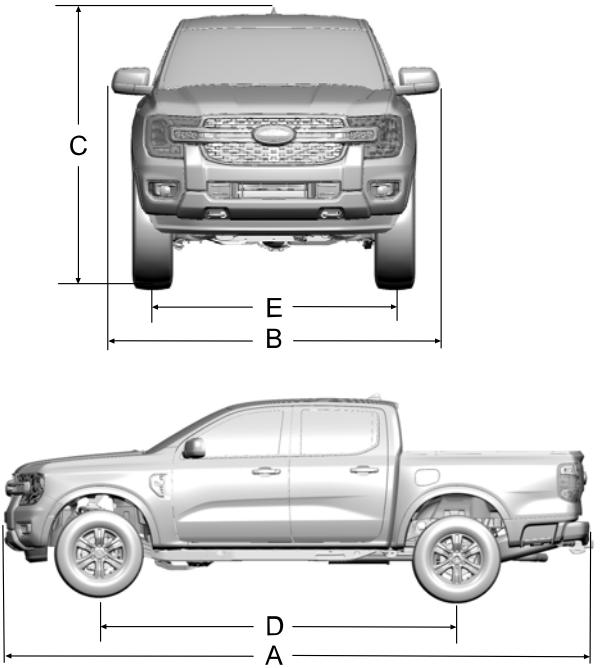

Callout	Dimension Description-base	mm (in)
A	Maximum length.	5,370 mm (211.4 in)
B	Overall width including exterior mirrors.	2,208 mm (86.9 in)
C	Overall height.	1,886 mm (74.3 in)
D	Wheelbase.	3,270 mm (128.7 in)
E	Track width.	1,620 mm (64 in)

Callout	Dimension Description-Wildtrak/Tremor	mm (in)
A	Maximum length.	5,370 mm (211.4 in)
B	Overall width including exterior mirrors.	2,208 mm (86.9 in)
C	Overall height with Rack Pack.	1,932 mm (76.1 in)
C	Overall height without Rack Pack.	1,916 mm (75.4 in)
D	Wheelbase.	3,270 mm (128.7 in)
E	Track width.	1,650 mm (65 in)

VEHICLE DIMENSIONS - SINGLE CAB

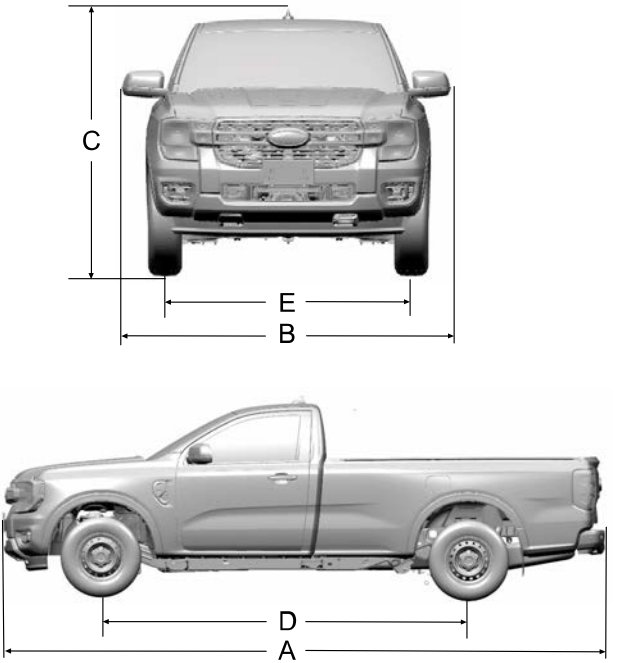

Callout	Dimension Description	mm (in)
A	Maximum length	5,370 mm (211.4 in)
B	Overall width including exterior mirrors.	2,208 mm (86.9 in)
C	Overall height.	1,884 mm (74.2 in)
D	Wheelbase.	3,270 mm (128.7 in)
E	Track width.	1,620 mm (64 in)

VEHICLE DIMENSIONS - SUPERCAB

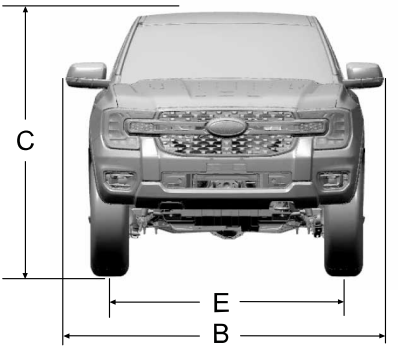

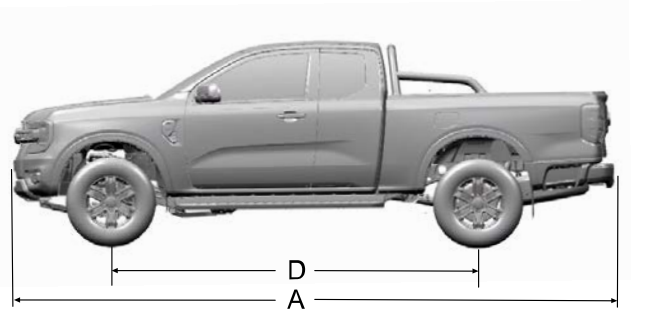

Callout	Dimension Description	mm (in)
A	Maximum length including license plate and bracket.	5,370 mm (211.4 in)
B	Overall width including exterior mirrors.	2,208 mm (86.9 in)
C	Mass in running order overall height.	1,874 mm (73.8 in)
D	Wheelbase.	3,270 mm (128.7 in)
E	Front track.	1,560 mm (61 in)

ENGINE OIL CAPACITY AND SPECIFICATION - 2.0L DIESEL

Use oil that meets the defined specification and viscosity grade.

If you do not use oil that meets the defined specification and viscosity grade, it could result in:

- Component damage that your vehicle warranty does not cover.
- Longer engine cranking periods.
- Increased emission levels.
- Reduced vehicle performance.
- Reduced fuel economy.

We recommend Motorcraft motor oil for your vehicle. If Motorcraft oil is not available, use motor oil of the recommended viscosity grade that meet the requirements for ACEA A5/B5.

Do not use supplemental engine oil additives because they are unnecessary and could lead to engine damage that your vehicle warranty does not cover.

Capacities

Variant	Including the Oil Filter
All.	8.1 L (1.78 gal)

Materials

Name	Specification
Engine Oil - SAE 5W-30	WSS-M2C913-D

Engine Oil Top-Up

If you are unable to find an engine oil that meets the specification defined by WSS-M2C913-D, it is acceptable to use a SAE 5W-30 engine oil defined by ACEA A5/B5.

Note: *Do not use more than 1 L (0.22 gal) of the alternative engine oil between scheduled service intervals.*

ENGINE OIL CAPACITY AND SPECIFICATION - 2.3L ECOBOOST™, PLUG-IN HYBRID ELECTRIC VEHICLE (PHEV)

Use oil that meets the defined specification and viscosity grade.

If you do not use oil that meets the defined specification and viscosity grade, it could result in:

- Component damage that your vehicle warranty does not cover.
- Longer engine cranking periods.
- Increased emission levels.
- Reduced vehicle performance.
- Reduced fuel economy.

We recommend Motorcraft motor oil for your vehicle. If Motorcraft oil is not available, use motor oil of the recommended viscosity grade that meet the requirements for ACEA C2.

Do not use supplemental engine oil additives because they are unnecessary and could lead to engine damage that your vehicle warranty does not cover.

Capacities

Variant	Including the Oil Filter
All.	5.3 L (5.6 qt)

Materials

Name	Specification
Engine Oil - SAE 0W-30	WSS-M2C950-A

Engine Oil Top-Up

If you are unable to find an engine oil that meets the specification defined by WSS-M2C950-A, it is acceptable to use a SAE 0W-30 engine oil defined by ACEA C2.

Note: *Do not use more than 1 L (0.22 gal) of the alternative engine oil between scheduled service intervals.*

ENGINE OIL CAPACITY AND SPECIFICATION - 3.0L ECOBOOST™

Use oil that meets the defined specification and viscosity grade.

If you do not use oil that meets the defined specification and viscosity grade, it could result in:

- Component damage that your vehicle warranty does not cover.
- Longer engine cranking periods.
- Increased emission levels.
- Reduced vehicle performance.
- Reduced fuel economy.

We recommend Motorcraft motor oil for your vehicle. If Motorcraft oil is not available, use motor oil of the recommended viscosity grade that meet the requirements for ACEA C2.

Do not use supplemental engine oil additives because they are unnecessary and could lead to engine damage that your vehicle warranty does not cover.

Capacities

Variant	Including the Oil Filter
All.	6.62 L (7.0 qt)

Materials

Name	Specification
Engine Oil - SAE 0W-30	WSS-M2C950-A

Engine Oil Top-Up

If you are unable to find an engine oil that meets the specification defined by WSS-M2C950-A, it is acceptable to use a SAE 0W-30 engine oil defined by ACEA C2.

Note: *Do not use more than 1 L (0.22 gal) of the alternative engine oil between scheduled service intervals.*

ENGINE OIL CAPACITY AND SPECIFICATION - 3.0L DIESEL

Use oil that meets the defined specification and viscosity grade.

If you do not use oil that meets the defined specification and viscosity grade, it could result in:

- Component damage that your vehicle warranty does not cover.
- Longer engine cranking periods.
- Increased emission levels.
- Reduced vehicle performance.
- Reduced fuel economy.

We recommend Motorcraft motor oil for your vehicle. If Motorcraft oil is not available, use motor oil of the recommended viscosity grade that meet the requirements for ACEA A5/B5.

Do not use supplemental engine oil additives because they are unnecessary and could lead to engine damage that your vehicle warranty does not cover.

Ranger (TRA, TRB) Vehicles Built From: 01-11-2024, CG4010en enGBR, Edition date: 202407, DOM

Capacities

Variant	Including the Oil Filter
All.	8.9 L (9.4 qt)

Materials

Name	Specification
Engine Oil - SAE 5W-30	WSS-M2C913-D

Engine Oil Top-Up

If you are unable to find an engine oil that meets the specification defined by WSS-M2C913-D, it is acceptable to use a SAE 5W-30 engine oil defined by ACEA A5/B5.

Note: *Do not use more than 1 L (0.22 gal) of the alternative engine oil between scheduled service intervals.*

COOLING SYSTEM CAPACITY AND SPECIFICATION - 2.0L DIESEL

Use coolant that meets the defined specification.

If you do not use coolant that meets the defined specification, it could reduce vehicle performance or cause component damage that your vehicle warranty does not cover.

Capacities

Variant	Quantity
Bi-turbo vehicles without engine heater.	9 L (1.98 gal)
Single turbo automatic transmission vehicles without engine heater	8.4 L (1.85 gal)
Single turbo manual transmission vehicles without engine heater	8 L (1.76 gal)
Vehicles with engine heater.	9.6 L (2.11 gal)
Vehicles with fuel operated heater.	9.7 L (2.13 gal)

Materials

Name	Specification
Antifreeze PU7J-M97B57-EA/EB/FA	WSS-M97B57-A2

WSS-M97B57-A2 is yellow coolant. Yellow coolant may appear fluorescent green in some cooling systems which is a normal characteristic.

Note: *Do not mix different colors or types of coolant in your vehicle. This reduces the effectiveness of the coolants and could void the warranty.*

COOLING SYSTEM CAPACITY AND SPECIFICATION - 2.3L ECOBOOST™, PLUG-IN HYBRID ELECTRIC VEHICLE (PHEV)

Use coolant that meets the defined specification.

If you do not use coolant that meets the defined specification, it could result in:

- Component damage that your vehicle warranty does not cover.
- Reduced vehicle performance.

Capacities

Variant	Quantity
With automatic transmission.	9.9 L (10.5 qt)
With manual transmission.	9.5 L (10.0 qt)

Materials

Name	Specification
Antifreeze PU7J-M97B57-EA/EB/FA	WSS-M97B57-A2

COOLING SYSTEM CAPACITY AND SPECIFICATION - 3.0L ECOBOOST™

Use coolant that meets the defined specification.

If you do not use coolant that meets the defined specification, it could reduce vehicle performance or cause component damage that your vehicle warranty does not cover.

Capacities

Variant	Quantity
All.	10.7 L (11.3 qt)

Materials

Name	Specification
Antifreeze PU7J-M97B57-EA/EB/FA	WSS-M97B57-A2

WSS-M97B57-A2 is yellow coolant. Yellow coolant may appear fluorescent green in some cooling systems which is a normal characteristic.

Note: *Do not mix different colors or types of coolant in your vehicle. This reduces the effectiveness of the coolants and could void the warranty.*

COOLING SYSTEM CAPACITY AND SPECIFICATION - 3.0L DIESEL

Use coolant that meets the defined specification.

If you do not use coolant that meets the defined specification, it could result in:

- Component damage that your vehicle warranty does not cover.
- Reduced vehicle performance.

Capacities

Variant	Quantity
Vehicles with engine heater.	10 L (10.6 qt)
Vehicles with fuel operated heater.	10.1 L (10.7 qt)

Materials

Name	Specification
Antifreeze PU7J-M97B57-EA/EB/FA	WSS-M97B57-A2

WSS-M97B57-A2 is yellow coolant. Yellow coolant may appear fluorescent green in some cooling systems which is a normal characteristic.

Note: *Do not mix different colors or types of coolant in your vehicle. This reduces the effectiveness of the coolants and could void the warranty.*

FUEL TANK CAPACITY - 2.0L DIESEL

Capacities

Variant	Quantity
Non-Raptor.	80 L (17.60 gal)
Raptor.	76.5 L (16.83 gal)

FUEL TANK CAPACITY - PLUG-IN HYBRID ELECTRIC VEHICLE (PHEV)

Capacities

Variant	Quantity
All.	80 L (17.60 gal)

FUEL TANK CAPACITY

Capacities

Variant	Quantity
All	77 L (16.94 gal)

FUEL TANK CAPACITY - 3.0L DIESEL

Capacities

Variant	Quantity
All	80 L (17.60 gal)

AIR CONDITIONING SYSTEM CAPACITY AND SPECIFICATION - 2.0L DIESEL, VEHICLES WITH: R1234YF REFRIGERANT

WARNING: The air conditioning refrigerant system contains refrigerant under high pressure. Only qualified personnel should service the air conditioning refrigerant system. Opening the air conditioning refrigerant system can cause personal injury.

Capacities

Variant	Refrigerant Type	Refrigerant	Refrigerant Oil
2.0L Single Turbo	R1234YF	0.51 ± 0.025 kg (1.124 ± 0.055 lb)	100 ml (3.38 fl oz)
2.0L Bi-Turbo	R1234YF	0.575 ± 0.025 kg (1.268 ± 0.055 lb)	130 ml (4.40 fl oz)

Materials

Name	Specification
Refrigerant - R-1234yf	WSS-M17B21-A
A/C Compressor Oil DE-12 FU7J-M2C300-AA	WSS-M2C300-A2

AIR CONDITIONING SYSTEM CAPACITY AND SPECIFICATION - 2.0L DIESEL, VEHICLES WITH: R134A REFRIGERANT

WARNING: The air conditioning refrigerant system contains refrigerant under high pressure. Only qualified personnel should service the air conditioning refrigerant system. Opening the air conditioning refrigerant system can cause personal injury.

Capacities

Variant	Refrigerant Type	Refrigerant	Refrigerant Oil
2.0L Single Turbo	R134A	0.58 ± 0.025 kg (1.279 ± 0.055 lb)	100 ml (3.38 fl oz)
2.0L Bi-Turbo	R134A	0.63 ± 0.025 kg (1.389 ± 0.055 lb)	130 ml (4.40 fl oz)

Materials

Name	Specification
Refrigerant - R-134A	WSH-M17B19-A
Compressor Oil - Air Conditioning 6U7J-M1C231-CA	WSH-M1C231-B

AIR CONDITIONING SYSTEM CAPACITY AND SPECIFICATION - PLUG-IN HYBRID ELECTRIC VEHICLE (PHEV)

WARNING: The air conditioning refrigerant system contains refrigerant under high pressure. Only qualified personnel should service the air conditioning refrigerant system. Opening the air conditioning refrigerant system can cause personal injury.

Capacities

Refrigerant	Refrigerant Oil
0.7 kg (1.543 lb)	80 ml (2.71 fl oz)

Materials

Name	Specification
Refrigerant - R-134A	WSH-M17B19-A
Compressor Oil - Air Conditioning 6U7J-M1C231-CA	WSH-M1C231-B

AIR CONDITIONING SYSTEM CAPACITY AND SPECIFICATION - PLUG-IN HYBRID ELECTRIC VEHICLE (PHEV)

WARNING: The air conditioning refrigerant system contains refrigerant under high pressure. Only qualified personnel should service the air conditioning refrigerant system. Opening the air conditioning refrigerant system can cause personal injury.

Use refrigerant and oil that meets the defined specifications.

If you do not use refrigerant and oil that meets the defined specifications, it could result in:

- Component damage that your vehicle warranty does not cover.
- Reduced vehicle performance.

Capacities

Refrigerant	Refrigerant Oil
0.625 kg (22.0 oz)	160 cm^3 (5.41 fl oz)

Materials

Name	Specification
Refrigerant - R-1234yf	WSS-M17B21-A
A/C Compressor Oil DE-12 FU7J-M2C300-AA	WSS-M2C300-A2

AIR CONDITIONING SYSTEM CAPACITY AND SPECIFICATION - 3.0L ECOBOOST™

WARNING: The air conditioning refrigerant system contains refrigerant under high pressure. Only qualified personnel should service the air conditioning refrigerant system. Opening the air conditioning refrigerant system can cause personal injury.

Use refrigerant and oil that meets the defined specifications.

If you do not use refrigerant and oil that meets the defined specifications, it could result in:

- Component damage that your vehicle warranty does not cover.
- Reduced vehicle performance.

Capacities

Variant	Refrigerant	Refrigerant Oil
All.	0.63 kg (1 lb)	80 ml (2.71 fl oz)

Materials

Name	Specification
Compressor Oil - Air Conditioning 6U7J-M1C231-CA	WSH-M1C231-B
Refrigerant - R-134A	WSH-M17B19-A

AIR CONDITIONING SYSTEM CAPACITY AND SPECIFICATION - 3.0L DIESEL

WARNING: The air conditioning refrigerant system contains refrigerant under high pressure. Only qualified personnel should service the air conditioning refrigerant system. Opening the air conditioning refrigerant system can cause personal injury.

Use refrigerant and oil that meets the defined specifications.

If you do not use refrigerant and oil that meets the defined specifications, it could result in:

- Component damage that your vehicle warranty does not cover.
- Reduced vehicle performance.

Capacities

Refrigerant Type	Refrigerant	Refrigerant Oil
R1234YF	0.575 ± 0.025 kg (1.268 ± 0.055 lb)	130 ml (4.40 fl oz)

Materials

Name	Specification
Refrigerant - R-1234yf	WSS-M17B21-A
A/C Compressor Oil DE-12 FU7J-M2C300-AA	WSS-M2C300-A2

WASHER FLUID SPECIFICATION

Capacities

Variant	Quantity
All.	Fill as required.

Materials

Name	Specification
Screen Wash - Winter Premium 55 PU7J-19C544-**	WSS-M8B18-A2

ADBLUE® CAPACITY AND SPECIFICATION

Capacities

Variant	Quantity
Base.	19.3 L (4.25 gal)
Raptor.	18 L (3.96 gal)

Materials

Name	Specification
AdBlue® HAMJ-M99C130-xx	WSS-M99C130-A

Note: *ADBLUE is only for engines with Selective Catalytic Reduction System.*

MANUAL TRANSMISSION FLUID CAPACITY AND SPECIFICATION

Use fluid that meets the defined specification and viscosity grade.

If you do not use fluid that meets the defined specification and viscosity grade, it could result in:

- Component damage that your vehicle warranty does not cover.
- Reduced vehicle performance.
- Reduced fuel economy.

Capacities

Variant	Quantity
5-Speed	2 L (2.1 qt) [1]
6-Speed	2.4 L (2.5 qt) [1]

[1] Approximate total oil volume/capacity. Actual amount could vary between fluid changes.

Note: *Transmission Oil is "filled-for-life" – No requirement to Service the transmission oil.*

Materials

Name	Specification
Transmission Fluid 75W MX KU7J-M2C955-AA	WSS-M2C955-A1

CLUTCH FLUID CAPACITY AND SPECIFICATION

Only use fluid that meets Ford specifications.

Materials

Name	Specification
Brake Fluid DOT 4 LV High Performance RU7J-M6C65-xxxx	WSS-M6C65-A2

AUTOMATIC TRANSMISSION FLUID CAPACITY AND SPECIFICATION

Use fluid that meets the defined specification and viscosity grade.

If you do not use fluid that meets the defined specification and viscosity grade, it could result in:

- Component damage that your vehicle warranty does not cover.
- Reduced vehicle performance.
- Reduced fuel economy.

Note: *Only use MERCON ULV transmission fluid for automatic transmissions that require MERCON ULV transmission fluid. The use of any other fluid could cause transmission damage.*

Capacities

Variant	Quantity
10R80: Level 4-5 on dipstick.	12 L (12.7 qt) [1]
10R60: Level 3-4 on dipstick.	12.39 L (13.09 qt) [1]

[1] Approximate dry fill capacity. Actual amount could vary during fluid changes.

Materials

Name	Specification
Automatic Transmission Oil P-ULV HU7J-M2C949-AB,HU7J-M2C949-BA	WSS-M2C949-A,

Capacities

Variant	Quantity
6R80: Level to left side fill plug	11.47 L (12.12 qt) [1]

[1] Approximate dry fill capacity. Actual amount could vary during fluid changes.

Materials

Name	Specification
Automatic Transmission Oil C-ML5 7U7J-M2C938-AC	WSS-M2C938-A

BRAKE FLUID SPECIFICATION

Use fluid that meets the defined specification and viscosity grade.

If you do not use fluid that meets the defined specification and viscosity grade, it could result in:

- Component damage that your vehicle warranty does not cover.
- Reduced brake performance.

Note: *We recommend you use Dot 4 Low Viscosity (LV) High Performance Brake Fluid meeting WSS-M6C65-A2 specifications or ISO 4925 Class 6 standards. If you use any fluid other than the recommended fluid, it could cause reduced brake performance and not meet our performance standards. Keep brake fluid clean and dry. Contamination with dirt, water, petroleum products or other materials could result in brake system damage and possible failure.*

Capacities

Variant	Quantity
All.	Fill as required.

Materials

Name	Specification
Brake Fluid DOT 4 LV High Performance RU7J-M6C65-xxxx	WSS-M6C65-A2

TRANSFER CASE FLUID CAPACITY AND SPECIFICATION

Use fluid that meets the defined specification and viscosity grade.

If you do not use fluid that meets the defined specification and viscosity grade, it could result in:

- Component damage that your vehicle warranty does not cover.
- Reduced vehicle performance.

Capacities

Variant	Quantity
Four-wheel drive (Electronic shift on the Fly).	1.2 L (1.3 qt)
Automatic four-wheel drive.	1.55 L (1.6 qt)

Materials

Name	Specification
Automatic Transmission Oil C-ML5 7U7J-M2C938-AC	WSS-M2C938-A

FRONT AXLE FLUID CAPACITY AND SPECIFICATION - EXCLUDING: RAPTOR

Use fluid that meets the defined specification and viscosity grade.

If you do not use fluid that meets the defined specification and viscosity grade, it could result in:

- Component damage that your vehicle warranty does not cover.
- Reduced vehicle performance.

Capacities

Variant	Quantity
Without electronic locking differential and without front axle disconnect.	705 ± 25 ml (23.8 ± 0.8 fl oz)

Materials

Name	Specification
Rear Axle Oil SAE 80W-90 C2 4U7J-M2C197-BA	WSP-M2C197-A

FRONT AXLE FLUID CAPACITY AND SPECIFICATION - RAPTOR

Use fluid that meets the defined specification and viscosity grade.

If you do not use fluid that meets the defined specification and viscosity grade, it could result in:

- Component damage that your vehicle warranty does not cover.
- Reduced vehicle performance.

Capacities

Variant	Quantity
With electronic locking differential.	775 ± 25 ml (26.2 ± 0.8 fl oz)

Materials

Name	Specification
Rear Axle Oil SAE 80W-90 C2 4U7J-M2C197-BA	WSP-M2C197-A

REAR AXLE FLUID CAPACITY AND SPECIFICATION - EXCLUDING: RAPTOR

Use fluid that meets the defined specification and viscosity grade.

If you do not use fluid that meets the defined specification and viscosity grade, it could result in:

- Component damage that your vehicle warranty does not cover.
- Reduced vehicle performance.

Capacities

Variant	Specification	Quantity
Standard axle high ride.	80W90	1.6 ± 0.03 L (55 ± 0 fl oz)
Standard axle low ride.	80W90	1.19 ± 0.03 L (40 ± 0 fl oz)
Locking axle high ride.	80W90	1.54 ± 0.03 L (50 ± 0 fl oz)

Materials

Name	Specification
Rear Axle Oil SAE 80W-90 C2 4U7J-M2C197-BA	WSP-M2C197-A

REAR AXLE FLUID CAPACITY AND SPECIFICATION - RAPTOR

Use fluid that meets the defined specification and viscosity grade.

If you do not use fluid that meets the defined specification and viscosity grade, it could result in:

- Component damage that your vehicle warranty does not cover.
- Reduced vehicle performance.

Capacities

Variant	Specification	Quantity
Raptor.	75W85	3.35 ± 0.1 L (115 ± 5 fl oz)

Materials

Name	Specification
Rear Axle Oil SAE 75W-85 EU7J-M2C942-AA	WSS-M2C942-A

VEHICLE IDENTIFICATION NUMBER

LOCATING THE VEHICLE IDENTIFICATION NUMBER

Single Cab

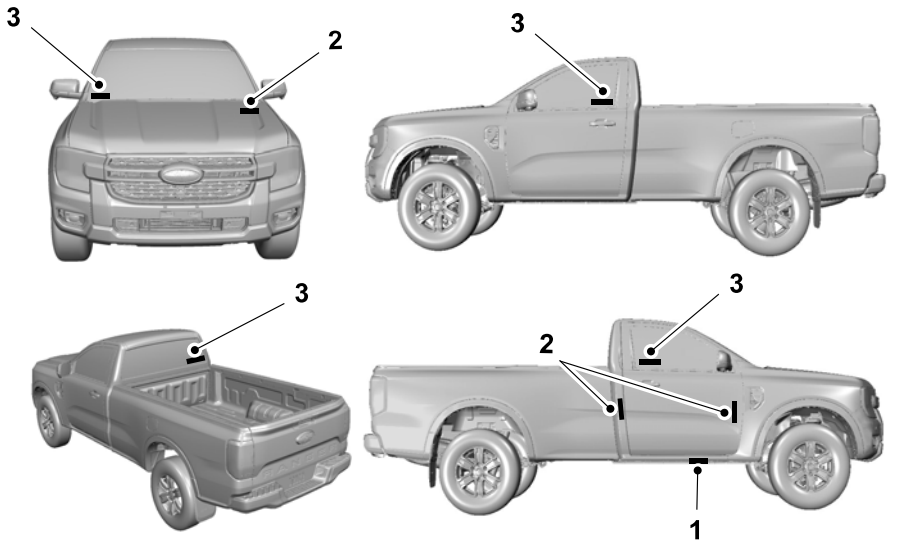

1 Main vehicle identification number engraving – Chassis side member, right side.

2 Vehicle identifier section adhesive label - Inside engine compartment, left side. A or B-pillar, right side. On the floor under the driver seat.

3 Vehicle identifier section engraving in glass - Windshield, door windows and rear window.

Note: *The adhesive labels and glass engraving have the eight vehicle identifier section characters.*

Note: *Location of labels are dependent upon market requirements.*

Double Cab

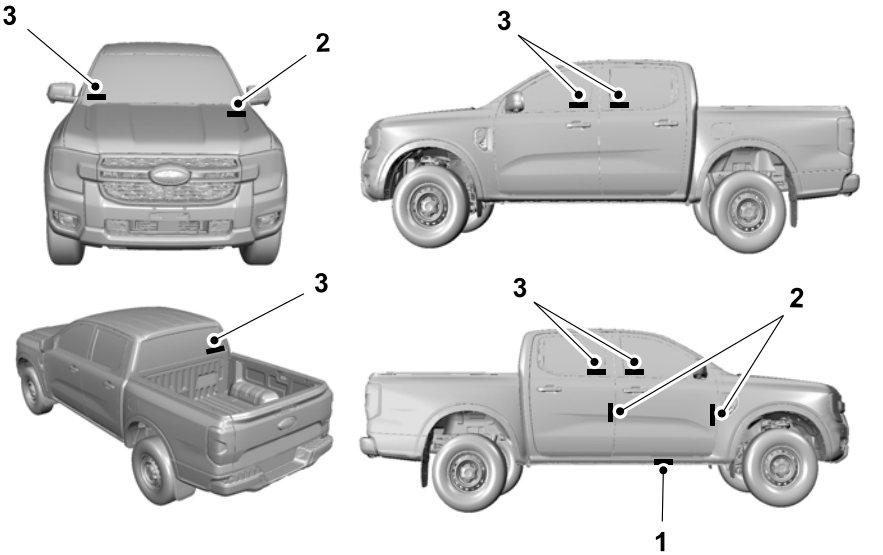

1 Main vehicle identification number engraving – Chassis side member, right side.

2 Vehicle identifier section adhesive label - Inside engine compartment, left side. A or B-pillar, right side. On the floor under the driver seat.

3 Vehicle identifier section engraving in glass - Windshield, door windows and rear window.

Note: *The adhesive labels and glass engraving have the eight vehicle identifier section characters.*

Note: *Location of labels are dependent upon market requirements.*

RAP Cab

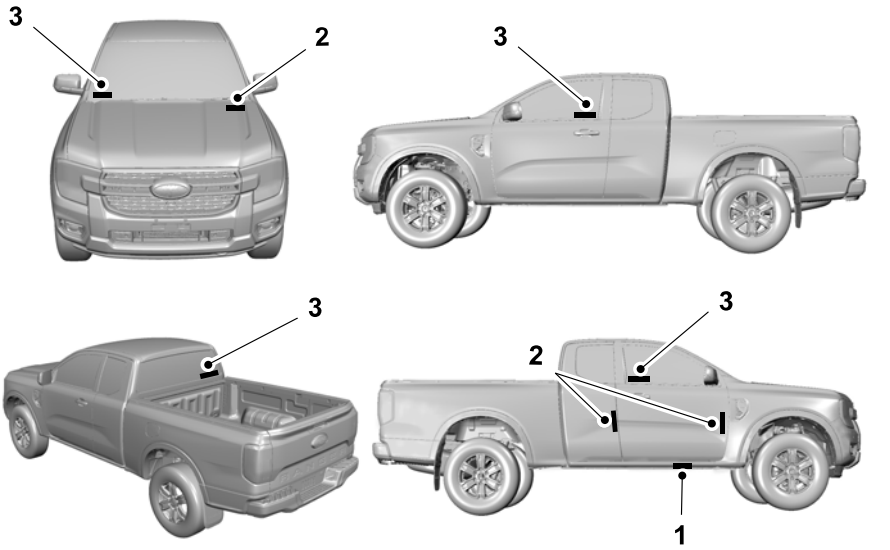

1 Main vehicle identification number engraving – Chassis side member, right side.

2 Vehicle identifier section adhesive label - Inside engine compartment, left side. A or B-pillar, right side. On the floor under the driver seat.

3 Vehicle identifier section engraving in glass - Windshield, door windows and rear window.

Note: *The adhesive labels and glass engraving have the eight vehicle identifier section characters.*

Note: *Location of labels are dependent upon market requirements.*

VEHICLE IDENTIFICATION PLATE

VEHICLE IDENTIFICATION PLATE OVERVIEW

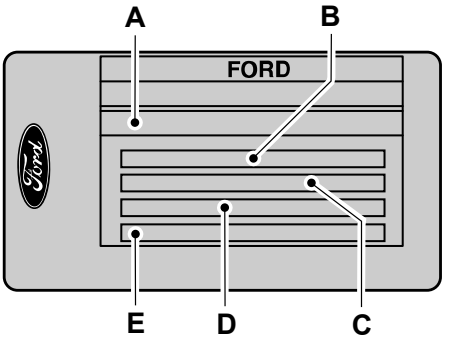

E85610

A Vehicle identification number.
B Gross vehicle weight.
C Gross train weight.
D Maximum front axle weight.
E Maximum rear axle weight.

The vehicle identification plate with your vehicle identification number and maximum weights is located on the bottom of the lock side of the passenger door aperture.

Note: *The vehicle identification plate may vary to that shown.*

Note: *Information on the vehicle identification plate is dependent upon market requirements.*

WHAT IS A CONNECTED VEHICLE

A connected vehicle has technology that allows your vehicle to connect to a mobile network and for you to access a range of features. When used in conjunction with the Ford mobile app, it could allow you to monitor and control your vehicle further, for example checking the tire pressures, the fuel level and the vehicle location. For additional information, refer to the local Ford website.

CONNECTED VEHICLE REQUIREMENTS

Connected service and related feature functionality requires a compatible vehicle network.

Some remote features require additional service activation. Log in to your Ford account for details. Some restrictions, third party terms and message or data rates may apply.

CONNECTED VEHICLE LIMITATIONS

Evolving technology, cellular networks, or regulations could affect functionality and availability, or continued provision of some features. These changes could even stop some features from functioning.

CONNECTING THE VEHICLE TO A MOBILE NETWORK

WHAT IS THE MODEM

The modem allows access to a range of features built into your vehicle.

ENABLING AND DISABLING THE MODEM

1. From the settings menu, press Connectivity. See **Center Display** (page 599).
2. Press Connected Vehicle Features.
3. Switch vehicle connectivity on or off.

CONNECTING FORDPASS TO THE MODEM

1. Make sure that the modem is enabled using the vehicle settings menu.
2. Open the FordPass app on your device and log in.
3. Add your vehicle or select your vehicle if already added.
4. Select the option to activate your vehicle.
5. Make sure that the name on the screen matches the name shown in your FordPass account.
6. Confirm that FordPass account is connected to the modem.

CONNECTING THE VEHICLE TO A WI-FI NETWORK

1. From the settings menu, press Connectivity. See **Center Display** (page 599).
2. Press Wi-Fi.
3. Switch Wi-Fi on.
4. Press View Available Networks.
5. Select an available Wi-Fi network.

Note: *Enter the network password to connect to a secure network.*

Ranger (TRA, TRB) Vehicles Built From: 01-11-2024, CG4010en enGBR, Edition date: 202407, DOM

CONNECTED VEHICLE SETTINGS

You can adjust several settings on the touchscreen under the connected vehicle features menu, such as:

- Vehicle connectivity.
- Share vehicle data.
- Share vehicle location.
- Share driving data.

Note: *Depending on your vehicle, different options may be available.*

Note: *Editing connectivity settings could result in some features not operating correctly or at all. When you edit connectivity settings, pop-up messages may appear to notify you that services will not work without that setting. If you switch a feature on, pop-up messages could appear informing you of the settings that will be turned on. Some features, for example driver assistance features, use map data. We recommend having all connected vehicle settings enabled to allow the map content to be updated to the latest version.*

Press the button next to a menu option for more information.

CONNECTED VEHICLE – TROUBLESHOOTING

CONNECTED VEHICLE – FREQUENTLY ASKED QUESTIONS

Why is my Ford mobile app not connecting to my vehicle?

- The modem is not enabled. Switch vehicle connectivity on.
- The network signal is weak. Move your vehicle closer to a place where the network signal is not obstructed.

Why can I not connect to a Wi-Fi network?

- You entered the wrong network password. Enter the correct password.
- The network signal is weak. Move your vehicle closer to the Wi-Fi router or to a place where the network signal is not obstructed.
- There are multiple access points in range with the same network name. Choose a unique name for your network. Do not use the default name unless it contains a unique identifier, for example as part of the MAC address.

Why does the Wi-Fi connection disconnect after successful connection?

- The network signal is weak. Move your vehicle closer to the Wi-Fi router or to a place where the network signal is not obstructed.

What can I do if I am close to a Wi-Fi router but the network signal strength is weak?

- If your vehicle has a heated windshield, position your vehicle so that the windshield is not facing the Wi-Fi router.
- If your vehicle has metallic tinting on the windows but not on the windshield, position your vehicle so that the windshield is facing the Wi-Fi router or open the windows that are facing the router.
- If your vehicle has metallic tinting on the windows and the windshield, open the windows that are facing the router.
- If your vehicle is in a garage and you have the garage door closed, open the garage door as it could block the signal.

Ranger (TRA, TRB) Vehicles Built From: 01-11-2024, CG4010en enGBR, Edition date: 202407, DOM

Why can I not see a network I expect to see in the list of available networks?

- The network is hidden. Make the network visible and try again, or manually add a network in the Wi-Fi settings menu.
- Some network security types are not supported, for example WEP.

Why do software downloads take too long?

- The network signal is weak. Move your vehicle closer to the Wi-Fi router or to a place where the network signal is not obstructed.
- Wi-Fi network is in high demand or has a slow Internet connection. Use a more reliable Wi-Fi network.

Why does the software not update when the system seems to connect to a Wi-Fi network and the signal strength is excellent?

- No software update is available at this time.
- Select automatic updates option in the settings menu to enable automatic software update or contact an authorized dealer.
- There could be a connection problem. Test the network using another device.

CREATING A VEHICLE WI-FI HOTSPOT

You can create a Wi-Fi hotspot in your vehicle and allow devices to connect to it for access to the Internet.

1. From the settings menu, press Connectivity. See **Center Display** (page 599).
2. Press Vehicle Hotspot.

Note: *The vehicle hotspot default setting is on.*

3. Press Settings under the Vehicle Hotspot menu.
4. Press Edit.
5. Switch the Wi-Fi Visibility option on or off.

Note: *The Wi-Fi visibility default setting is on.*

Finding the Wi-Fi Hotspot Name and Password

1. From the settings menu, press Connectivity. See **Center Display** (page 599).
2. Press Vehicle Hotspot.
3. Press Settings under the Vehicle Hotspot menu.

Note: *The network name is the hotspot name.*

4. Switch the Show Password option on or off.

Connecting a Device to the Wi-Fi Hotspot

1. On your device, switch Wi-Fi on and select the hotspot from the list of available Wi-Fi networks.
2. When prompted, enter the password.

Purchasing a Data Plan

1. Connect a device to the hotspot.

Note: *The vehicle network carrier's portal opens on your device.*

2. If the portal does not open on your device, open a website and it redirects to the vehicle network carrier's portal.

Note: *Secure websites do not redirect.*

3. Follow the instructions on the carrier portal to purchase a plan.

Note: *If you have an active plan, the system does not redirect to the vehicle network carrier's portal when you connect a device. Visit the vehicle network carrier's website to purchase more data.*

Note: *If data usage information is available in the vehicle hotspot menu, it is approximate.*

Note: *If you carry out a system reset, the system does not remove your vehicle from your vehicle network carrier's account. To remove your vehicle from the account, contact your vehicle network carrier.*

Note: *The vehicle network carrier provides Vehicle Hotspot services, subject to your vehicle network carrier agreement, coverage and availability.*

CHANGING THE VEHICLE WI-FI HOTSPOT NAME OR PASSWORD

1. From the settings menu, press Connectivity. See **Center Display** (page 599).
2. Press Vehicle Hotspot.
3. Press Settings under the Vehicle Hotspot menu.
4. Press Edit.
5. Press Change Network Name.
6. Enter your required network name.

7. Press enter to save the network name.
8. Press Change Password.
9. Enter your required password.
10. Press enter to save the password.

Changing the Wi-Fi Hotspot Frequency

The vehicle hotspot frequency band is selectable depending upon your device capabilities. You cannot connect your device to the vehicle hotspot if it does not support the selected frequency band.

1. From the settings menu, press Connectivity. See **Center Display** (page 599).
2. Press Vehicle Hotspot.
3. Press Settings under the Vehicle Hotspot menu.
4. Press Edit.
5. Select a frequency.

VEHICLE WI-FI HOTSPOT – TROUBLESHOOTING

VEHICLE WI-FI HOTSPOT – FREQUENTLY ASKED QUESTIONS

Why can I not see the Wi-Fi hotspot name when I search for Wi-Fi networks on my cell phone or other device?

- Make sure Wi-Fi hotspot visibility is on.
- The system does not provide a Wi-Fi hotspot at this time.
- Check what frequency the hotspot is transmitting in the vehicle hotspot settings menu. If the frequency is 5 GHz and your device cannot see the network, change the frequency to 2.4 GHz.

AUDIO SYSTEM PRECAUTIONS

WARNING: Driving while distracted can result in loss of vehicle control, crash and injury. We strongly recommend that you use extreme caution when using any device that may take your focus off the road. Your primary responsibility is the safe operation of your vehicle. We recommend against the use of any hand-held device while driving and encourage the use of voice-operated systems when possible. Make sure you are aware of all applicable local laws that may affect the use of electronic devices while driving.

Listening to loud audio for long periods of time could damage your hearing.

SWITCHING THE AUDIO UNIT ON AND OFF

Press the button on the volume control.

SELECTING THE AUDIO SOURCE

1. Press your preferred audio source.

Note: *Available audio sources are listed along the top of the radio screen.*

MEDIA CONTROL BUTTONS

Press to play a track. Press again to pause the track.

Note: *Not all sources can be paused.*

Press the button to skip to the next track.

Press and hold the button to fast forward through the track.

Press the button once to return to the beginning of a track. Repeatedly press the button to return to previous tracks.

Press and hold the button to fast rewind through the track.

Press the button on the touchscreen to switch shuffle mode on or off.

Note: *Not all sources have shuffle mode.*

Press the button on the touchscreen to change repeat mode.

Note: *Not all sources have repeat mode.*

ADJUSTING THE VOLUME

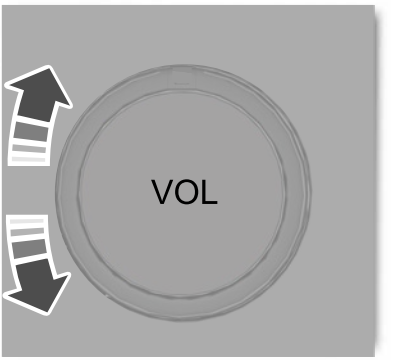

Turn to adjust the volume.

Using the Steering Wheel

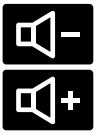

Press the buttons to adjust the volume.

SETTING A MEMORY PRESET

1. Select a station.
2. Press and hold a memory preset button on the touchscreen.

Note: *The audio mutes briefly while the system saves the preset and returns once stored.*

Note: *You can save presets from multiple radio bands to the memory preset bar.*

ADJUSTING THE SOUND SETTINGS

To access the sound settings menu:

1. From the settings menu, press Sound. See **Center Display** (page 599).

From the menu, you can adjust the following:

- Tone settings.
- Balance and fade.
- Speed compensated volume.
- Volume settings.
- Sound mode/Occupancy mode

Note: *Depending on your vehicle options, not all settings are available.*

SETTING THE CLOCK AND DATE

1. From the settings menu, press General. See **Center Display** (page 599).
2. Scroll to Clock.
3. Set the time.

Note: *The AM and PM options are not available if 24-hour mode is on.*

Switching Automatic Time Updates On and Off

1. From the settings menu, press General. See **Center Display** (page 599).
2. Scroll to Clock.
3. Switch Auto Time Update on or off.

FM RADIO

FM RADIO LIMITATIONS

The further you travel from a FM station, the weaker the signal and the weaker the reception.

Hills, mountains, tall buildings, bridges, tunnels, freeway overpasses, parking garages, dense tree foliage and thunderstorms can interfere with the reception.

When you pass a ground-based broadcast repeating tower, a stronger signal may overtake a weaker one and result in the audio system muting.

SELECTING AN FM RADIO STATION

Manually Selecting a Radio Station

Press the button on the radio tuner to go up the frequency band.

Press the button on the radio tuner to go down the frequency band.

Using Seek

Press to seek the next station up the frequency band.

Press and hold to quickly seek up the frequency band.

Press to seek the next station down the frequency band.

Press and hold to quickly seek down the frequency band.

Using the Station List

1. Press the search button on the radio screen.
2. Press a radio station from the list.

DIGITAL AUDIO BROADCASTING RADIO

WHAT IS DIGITAL AUDIO BROADCASTING RADIO

Digital Audio Broadcasting (DAB) is a digital radio standard for broadcasting digital audio radio services. Your radio allows you to listen to DAB radio stations.

DIGITAL AUDIO BROADCASTING RADIO LIMITATIONS

Coverage differs from region to region and influences the quality of reception. It is broadcast nationwide, regionally and locally. Coverage may vary on weather conditions and terrain.

Note: *This could cause the audio to dropout.*

WHAT IS SERVICE LINKING

If you leave the coverage area of a DAB radio station the system switches to the corresponding FM radio station if one is available.

SWITCHING SERVICE LINKING ON AND OFF

1. From the apps menu, press Radio. See **Center Display** (page 599).
2. Press DAB.
3. Press Settings.
4. Switch Service Linking on or off.

SELECTING A DIGITAL AUDIO BROADCASTING RADIO STATION

Manually Selecting a Radio Station

Press the button on the radio tuner to go up the frequency band.

Press the button on the radio tuner to go down the frequency band.

Using Seek

Press to seek the next station up the frequency band.

Press and hold to quickly seek up the frequency band.

Press to seek the next station down the frequency band.

Press and hold to quickly seek down the frequency band.

Ranger (TRA, TRB) Vehicles Built From: 01-11-2024, CG4010en enGBR, Edition date: 202407, DOM

Selecting a Radio Station From a List

1. Press the search button on the radio screen.
2. Press a radio station from the list.

DIGITAL AUDIO BROADCASTING RADIO SETTINGS

Slideshow

When switched on and available, the touchscreen displays supplied pictures in place of the station logo. The pictures can be enlarged by touching them.

Electronic Program Guide

When enabled and available, the touchscreen displays what is currently playing and what plays next on the selected station.

Station Logo

When switched on and available, the touchscreen displays the current FM or DAB station logo.

News Announcements

When switched on, the current playing audio source may be interrupted by news announcements. An icon on the radio screen indicates when news announcements are enabled. An icon in the status bar indicates when an announcement is active.

Regional

When switched on, the radio stays tuned to the selected FM or DAB regional station. When switched off, the radio may tune to a regional alternative of the station depending on reception.

Station List Order

Allows you to order the DAB station list by name or network.

TRAFFIC ANNOUNCEMENTS

SWITCHING TRAFFIC ANNOUNCEMENTS ON AND OFF

TA Press the button on the radio screen.

When switched on, the current playing audio source may be interrupted by traffic announcements. An icon on the radio screen indicates when announcements are enabled. An icon in the status bar indicates when an announcement is active.

CENTER DISPLAY OVERVIEW

WARNING: Driving while distracted can result in loss of vehicle control, crash and injury. We strongly recommend that you use extreme caution when using any device that may take your focus off the road. Your primary responsibility is the safe operation of your vehicle. We recommend against the use of any hand-held device while driving and encourage the use of voice-operated systems when possible. Make sure you are aware of all applicable local laws that may affect the use of electronic devices while driving.

For your safety, features that are not critical while driving are not available when the vehicle is moving at or above 8 km/h (5 mph).

Note: *Illustrations are provided for conceptual understanding only and may appear differently on your vehicle.*

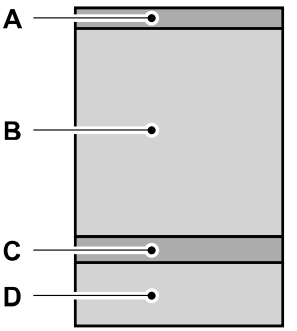

A Status bar. See **Status Bar** (page 599).

B Open app area.

C App bar.

D Climate control.

STATUS BAR

The status bar appears at the top of the display. The following buttons and icons can appear in the status bar.

Note: *Some buttons and icons may not apply to your vehicle or may not appear exactly as shown.*

App Launcher

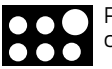

Press to see a list of apps. To open an app, select the app.

Settings

Press to open the settings menu. See **Settings** (page 600).

Apple CarPlay and Android Auto

Press to open Apple CarPlay or Android Auto. See **Switching Apple CarPlay On and Off** (page 609). See **Switching Android Auto™ On and Off** (page 609).

Alexa Built-In

Press to set up Alexa. See **Alexa Built-In** (page 604).

Camera

Press to access the camera screen.

Connected Device

Automatic crash notification system off.

Device signal strength.

Device signal roaming.

Device signal not available.

Vehicle Data and Location

Vehicle data sharing on.

Vehicle data sharing off.

Vehicle location sharing on.

Vehicle data and vehicle location sharing on.

Vehicle Signal

Vehicle signal strength.

Vehicle signal roaming.

Vehicle signal not available.

Wi-Fi connected.

Traffic Announcements

Traffic announcements are turned on but are not supported by the selected station.

Traffic announcements are turned on and supported by the selected station but are not active.

Traffic announcements are active.

Note: *If no traffic announcement icons are displayed, traffic announcements are turned off.*

Wireless Charging

Wireless charging active.

Device connected and not charging.

Personal Profiles

Press to change or add a profile.

SETTINGS

1. Press to open the settings menu.
2. Select an item on the side menu to access specific settings. The main area changes as you select different side menu items.
3. Press the icon again to close the list of settings.

You can change the display language and other measurement units under the General menu.

If you see this icon next to a menu option, press it to expand the menu and see additional settings.

If you see this icon next to a menu option, press it for more information.

Display Settings

From the display menu you can do the following:

- Switch the calm screen on.
- Manually adjust the screen brightness.
- Set the display mode.

Touchscreen Brightness

To manually adjust the screen brightness, use the plus or minus buttons.

Note: *The display brightness is limited if the settings of the instrument panel lighting brightness are set to the highest or lowest setting.*

REBOOTING THE CENTER DISPLAY

You can reboot the center display using the controls on the steering wheel.

1. Simultaneously press and hold the seek forward and volume down button for 10 seconds.

Ranger (TRA, TRB) Vehicles Built From: 01-11-2024, CG4010en enGBR, Edition date: 202407, DOM

FORD ASSISTANT

USING FORD ASSISTANT

The digital assistant allows you to control vehicle features using conversational requests.

To begin a voice interaction using the wake word, say the selected wake word, then say your command.

Press the voice interaction button on the steering wheel. A tone sounds before you can say your command.

Note: *You may need to enable your vehicle's modem to use certain voice commands. See* ***Enabling and Disabling the Modem*** *(page 590).*

Voice Command Examples

To see examples of what voice commands you can use with different features:

1. From the settings menu, press Ford Assistant. See **Center Display** (page 599).
2. Press Voice Command Help.
3. Select a feature.

FORD ASSISTANT SETTINGS

To access the settings menu:

1. From the settings menu, press Ford Assistant. See **Center Display** (page 599).

From the settings menu you can do the following:

- Switch listen for wake word on or off.
- Set the preferred wake word.
- Switch advanced mode on or off.
- Switch phone confirmation on or off.
- Switch the commands list on or off.
- View the commands help menu.

Press the button next to a menu option for more information.

FORD ASSISTANT – FREQUENTLY ASKED QUESTIONS

Why does the system not understand what I am saying?

- You are speaking too soon. When using the button of the steering wheel, wait for the tone before you speak.

Why does the system not understand the name of a track or artist?

- **Bluetooth®** does not support voice commands. Connect your device to a USB port.
- You are not saying the name exactly as it appears on your device. Say the name of the track or artist exactly as it appears on your device. Spell out any abbreviations in the name.
- The system does not recognize some special characters contained in the name of a song or artist, for example *, - or +. Rename the files on your device or use the touchscreen to select and play the track.

Ranger (TRA, TRB) Vehicles Built From: 01-11-2024, CG4010en enGBR, Edition date: 202407, DOM

Why does the system not understand the name of a contact in the phonebook on my device and calls the wrong contact?

- You are not saying the name exactly as it appears on your device. Say the first and last name of the contact exactly as it appears on your device. Spell out any abbreviations in the name.
- The name contains special characters, for example *, - or +. Rename the contact on your device or use the touchscreen to select and call the contact.

Why does the system not understand foreign names of contacts in the phonebook on my device?

- The system applies phonetic pronunciation rules of the selected language to the names of contacts in the phonebook on your device. Select the name of the contact on the touchscreen and use the Hear it option to get an idea of how the system expects you to pronounce it.

Why do the system voice prompts and the pronunciation of some words not seem accurate?

- The system uses text-to-speech technology and a synthetically generated voice rather than a pre-recorded human voice.

WHAT IS ALEXA BUILT-IN

Alexa Built-In allows you to use Alexa in your vehicle for auto-specific use cases on the road and gives you access to an ever-evolving number of skills that help to make your life more productive, entertaining, and connected while using your vehicle.

ALEXA BUILT-IN REQUIREMENTS

To use Alexa, all of the following must occur:

- Your vehicle modem is enabled.
- You are signed in to an existing Amazon account.
- Vehicle location services are enabled.
- Vehicle connectivity and vehicle data sharing is enabled.

Note: *Support and functionality may vary based on the country in which your FordPass account is registered.*

SIGNING IN TO YOUR ACCOUNT

Press the button in the status bar and follow the on-screen prompts.

To sign in using the settings menu:

1. From the settings menu, press Amazon Alexa. See **Center Display** (page 599).
2. Press Get Started.
3. Sign in to the Amazon account by either scanning the code or entering the on-screen code into the Amazon website.
4. Once logged in, follow the on-screen prompts.
5. When complete, the vehicle informs you that Alexa is ready to be used in the vehicle.

Signing Out of Your Account

1. From the settings menu, press Amazon Alexa. See **Center Display** (page 599).
2. Press Sign Out.

USING ALEXA BUILT-IN

To use Alexa, say “Alexa” or press the voice interaction button on the steering wheel and then say “Alexa” to invoke Alexa to start listening.

Note: *If the wake word is not enabled, you can only use the voice interaction button.*

You can use Alexa for the following and more:

- Entertainment.
- Hands-free calling.
- Traffic and navigation.
- Vehicle controls.
- Smart home device control.
- Weather and news information.

ALEXA BUILT-IN SETTINGS

Enabling the Wake Word

1. From the settings menu, press Amazon Alexa. See **Center Display** (page 599).
2. Switch Listen for Wake Word on or off.

Note: *If the wake word is not enabled, you can only use the voice interaction button.*

Contact List

Displays a list of connected phones and contact sharing status for each phone.

To change the contact sharing status:

1. From the settings menu, press Amazon Alexa. See **Center Display** (page 599).
2. Press Contact List.
3. Enable or disable sharing for each phone.

Note: *You can share contacts from more than one phone at a time.*

Things to Try

Learn more about what you can do with Alexa by browsing the things to try.

1. From the settings menu, press Amazon Alexa. See **Center Display** (page 599).
2. Press Things to Try.

Ranger (TRA, TRB) Vehicles Built From: 01-11-2024, CG4010en enGBR, Edition date: 202407, DOM

PHONE PRECAUTIONS

WARNING: Driving while distracted can result in loss of vehicle control, crash and injury. We strongly recommend that you use extreme caution when using any device that may take your focus off the road. Your primary responsibility is the safe operation of your vehicle. We recommend against the use of any hand-held device while driving and encourage the use of voice-operated systems when possible. Make sure you are aware of all applicable local laws that may affect the use of electronic devices while driving.

CONNECTING YOUR PHONE

Connecting your phone stores contact and call data on your vehicle.

Note: *Unpairing your phone removes the contact and call data from your vehicle.*

Go to the settings menu on your device and switch ***Bluetooth***® on.

1. From the settings menu, press Phone List. See **Center Display** (page 599).
2. Select Add Phone.
3. Follow the instructions on the touchscreen to pair your device.

PHONE MENU

Press to view your favorite contacts.

Press to view your recent calls.

Press to view your contacts

Press to use the phone keypad.

Press to display recent text messages.

Press to view recent emails.

Press the down arrow to view additional items for a connected device.

Press to begin a voice interaction.

Press to switch to a different connected device.

Press to mute notifications.

Press to access phone settings.

MAKING AND RECEIVING A PHONE CALL

Making Calls

To call a number in your contacts, select:

Menu Item	Action and Description
Contacts	You can then select the name of the contact you want to call. Any numbers stored for that contact display along with any stored contact photos. You can then select the number that you want to call. The system begins the call.

To call a number from your recent calls, select:

Menu Item	Action and Description
Recent Call list	You can then select an entry that you want to call. The system begins the call.

To call a number from your favorites, select:

Menu Item	Action and Description
Favourites	You can then select an entry that you want to call. The system begins the call.

To call a number that is not stored in your phone, select:

Menu Item	Action and Description
Phone Keypad	Select the digits of the number you wish to call.
Call	The system begins the call.

Pressing the backspace button deletes the last digit you typed.

Receiving Calls

During an incoming call, an audible tone sounds. Caller information appears in the display if it is available.

To accept the call, select:

Menu Item
Accept

Note: *You can also accept the call by pressing the phone button on the steering wheel.*

To reject the call, select:

Menu Item
Reject

Ignore the call by doing nothing. The system logs it as a missed call.

During a Phone Call

During a phone call, the contacts name and number display on the screen along with the call duration.

The phone status items are also visible:

- Signal Strength.
- Battery.

You can select any of the following during an active phone call:

Ranger (TRA, TRB) Vehicles Built From: 01-11-2024, CG4010en enGBR, Edition date: 202407, DOM

Item	
End call	Immediately end a phone call. You can also press the button on the steering wheel.
Keypad	Press this to access the phone keypad.

Item	
Mute	You can switch the microphone off so the caller does not hear you.
Hndsfree off	Transfer the phone call audio to the cell phone or back to the touchscreen.

SENDING AND RECEIVING A TEXT MESSAGE

Menu Item	Description
Hear it	Hear the text message.
View	View the text message.
Call	Call the sender.
Reply	Reply to the text message with a standard text message.

SWITCHING TEXT MESSAGE NOTIFICATION ON AND OFF

The settings on your device must be enabled to receive text message notifications on the center display. Check your device settings to enable these features.

ENABLING APPS ON A MOBILE DEVICE

When you start an app through the system for the first time, you could be asked to grant certain permissions. You can review and change the permissions that you have granted at any time when your vehicle is not moving. We recommend that you check your data plan before using your apps through the system. Using them could result in additional charges. We also recommend that you check the app provider's terms and conditions and privacy policy before using their app. Make sure that you have an active account for apps that you want to use through the system. Some apps work with no setup. Others require you to configure some personal settings before you can use them.

Enabling Apps on an iOS Device

1. Follow the instructions to pair and connect your device via ***Bluetooth***® or with a USB cable.

Note: *Some apps may run through Apple CarPlay if it is enabled.*

2. Start a compatible app on your device.

Note: *The app must be open on your device to use it through the touchscreen.*

3. Access the system applications.
4. Select the app you wish to use on the touchscreen.

Enabling Apps on an Android Device

1. Pair your device to ***Bluetooth***®.

Note: *Some apps may run through Android Auto if it is enabled.*

2. Start a compatible app on your device.

Note: *The app must be open on your device to use it through the touchscreen.*

3. Access the system applications.
4. Select the app you wish to use on the touchscreen.

SWITCHING APPLE CARPLAY ON AND OFF

1. Pair your device.
2. From the settings menu, press Phone List. See **Center Display** (page 599).
3. Select your device.
4. Tap the Apple CarPlay icon to switch Apple CarPlay on or off.

SWITCHING ANDROID AUTO™ ON AND OFF

1. Pair your device.
2. From the settings menu, press Phone List. See **Center Display** (page 599).
3. Select your device.
4. Tap the Android Auto icon to switch Android Auto on or off.

Ranger (TRA, TRB) Vehicles Built From: 01-11-2024, CG4010en enGBR, Edition date: 202407, DOM

CONNECTING A BLUETOOTH® DEVICE

1. From the settings menu, press Phone List. See **Center Display** (page 599).
2. Press Add Phone.

Note: *A prompt alerts you to search for your vehicle on your device.*

1. Select your vehicle on your device.

Note: *A number appears on your device and on the touchscreen.*

2. Confirm that the number on your device matches the number on the touchscreen.

Note: *The touchscreen indicates that you have successfully paired your device.*

The ***Bluetooth***® word mark and logos are registered trademarks owned by ***Bluetooth SIG, Inc.*** and any use of such marks by Ford Motor Company is under license. Other trademarks and trade names are those of their respective owners.

PLAYING MEDIA USING BLUETOOTH®

WARNING: Driving while distracted can result in loss of vehicle control, crash and injury. We strongly recommend that you use extreme caution when using any device that may take your focus off the road. Your primary responsibility is the safe operation of your vehicle. We recommend against the use of any hand-held device while driving and encourage the use of voice-operated systems when possible. Make sure you are aware of all applicable local laws that may affect the use of electronic devices while driving.

Connect your device.

Press App Launcher on the touchscreen. Press Media App. See **Center Display** (page 599).

Press the ***Bluetooth***® option.

Note: *If Bluetooth device was not the previous source.*

Press to play a track. Press again to pause the track.

Press to skip to the next track.

Press and hold to fast forward through the track.

Press once to return to the beginning of a track. Repeatedly press to return to previous tracks.

Press and hold to fast rewind through the track.

Browsing your Media Library

When a compatible mobile device is connected to the vehicle, your media library is accessible through the touchscreen. From the touchscreen, you can browse through songs, albums, artists, and playlists on your mobile device.

Note: *This feature is dependent on the connected mobile device and the media application used.*

Note: *Browse feature functionality may be limited while driving.*

ACCESSING NAVIGATION

1. Access the application drawer on the touchscreen.
2. Press the navigation button.

Note: *As the driver, be aware of all local traffic regulations and road attributes, and operate your vehicle in a safe and legal manner.*

NAVIGATION MAP UPDATES

Note: *If you find map data errors, you may report them by going to www.here.com/mapcreator.*

ADJUSTING THE MAP

ZOOMING THE MAP IN AND OUT

You can use pinch gestures to zoom in and out. Place two fingers on the screen and move them apart to zoom in. Place two fingers on the screen and bring them together to zoom out.

CHANGING THE FORMAT OF THE MAP

Press the map format button on the left side of the map screen to toggle between the available formats.

LIVE TRAFFIC

WHAT IS LIVE TRAFFIC

You can observe real-time road congestion when live traffic is on.

SWITCHING LIVE TRAFFIC ON AND OFF

1. Press the tools button on the map screen.
2. Press Navigation Settings.
3. Press the Traffic button.
4. Switch Traffic on or off.

SETTING A DESTINATION

SETTING A DESTINATION USING THE TEXT ENTRY SCREEN

1. Press search bar at the top of the screen.
2. Enter your destination using the keyboard.
3. Press the search button.
4. Select a destination from the list.
5. Follow the prompts on the screen to begin navigation.

SETTING A DESTINATION USING THE MAP SCREEN

Press on the map to trigger the roaming and viewing screen. Press on the map again to place a pin at that location. Information about the location of the pin appears on the screen. Press the Go! button to begin navigation to the pin.

SETTING A DESTINATION USING A RECENT DESTINATION

1. Press the search bar at the top of the screen.
2. Press the recents button.
3. Select a destination from the list.
4. Follow the prompts on the screen to begin navigation.

Ranger (TRA, TRB) Vehicles Built From: 01-11-2024, CG4010en enGBR, Edition date: 202407, DOM

SETTING A DESTINATION USING A SAVED DESTINATION

1. Press the search bar.
2. Press favorites.
3. Select a saved destination.

Note: *Press the star icon next when viewing location details to save the location.*

SETTING A DESTINATION USING A POINT OF INTEREST

Press on a point of interest icon on the map. Information about the location of the point of interest appears on the screen. Press the Go! button to begin navigation to the point of interest.

WAYPOINTS

ADDING A WAYPOINT

1. Begin navigation to a destination.
2. Search for your waypoint using the search bar.
3. Press Go!
4. Press Add to add the waypoint to your trip.

EDITING WAYPOINTS

1. Press the search bar on the map screen.
2. Press myTrips.
3. Press Current Trip.
4. Use the menu to add destinations, remove destinations, or rearrange destinations.

ROUTE GUIDANCE

ADJUSTING THE GUIDANCE PROMPT VOLUME

Turn the volume control when a guidance prompt plays to adjust the volume.

REPEATING AN INSTRUCTION

Press the turn indicator to hear the last voice instruction.

CANCELING ROUTE GUIDANCE

Press the button to cancel route guidance to the selected location.

TRAILER TOWING NAVIGATION

The system calculates the best route for trailer towing by avoiding dangerous road conditions based on the dimensions of your trailer.

Note: *This feature is only available if you properly attach the trailer to your vehicle.*

Switching Smart Trailer Navigation On and Off

1. Access the application drawer on the touchscreen.
2. Press navigation.
3. Press the navigation menu button.
4. Press settings.
5. Press guidance.
6. Press smart trailer navigation.
7. Switch towing route guidance ON or OFF.

Ranger (TRA, TRB) Vehicles Built From: 01-11-2024, CG4010en enGBR, Edition date: 202407, DOM

Entering Trailer Dimensions

1. Access the application drawer on the touchscreen.
2. Pres navigation.
3. Press the navigation menu button.
4. Press settings.
5. Press guidance.
6. Press smart trailer navigation.
7. Press active trailer.
8. Follow the screen instruction to select an active trailer or add a new one.

WHAT IS GEOFENCING

Geofencing is capable of automatically modifying the vehicle settings to help reduce emissions, based on the current location of your vehicle when driving through a low emission zone.

HOW DOES GEOFENCING WORK

Using the GPS coordinates, geofencing detects that your vehicle approaches a low emission zone and notifies you about access conditions.

When your vehicle enters a low emission zone, the system turns to an eco-friendly drive mode and notifies you about it in the instrument cluster display. While driving in the low emission zone, your vehicle uses electric-only mode as much as possible. When your vehicle exits the low emission zone, the system turns back to the original drive mode and notifies you about it in the instrument cluster display.

You can override the feature by selecting a different drive mode while driving in a low emission zone.

Note: *If you override the feature, your vehicle stays in the selected drive mode, even after exiting the low emission zone.*

Note: *This feature uses map data. We recommend having all connected vehicle settings enabled to allow the map content to be updated to the latest version. See* ***Connected Vehicle Settings*** *(page 591). If your market is not connected, take your vehicle to an authorized dealer to perform the periodic updates.*

GEOFENCING PRECAUTIONS

WARNING: Driving while distracted can result in loss of vehicle control, crash and injury. We strongly recommend that you use extreme caution when using any device that may take your focus off the road. Your primary responsibility is the safe operation of your vehicle. We recommend against the use of any hand-held device while driving and encourage the use of voice-operated systems when possible. Make sure you are aware of all applicable local laws that may affect the use of electronic devices while driving.

Note: *Geofencing uses the vehicle clock to define actual access conditions of a time restricted low emission zone. It is your responsibility to make sure the vehicle clock is correctly set.*

GEOFENCING LIMITATIONS

Geofencing can only override the following drive modes:

- Normal.
- Sport.

If your vehicle is in a different drive mode when entering a low emission zone, the system will not override it.

GEOFENCING INDICATORS

Geofencing Indicators

EV Now

Displays when your vehicle enters a low emission zone. In this mode your vehicle uses the high voltage battery only.

Ranger (TRA, TRB) Vehicles Built From: 01-11-2024, CG4010en enGBR, Edition date: 202407, DOM

ECO Mode

Displays when your vehicle enters a low emission zone. In this mode your vehicle helps maximize fuel efficiency and increases driving range. See **Eco** (page 339).

Both modes could result in reduced vehicle acceleration, top speed and climate control system performance to maximize the distance your vehicle can travel.

Geofencing Settings

Switching Drive Mode Change On and Off

1. Press ***Features*** on the touchscreen.
2. Press ***Driver Assistance***.
3. Press ***EV Zone Mode***.
4. Switch ***Drive Mode Change*** on or off.

Note: *If you switch **Drive Mode Change** off, your vehicle does not change drive modes when entering or exiting low emission zones.*

Switching Cluster Notification On and Off

1. Press ***Features*** on the touchscreen.
2. Press ***Driver Assistance***.
3. Press ***EV Zone Mode***.
4. Switch ***Cluster Notification*** on or off.

Note: *If you switch **Cluster Notification** off, your vehicle does not display notification pop-ups when approaching, entering or exiting low emission zones.*

Ranger (TRA, TRB) Vehicles Built From: 01-11-2024, CG4010en enGBR, Edition date: 202407, DOM

These software updates introduce new features or provide updates to vehicle software systems. To receive updates, we recommend you switch Automatic Updates on, set a recurring update schedule and connect your vehicle to Wi-Fi. Updates could take longer when not connected to Wi-Fi or could not download at all. See **Connecting the Vehicle to a Wi-Fi Network** (page 590).

Your vehicle may be able to receive drivable software updates, non-drivable software updates or both. Drivable software updates happen during normal vehicle usage. If Automatic Updates is switched on, updates happen without any input from you. If Automatic Updates is switched off, a software update icon displays on the touchscreen and customer acceptance is required.

Non-drivable software updates require you to input a scheduled start time. You are notified on your touchscreen and connected device prior to a non-drivable update.

Most updates complete in less than 30 minutes, although some updates could take up to a few hours.

You are notified of the software updates status on the top left part of the touchscreen and on your connected device. See **Software Update Indicators** (page 617).

Note: *Some updates may be delivered when automatic updates is on, while other updates are downloaded and you need to schedule or press update now.*

Vehicle Software Update Requirements

Non-drivable software updates do not install if any of the following occur:

- Your vehicle is running.
- Your vehicle is switched on.
- Your vehicle is not parked.
- The 12 V battery charge is too low.
- The hazard indicators are switched on.
- The alarm is sounding.
- The doors are open.
- The parking lamps are switched on.
- You are pressing the brake pedal.
- An emergency call is in process.
- Your vehicle is in limp home mode.

Vehicle Software Update Limitations

Once you begin a non-drivable software update, you cannot:

- Cancel the update.
- Enter your vehicle unless you have a key blade.
  - You can open the doors using the mechanical latch if child locks are not on.
- Use the remote control to lock, unlock or start your vehicle.
- Drive your vehicle.

SOFTWARE UPDATE SETTINGS

To access the Software Updates menu:

1. Press Settings.
2. Press Software Updates.

You can do the following in the Software Updates menu:

- Switch Automatic Updates on and off.
- Schedule and install software updates.
- View software update details.

Press the button next to a menu option for more information.

Ranger (TRA, TRB) Vehicles Built From: 01-11-2024, CG4010en enGBR, Edition date: 202407, DOM

Switching Automatic Updates On and Off

Your vehicle may comes with Automatic Updates switched on or off.

Switch Automatic Updates on. When Automatic Updates is set to on, you agree that software updates may be automatically delivered without any further notice or additional consent from you.

To make sure your vehicle always has the latest software, which could include security or other enhancements, we recommend switching Automatic Updates On.

Note: *Software updates require approval to download or install with Automatic Updates switched off.*

Scheduling and Installing Software Updates

Scheduling Software Updates

From the Software Updates menu:

1. Press Schedule Updates.
2. Selecting from a list of available timings or customizing gets auto saved.

Note: *Depending on your vehicle options some vehicles have the save option.*

The more days that updates are scheduled, the more frequently your vehicle installs new updates. We recommend selecting a time you normally do not need your vehicle.

Note: *The schedule you set is recurring. If Automatic Updates is on, every time a non-drivable update is available, it installs on this schedule unless you change it. You are notified on your touchscreen prior to a non-drivable update, with an option to reschedule it.*

Installing Software Updates

Using the Status Bar

1. Press the Software Update indicator on your touchscreen when it appears.
2. Follow the instructions on the touchscreen.

Using the Touchscreen

From the Software Updates menu:

1. Press Updates Details.
2. Press Update Now.

Viewing Software Update Details

From the Software Updates menu, press Update Details.

SOFTWARE UPDATE INDICATORS

You can press the indicators in the status bar when they appear for more information.

Vehicle software update reminder, schedule required, confirmation of default schedule required, or consent required.

Vehicle software update canceled, update not successful, or precondition not met.

Vehicle software update successful.

Ranger (TRA, TRB) Vehicles Built From: 01-11-2024, CG4010en enGBR, Edition date: 202407, DOM

PERFORMING A SYSTEM RESET

1. Press ***Settings*** on the touchscreen.
2. Press ***General***.
3. Press ***Reset***.

You can perform multiple resets from this menu.

Press the button next to a menu option for more information.

WHAT ARE THE AUXILIARY SWITCHES

The auxiliary switchboard on the overhead console makes aftermarket customization easier with six prewired switches connected to the power distribution box. Each circuit is individually fused for connection of electrical accessories. For more information on connecting accessories to the auxiliary switches, see your authorized dealer or refer to the Body and Equipment Mounting Manual (BEMM), if available.

For maximum vehicle performance, keep the following information in mind when adding accessories or equipment to your vehicle:

- When adding accessories, equipment, passengers and luggage to your vehicle, do not exceed the total weight capacity of the vehicle or of the front or rear axle (GVWR or GAWR as indicated on the safety compliance certification label). Ask an authorized dealer for specific weight information.
- It is your responsibility to ensure that any equipment you have fitted complies with applicable local legislation.
- An authorized dealer needs to install mobile communication systems. Improper installation may harm the operation of your vehicle, particularly if the manufacturer did not design the mobile communication system specifically for automotive use.
- If you or an authorized dealer add any electrical or electronic accessories or components not produced by us to your vehicle, you may adversely affect battery performance and durability. In addition, you may also adversely affect the performance of the other electrical systems in the vehicle.

LOCATING THE AUXILIARY SWITCHES

The switches are labeled AUX 1 through AUX 6.

The auxiliary switches only operate when the ignition is in the on or off position and the delay accessory is active, whether the engine is running or not

We recommend that you leave the engine running to maintain battery charge when using the switches for an extended time or when using higher current draw accessories.

When a switch is turned on, the indicator light on the switch illuminates and the circuit provides power to the device wired to that switch.

LOCATING THE AUXILIARY SWITCH WIRING

There are three sets of blunt-cut sealed circuits:

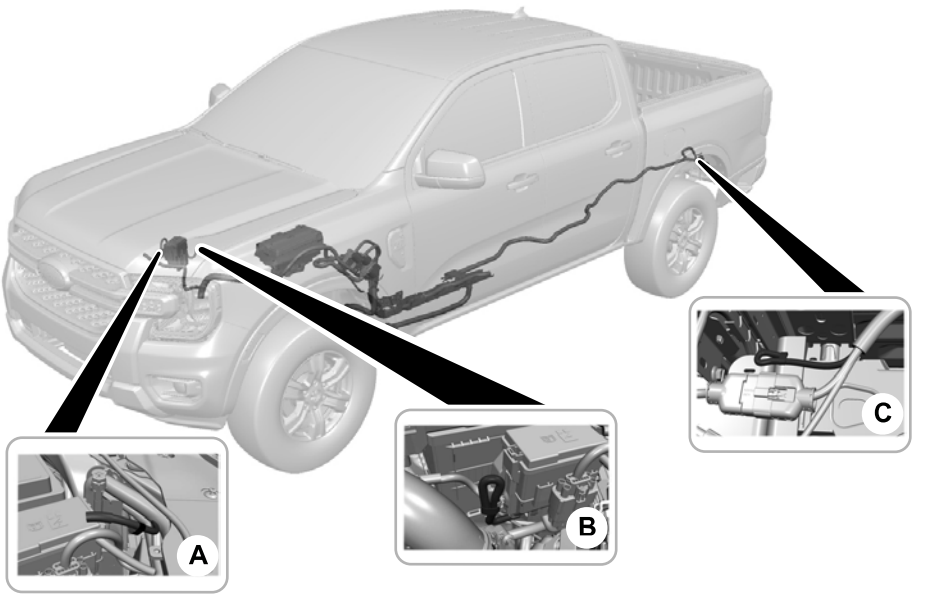

A	Circuit to radiator support.	Aux 6 Wire Location
B	Circuit near auxiliary fuse box.	Aux 1 Wire Location Aux 2 Wire Location Aux 5 Wire Location
C	Circuit to trailer hitch.	Aux 3 Wire Location Aux 4 Wire Location

Circuits from the under hood fuse box are powered. All other circuits are not connected at either end.

Additional information on fuse and relay locations is available. See your authorized dealer for service.

IDENTIFYING THE AUXILIARY SWITCH WIRING

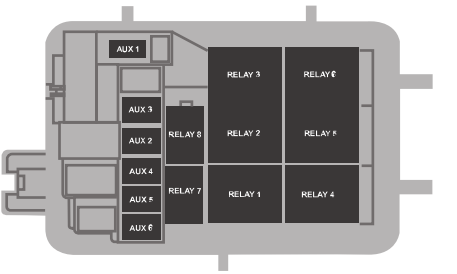

The relays are coded as follows:

Interior overhead console	Wire Color	Wire Size	Fuse	Protected Component	Blunt cut Wire Location
AUX 1	Violet/ Green	1.5 mm²	5A	Relay 1	Vehicle location B
AUX 2	Blue/ Orange	1.5 mm²	15A	Relay 2	Vehicle location B
AUX 3	Yellow/ Orange	1.5 mm²	15A	Relay 3	Vehicle location C
AUX 4	Brown	1.5 mm²	15A	Relay 4	Vehicle location C
AUX 5	Green/ Brown	2.5 mm²	25A	Relay 5 (Driving lamps)	Vehicle location B
AUX 6	Yellow	2.5 mm²	25A	Relay 6 (Driving lamps)	Vehicle location A

Protected Component	Purpose
Relay 7	Not used
Relay 8	Auxiliary switch power

Ground information:

Power Distribution Box	Wire Color	Wire Size	Location
AUX 3	Black/Grey	1.5 mm²	Vehicle location C
AUX 4	Black/Green	1.5 mm²	Vehicle location C
AUX 6	Black/Yellow	2.5 mm²	Vehicle location A

AUTHORIZED DEALER DIRECTORY

Name	Telephone	Address	City
GİZERLER	(322) 346 80 80	Levent Mah. Eski Ceyhan Yolu Üzeri 5. Km No: 210 Yüreğir/Adana	Adana
OTOKOÇ ADANA	(322) 441 17 17	Mersin Yolu Üzeri 9. Km Sarı Hamzalı Köyü Mevkii Merkez/Adana	Adana
İNTERTEKS	(416) 227 24 01	Adıyaman Gölbaşı Karayolu Üzeri Küçük Sanayi Sitesi Karşısı Merkez/Adıyaman	Adıyaman
GLS GELİŞİM OTOMOTİV	(382) 245 44 14	Bahçesaray Mahallesi 135. Cadde No: 216 Aksaray	Aksaray
BAŞER	(312) 269 80 00	Ayaş Yolu Çatalkara Sokak No:199 Sincan/Ankara	Ankara
KARTAŞ	(312) 583 85 60	Tevfik İleri Mh. Özal Bulvarı No: 55 Pursaklar/Ankara	Ankara
OTOKOÇ ANKARA	(312) 207 47 00	Eskişehir Yolu 12. Km No:350 Ümitköy/Ankara	Ankara
TAN OTO	(312) 591 34 34	Fatih Sultan Mehmet Bulvarı No:252 Macunköy,Yenimahalle/Ankara	Ankara
BİLALLER	(242) 259 33 70	Sarısu Mah. 121. Sk. No:30/A-B Konyaaltı/Antalya	Antalya
OTOKOÇ ALANYA	(242) 515 13 80	Çevreyolu Üzeri No: 1 Tosmur Beldesi Alanya/Antalya	Antalya
OTOKOÇ ANTALYA	(242) 340 26 85	Altınova Sinan Mah. Havaalanı Yolu Üzeri Merkez/Antalya	Antalya
KAHYAOĞULLARI	(256) 633 10 01	Söke Yolu Üzeri 3. Km Kuşadası/Aydın	Aydın
ZAFER	(256) 219 40 00	Aydın-İzmir Karayolu 1.Km (Aymas Bitişiği) Merkez/Aydın	Aydın
AKOTO EDREMİT	(266) 374 06 65	İzmir Yolu Üzeri 2. Km. Ilıcalar Mevkii Edremit/Balıkesir	Balıkesir

Name	Telephone	Address	City
AKOTO Merkez	(266) 283 00 10	İzmir Yolu 8. Km Osb Kavşağı Merkez/Balıkesir	Balıkesir
MUSLUBAŞLAR	(266) 721 21 21	600 Evler Mah. Ataturk Cad. No: 95 Bandırma/Balıkesir	Balıkesir
OĞUZCAN	(488) 218 02 23	Gültepe Mahallesi Demokrasi Bulvarı No: 401 Merkez/ Batman	Batman
OTOKOÇ BURSA	(224) 270 39 00	29 Ekim Mah. İzmir Yolu Cad. No: 380/A Nilüfer/Bursa	Bursa
SÖNMEZ KOÇ	(224) 261 22 44	Yeni Yalova Yolu 9. Km Sönmez Asf. Karşısı Merkez/ Bursa	Bursa
ARSLANLAR	(286) 263 06 25	İzmir Yolu 5. Km Merkez/ Çanakkale	Çanakkale
EVLÜCE OTO	(364) 235 02 12	Ankara Asfaltı 7. Km Merkez/ Çorum	Çorum
YARGÜL	(258) 371 23 79	Akçeşme Mevkii Menderes Bulvarı No: 161 Gümüşler/ Denizli	Denizli
DİYARBAKIR OTO	(412) 255 04 45	Şanlıurfa Yolu Üzeri 4 Km Merkez/Diyarbakır	Diyarbakır
GÖRÜR	(380) 537 53 15	Taşköprü Köyü E-5 Mahallesi No: 55 Düzce	Düzce
TUZCULAR	(284) 763 11 23	Ford Plaza İstanbul Yolu 7. Km Merkez/Edirne	Edirne
ÇETİNKAYALAR	(424) 247 40 31	Malatya Yolu 8. Km Baskil Yol Kavşağı Merkez/Elazığ	Elazığ
CİNDİLLİ OTOMOTİV	(442) 242 00 13	Tortum Yolu Üzeri 3. Km Cindilli Ford Plaza Erzurum	Erzurum
OTOKOÇ ESKİŞEHİR	(222) 335 10 10	Şirintepe Mh. İsmet İnönü 2. Cad. No: 64 Tepebaşı Merkez/ Eskişehir	Eskişehir
DOĞANLAR	(342) 323 23 13	Mücahitler Mahallesi Sani Konukoğlu Bulvarı No:28/A Şehitkamil/Gaziantep	Gaziantep

Your Authorized Dealer - Turkey

Name	Telephone	Address	City
OVALI ANTAKYA	(326) 221 61 65	İskenderun Yolu Üzeri 5. Km Antakya/Hatay	Hatay
OVALI İSKEN-DERUN	(326) 618 38 38	İsmet İnönü Mah.İbrahim Karaoğlanoğlu Cad.No: 38 Hatay/İskenderun	Hatay
SÜRKİT OTOM.	(476) 210 11 38	Söğütlü Mevkii Çevre Yolu Üzeri Ford Plaza Merkez/Iğdır	Iğdır
GÜRSOY	(232) 464 02 50	Merkez Mah. Gazi Mustafa Kemal Bulvari Blv. Gürsoy Oto. Gürsoy No: 872 Mezitli/Mersin	İçel
ASF	(216) 427 37 47	Soğanlik Yeni Mah. Soğanlik D-100 Kuzey Yanyol Cad. 30 B/Kartal/İstanbul	İstanbul
ATILGAN SANC-AKTEPE	(216) 498 98 00	Veysel Karani Mahallesi, Aşık Reyhani Caddesi No: 14 Sanc-aktepe/İstanbul	İstanbul
AYDOĞANLAR	(212) 665 84 84	Yenibosna Merkez Mah. Kavak Sokak Ser Plaza No: 3/1-2, Bodrum Kat Bahçelievler/ İstanbul	İstanbul
ÇETAŞ B.ÇEKMECE	(212) 863 84 10	Mimarsinan Merkez Mah.E-5 Londra Asfaltı No: 57 B. Çekmece İstanbul	İstanbul
ÇETAŞ MAHMUTBEY	(212) 454 40 00	Göztepe Mah. Rahim Sok. No: 2-4 Bağcılar/İstanbul	İstanbul
GÜRBAŞLAR	(216) 465 33 61	Göztepe Mah. Atatürk Cad. No: 12 Migros karşısı A.Hisarı/ İstanbul	İstanbul
KAR OTOMOTİV	(212) 612 49 49	Defterdar Mah. Fethi Çelebi Cad. No: 23/1 Eyüp/İstanbul	İstanbul
KELEŞLER	(212) 417 39 15	Uluyol Cad. No: 25/A Bayrampaşa/İstanbul	İstanbul
KENT OTOMOTİV	(212) 423 53 00	Saadetdere Mah. 68. Sok. No: 40 Esenyurt/İstanbul	İstanbul
OTOKOÇ İSTANBUL İSTİNYE	(212) 229 95 55	İstinye Mah. Sarıyer Cad. No: 70/C Yeniköy/İstanbul	İstanbul

Name	Telephone	Address	City
OTOKOÇ İSTANBUL ATAŞEHİR	(216) 574 38 32	Kayışdağı Cd. No: 3 Flora Plaza Küçükbakkalköy, Ataşehir/İstanbul	İstanbul
OTOKOÇ İSTANBUL TAŞDELEN	(216) 430 12 00	Çamlık Mah. Çobandere Mevkii Sırrı Çelik Bulvarı No: 9A/9B, Şile Otobanı 11. Km Taşdelen, Çekmeköy/İstanbul	İstanbul
TEPRETOĞULLARI	(216) 545 03 33	Acıbadem Mah Köftüncü Sokak No: 1/3 Kadıköy/ İstanbul	İstanbul
ARKAS İZMİR	(232) 399 34 34	Anadolu Cad. No: 687/C Karsıyaka/Izmır Karşıyaka/ İzmir	İzmir
ÇETAŞ İZMİR	(232) 478 07 07	Ankara Cad. Naldöken Mah. No: 319 Bornova/İzmir	İzmir
İZKAR	(232) 254 38 00	Akçay Cad. No: 49 Gaziemir/ İzmir	İzmir
OTOKOÇ İZMİR	(232) 498 90 00	Kazım Dirik Mah. 296. Sokak No: 1 Bornova/İzmir	İzmir
METİNLER	(352) 224 54 54	Konaklar Mevkii Sivas Cad. No: 244 Kayseri	Kayseri
ÜNAL	(352) 311 55 00	Anbar Mahallesi Osman Kavuncu Bulvarı No: 498 Anbar, Melikgazi/Kayseri	Kayseri
ÇANGAR	(392) 227 05 55	Soyak Evleri Mevkii, Küçükkaymaklı Mah. Şehit Mustafa Ruso Cad. Lefkoşe/ Kıbrıs	Kıbrıs
ACAMAR	(262) 606 10 10	Köşklü Çeşme Mah. İstanbul Cad. No:87 41400 Gebze/ Kocaeli	Kocaeli
ESOTO	(262) 335 43 15	Sanayi Mah. D-130 Yanyol Cad. No: 79 Merkez/Kocaeli	Kocaeli
OTOKOÇ KONYA	(332) 255 42 33	İstanbul Yolu Üzeri Sancak Mah. Büyükırmak Sk. No:1 Selçuklu Merkez/Konya	Konya

Your Authorized Dealer - Turkey

Name	Telephone	Address	City
ILICAK	(422) 444 59 55	1.OSB Mahallesi Havaalanı Yolu 2.Cadde No: 14/1 Yeşilyurt/MALATYA	Malatya
ÇETAŞ MANİSA	(236) 233 84 00	Güzelyurt Mah. Menemen Cad. No:15/A Manisa	Manisa
ÇETAŞ SALİHLİ	(236) 716 16 00	Ankara Asfaltı 3. km. Salihli/ Manisa	Manisa
NAS OTO	(482) 312 04 44	Havaalanı Yanı 47100 Merkez/ Mardin	Mardin
HELVACIOĞLU BODRUM	(252) 358 68 38	Açık Kırlar Mevkii Atatürk Bulvarı No: 289 Konacık, Bodrum/Muğla	Muğla
HELVACIOĞLU FETHİYE	(252) 646 57 77	Karaçulha Belediyesi Cumhuriyet Cad. No: 199 Fethiye/Muğla	Muğla
HELVACIOĞLU Merkez	(252) 212 80 00	Orhaniye Mah. Uğur Mumcu Bulvarı No: 17 Merkez/Muğla	Muğla
ALTAŞ	(452) 234 19 20	Cumhuriyet Mah. Mustafa Kemal Bulvarı No: 102 Merkez/ Ordu	Ordu
ATILGAN RİZE	(464) 226 01 85	Cumhuriyet Çay Fabrikası Karşısı Gündoğdu Rize	Rize
AKGÜN	(264) 276 72 10	Hanlıköy Mahallesi Eskişehir Caddesi No: 93/A Arifiye/ Sakarya	Sakarya
OTOKOÇ SAMSUN	(362) 266 61 12	Samsun-Trabzon Karayolu 10. Km Kutlukent Tekkeköy/ Samsun	Samsun
KURT	(346) 502 58 58	Yeşilyurt Mah. Sultanşehir Blv. 146 Merkez/Sivas	Sivas
ŞANLIURFA OTO	(414) 316 62 27	Mardin Yolu 3.Km Jandarma Karşısı Merkez/Şanlıurfa	Şanlıurfa
DÖNÜŞÜM	(486) 616 76 16	Nusaybin Yolu Üzeri Cizre Çıkışı 8. Km Habur Tesisleri Yanı Nerme Mevkii Çavuşlu Köyü, Cizre/Şırnak	Şırnak

Name	Telephone	Address	City
VOLKAN Çorlu	(282) 685 42 90	E-5 Karayolu Üzeri Önerler Mevkii Mücavir Mah. İstanbul Cad. 43/A, Çorlu/Tekirdağ	Tekirdağ
VOLKAN Tekirdağ	(282) 293 38 82	Hürriyet Mah. Sami Efendi Sok. No:2 Süleymanpaşa/ Tekirdağ	Tekirdağ
ORUÇLAR	(356) 214 41 43	Yeniyurt Mah. Vali Zekai Gümüşdiş Blv. No: 55/A Tokat	Tokat
TUNALAR	(462) 248 12 00	Tunalar Ford Plaza Yıldızlı/ Trabzon	Trabzon
AKKÖPRÜLÜ	(434) 217 17 17	Şabaniye Mah. İpekyolu 4. Km Merkez/Van	Van
ERDEĞER	(226) 351 73 50	Kılıç Köyü Şakşak Mevkii Çiftlikköy/Yalova	Yalova
AZİM OTO	(372) 323 98 40	Muammer Aksoy Cad. No: 38 Karadeniz Ereğli/Zonguldak	Zonguldak

SERVICE INTERVALS

Model	Service Interval (Whichever Occurs First)	
• All passenger cars. • Ranger • Tourneo Connect. • Tourneo Courier. • Transit Connect. • Transit Courier.	1 year	15,000 km (9,500 mi)
• Tourneo Custom. • Transit. • Transit Custom.	1 year	20,000 km (12,500 mi)

Note: *Service intervals may vary depending on engine options. For information about the service interval details of your vehicle, please refer to the local Ford website.*

ROLLOVER WARNING

WARNING: Utility vehicles have a significantly higher rollover rate than other types of vehicles.

WARNING: Vehicles with a higher center of gravity (utility and four-wheel drive vehicles) handle differently than vehicles with a lower center of gravity (passenger cars). Avoid sharp turns, excessive speed and abrupt steering in these vehicles. Failure to drive cautiously increases the risk of losing control of your vehicle, vehicle rollover, personal injury and death.

WARNING: In a rollover crash, an unbelted person is significantly more likely to die than a person wearing a seatbelt.

WARNING: Do not become overconfident in the ability of four-wheel drive vehicles. Although a four-wheel drive vehicle may accelerate better than a two-wheel drive vehicle in low traction situations, it won't stop any faster than two-wheel drive vehicles. Always drive at a safe speed.

Utility vehicles and trucks handle differently than passenger cars in the various driving conditions that are encountered on streets, highways and off-road. Utility vehicles and trucks are not designed for cornering at speeds as high as passenger cars any more than low-slung sports cars are designed to perform satisfactorily under off-road conditions.

THIRD PARTY SOFTWARE COPYRIGHT ACKNOWLEDGMENT

Your vehicle could have components that use open source software. For additional information, visit *http://corporate.ford.com/ford-open-source.html*.

DECLARATION OF CONFORMITY

Your vehicle could have components that transmit and receive radio waves and are therefore subject to government regulation.

These components must accept any interference received, including interference that could cause undesired operation. For certification labels and declarations of conformity, visit *www.wirelessconformity.ford.com*.

REACH

We are committed to promoting the responsible manufacturing, handling and use of our products and support the underlying goals of ***REACH***, a European Union regulation that concerns the registration, evaluation, authorisation and restriction of chemicals.

We specifically support Regulation EC 1907/2006 Article 33(1) that relates to substances of very high concern which appear on the current list for authorisation.

If these substances do exist in a product, it is important to guarantee their safe use so the regulation is designed to enable you to take any appropriate risk management measures.

To find out more about the ***REACH*** directive, search ***REACH*** on the local Ford website.

Note: *To find the local Ford website, visit https://corporate.ford.com/operations/locations/global-links.html.*

RADIO FREQUENCY CERTIFICATION LABELS

AUDIO UNIT

Device	Supplier	Type Designation
Audio Head Unit	Visteon	AHUD001

European Union EU

CE

Jamaica

This product has been Type Approved by Jamaica: SMA - AHUD001.

Mexico

NOM NYCE

Serbia

И005 24

South Korea

R-R-VC1-AHUD001

Ukraine

United Arab Emirates (U.A.E.)

United Kingdom

United States and Canada

This equipment generates, uses, and can radiate radio frequency energy and may cause harmful interference to radio communications. There is no guarantee that interference will not occur in a particular installation. If this equipment does cause harmful interference to radio or television reception, please consult the dealer.

This product is not end-user serviceable.

RF Radiation Exposure Statement: This equipment complies with FCC RF Radiation exposure limits set forth for an uncontrolled environment. This device and its antenna must not be co-located or operating in conjunction with any other antenna or transmitter. This equipment should be installed and operated with a minimum distance of 20cm between the radiator and your body.

This device complies with Part 15 of the FCC Rules and with Innovation, Science and Economic Development Canada's licence-exempt RSS(s). Operation is subject to the following two conditions:

1. This device may not cause harmful interference, and
2. This device must accept any interference received, including interference that may cause undesired operation.

Le présent appareil est conforme aux CNR d'Industrie Canada applicables aux appareils radio exempts de licence. L'exploitation est autorisée aux deux conditions suivantes:

1. *L'appareil ne doit pas produire debrouillage;*
2. *L'appareil doit accepter tout brouillage radioélectrique subi, même si le brouillage est susceptible d'en compromettre le fonctionnement.*

AUDIO UNIT

Device	Supplier	Type Designation
Audio Head Unit	Visteon	AHUE001

European Union EU

CE

Moldova

Serbia

Ukraine

South Africa

United Kingdom

United States and Canada

This equipment generates, uses, and can radiate radio frequency energy and may cause harmful interference to radio communications. There is no guarantee that interference will not occur in a particular installation. If this equipment does cause harmful interference to radio or television reception, please consult the dealer.

This product is not end-user serviceable.

RF Radiation Exposure Statement: This equipment complies with FCC RF Radiation exposure limits set forth for an uncontrolled environment. This device and its antenna must not be co-located or operating in conjunction with any other antenna or transmitter. This equipment should be installed and operated with a minimum distance of 20cm between the radiator and your body.

This device complies with Part 15 of the FCC Rules and with Innovation, Science and Economic Development Canada's licence-exempt RSS(s). Operation is subject to the following two conditions:

1. This device may not cause harmful interference, and
2. This device must accept any interference received, including interference that may cause undesired operation.

Le présent appareil est conforme aux CNR d'Industrie Canada applicables aux appareils radio exempts de licence. L'exploitation est autorisée aux deux conditions suivantes:

1. *L'appareil ne doit pas produire debrouillage;*
2. *L'appareil doit accepter tout brouillage radioélectrique subi, même si le brouillage est susceptible d'en compromettre le fonctionnement.*

BLIND SPOT INFORMATION SYSTEM SENSORS

Device	Supplier	Type Designation
SRR5 BLIS Corner Radar (RRU2)	Aptiv	2F5TR

Argentina

H-28070

Brazil

15375-23-12270

China

CMIIT ID: 2023LJ10407

Djibouti

AGREE PAR LE MCPT (REPUBLIQUE DE DJIBOUTI)

Numéro d'agrément:

040/DDTIC/2024

Date d'agrément:

16/04/2024

Europe Union EU

CE

Ghana

NCA APPROVED: 7E6-M0-XDF-TME

Indonesia

Sertifikat Nomor: 98785/SDPPI/2024
PLG ID: 13493

Jamaica

This product has been Type Approved by Jamaica: SMA - 2F5TR.

Mauritania

AGREE PAR L'ANE MAURITANIE

Numéro d'agrément:

1222/ARE/2023

Date d'agrément:

06/02/2023

Mexico

IFT: ROAP2F23-27117

Morocco

AGREE PAR L'ANRT MAROC
Numéro d'agrément:
MR00036523ANRT2023
Date d'agrément:
30/01/23

Paraguay

NR: 2022-04-I-0255

South Africa

TA-2022/3721
ICASA
APPROVED

South Korea

R-C-1Ap-2F5TR

Taiwan

CCAI23LP0640T2

United Arab Emirates (U.A.E.)

TDRA

ER10085/22
United Arab Emirates

United Kingdom

UK CA

United States and Canada

FCC ID: L2C2F5TR
IC: 3432A-2F5TR

This equipment generates, uses, and can radiate radio frequency energy and may cause harmful interference to radio communications. There is no guarantee that interference will not occur in a particular installation. If this equipment does cause harmful interference to radio or television reception, please consult the dealer.

This product is not end-user serviceable.

RF Radiation Exposure Statement: This equipment complies with FCC RF Radiation exposure limits set forth for an uncontrolled environment. This device and its antenna must not be co-located or operating in conjunction with any other antenna or transmitter. This equipment should be installed and operated with a minimum distance of 20cm between the radiator and your body.

This device complies with Part 15 of the FCC Rules and with Innovation, Science and Economic Development Canada's licence-exempt RSS(s). Operation is subject to the following two conditions:

1. This device may not cause harmful interference, and
2. This device must accept any interference received, including interference that may cause undesired operation.

Le présent appareil est conforme aux CNR d'Industrie Canada applicables aux appareils radio exempts de licence. L'exploitation est autorisée aux deux conditions suivantes:

1. *L'appareil ne doit pas produire debrouillage;*
2. *L'appareil doit accepter tout brouillage radioélectrique subi, même si le brouillage est susceptible d'en compromettre le fonctionnement.*

BLIND SPOT INFORMATION SYSTEM SENSORS

Device	Supplier	Type Designation
SRR5 BLIS Corner Radar	Aptiv	F5TR

Argentina

CNC COMISIÓN NACIONAL DE COMUNICACIONES

CNC ID: H-24708

Brazil

ANATEL
Agência Nacional de Telecomunicações
17075-21-12270

China

CMIIT ID: 2022LP14250

Djibouti

AGREE PAR LE MCPT (REPUBLIQUE DE DJIBOUTI)
Numéro d'agrément : 195/MCPT/DDTIC
Date d'agrément : 06/09/2021

Europe Union EU

CE

Ghana

NCA APPROVED: SRO-1M-7E4-X0E

Mauritania

AGREE PAR L'ANE MAURITANIE
Numéro d'agrément : 0985/ARE/2021
Date d'agrément : 24/08/2021

Indonesia

Sertifikat Nomor: 90715/SDPPI/2023
PLG ID: 13493

Mexico

IFETEL: RCPAPF520-0480

Morocco

AGREE PAR L'ANRT MAROC
Numéro d'agrément : MR00030033ANRT2021
Date d'agrément : 16/09/2021

Jamaica

This product has been Type Approved by Jamaica: SMA – F5TR.

Paraguay

CONATEL

NR: 2020-10-I-0753

Singapore

Complies with IMDA Standards

DA 00461

South Africa

TA-2021/2119
ICASA
APPROVED

South Korea

R-C-1Ap-F5TR

Taiwan

CCAI20LP1990T7

Thailand

(1)เครื่องโทรคมนาคมและอุปกรณ์นี้ มีความสอดคล้องตามข้อกำหนดของ กทช.

(2)เครื่องวิทยุคมนาคมนี้ระยับการแผ่คลื่นแม่เหล็กไฟฟ้าสอดคล้องตามมาตรฐานความปลอดภัยต่อสุขภาพของมนุษย์จากการใช้เครื่องวิทยุคมนาคมที่คณะกรรมการกิจการโทรคมนาคมแห่งชาติประกาศกำหนด

Ukraine

UA.TR.028

United Arab Emirates (U.A.E.)

TDRA

ER19231/23
United Arab Emirates

United Kingdom

UKCA

United States and Canada

FCC ID: L2CF5TR
IC: 3432A-F5TR

This device complies with Part 15 of the FCC Rules and with Innovation, Science and Economic Development Canada's licence-exempt RSS(s). Operation is subject to the following two conditions:

1. This device may not cause harmful interference, and
2. This device must accept any interference received, including interference that may cause undesired operation.

L'émetteur/récepteur exempt de licence contenu dans le présent appareil est conforme aux CNR d'Innovation, Sciences et Développement économique Canada applicables aux appareils radio exempts de licence. L'exploitation est autorisée aux deux conditions suivantes:

1. L'appareil ne doit pas produire de brouillage;
2. L'appareil doit accepter tout brouillage radioélectrique subi, même si le brouillage est susceptible d'en compromettre le fonctionnement.

Note: Changes or modifications not expressly approved by the party responsible for compliance could void the user's authority to operate the equipment.

Nota: Tout changement apporté au dispositif sans l'approbation expresse des autorités compétentes pourrait révoquer le droit de l'utilisateur d'en faire usage.

Vietnam

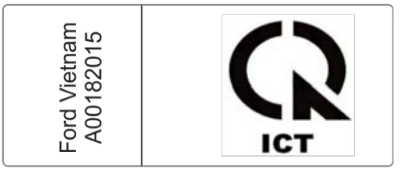

BODY CONTROL MODULE

Device	Supplier	Type Designation
BCM GEN1M	Continental	M3NA2C766336

Argentina

CNC COMISIÓN NACIONAL DE COMUNICACIONES

CNC ID: H-23804

Jamaica

This product has been Type Approved by Jamaica: SMA - M3NA2C766336.

Brazil

ANATEL
Agência Nacional de Telecomunicações
08346-19-05297

Moldova

024

Ghana

NCA PRODUCT IDENTIFIER: ZRO-M8-7E3-281

Morocco

AGREE PAR L'ANRT MAROC
Numéro d'agrément: MR 20148 ANRT 2019
Date d'agrément: 19/06/2019

Paraguay

2019-01-I-000076

Serbia

Singapore

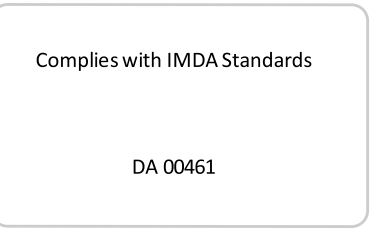

South Africa

Ukraine

United Arab Emirates (U.A.E.)

United Kingdom

UKCA

United States and Canada

WARNING: Changes or modifications not expressively approved by the party responsible for compliance could void the user's authority to operate the equipment. The term "IC:" before the radio certification number only signifies that Industry Canada technical specifications were met.

FCC ID: M3NA2C766336

IC: 7812A-A2C766336

This device complies with Part 15 of the FCC Rules and with Innovation, Science and Economic Development Canada's licence-exempt RSS(s). Operation is subject to the following two conditions:

1. This device may not cause harmful interference, and
2. This device must accept any interference received, including interference that may cause undesired operation.

Vietnam

Zambia

ZICTA
ZMB/ZICTA/TA/2019/7/103

CRUISE CONTROL MODULE

Device	Supplier	Type Designation
MRR3 Medium Range Radar	Aptiv	F3TR

Argentina

CNC COMISIÓN NACIONAL DE COMUNICACIONES
CNC ID: H-24707

Djibouti

AGREE PAR LE MCPT (REPUBLIQUE DE DJIBOUTI)
Numéro d'agrément : 059/DDTIC/2020
Date d'agrément : 01/10/2020

Brazil

ANATEL
Agência Nacional de Telecomunicações
15830-21-12270

EAC Marking - Russia, Belarus, Kazakhstan

EAC

Europe Union EU

CE

Ghana

NCA APPROVED: SRO-1M-7E4-X13

Independent State Of Samoa

SMO
Samoa

Indonesia

Sertifikat Nomor: 90714/SDPPI/2023
PLG ID: 13493

Israel

1. מספר אישור התאמה סטנדרטי משרד התקשורת: 51-82320
2. חל איסור לבצע פעולות במכשיר שיש בהן כדי לשנות את תכונותיו האלחוטיות של המכשיר, ובכלל זה שינויי תוכנה, התלפת אנטנה מקורית או הוספת אפשרות לחיבור לאנטנה חיצונית, בלא קבלת אישור משרד התקשורת, בשל החשש להפרעות אלחוטיות.

Jamaica

This product has been Type Approved by Jamaica: SMA – F3TR.

Malaysia

HIDF16000009

Mauritania

AGREE PAR L'ANE MAURITANIE
Numéro d'agrément : 0835/ARE/2020
Date d'agrément : 31/08/2020

Mexico

IFT: RCPAPF320-0479

Moldova

Morocco

AGREE PAR L'ANRT MAROC

Numéro d'agrément:
MR00030034ANRT2021

Date d'agrément: 16/09/2021

Pakistan

Paraguay

NR: 2020-10-I-0752

Sierra Leone

TAN: 2021-002-0028

Singapore

Complies with IMDA Standards

DA 00461

South Africa

TA-2021/2321

South Korea

R-C-1Ap-F3TR

Taiwan

CCAI20LP1150T2

Thailand

(1)เครื่องโทรคมนาคมและอุปกรณ์นี้ มีความสอดคล้องตามข้อกำหนดของ กทช.

(2)เครื่องวิทยุคมนาคมนี้ระดับการแผ่คลื่นแม่เหล็กไฟฟ้าสอดคล้องตามมาตรฐานความปลอดภัยต่อสุขภาพของมนุษย์จากการใช้เครื่องวิทยุคมนาคมที่คณะกรรมการกิจการโทรคมนาคมแห่งชาติประกาศกำหนด

Ukraine

UA.TR.028

Unites Arab Emirates (U.A.E.)

TDRA

ER19344/23
United Arab Emirates

United Kingdom

UK CA

United States and Canada

FCC ID: L2CF3TR

IC: 3432A-F3TR

This device complies with Part 15 of the FCC Rules and with Innovation, Science and Economic Development Canada's licence-exempt RSS(s). Operation is subject to the following two conditions:

1. This device may not cause harmful interference, and
2. This device must accept any interference received, including interference that may cause undesired operation.

L'émetteur/récepteur exempt de licence contenu dans le présent appareil est conforme aux CNR d'Innovation, Sciences et Développement économique Canada applicables aux appareils radio exempts de licence. L'exploitation est autorisée aux deux conditions suivantes:

1. L'appareil ne doit pas produire de brouillage;
2. L'appareil doit accepter tout brouillage radioélectrique subi, même si le brouillage est susceptible d'en compromettre le fonctionnement.

Note: Changes or modifications not expressly approved by the party responsible for compliance could void the user's authority to operate the equipment.

Nota: Tout changement apporté au dispositif sans l'approbation expresse des autorités compétentes pourrait révoquer le droit de l'utilisateur d'en faire usage.

Zambia

INTEGRATED KEYHEAD TRANSMITTER

Device	Supplier	Type Designation
Integrated Keyhead Transmitter (IKT)	Valeo	A08TAA

Argentina

H-25217

H-25217

Brazil

Jamaica

This product has been Type Approved by Jamaica: SMA – N5F-A08TAA

Paraguay

NR: 2018-07-I-000317

NR: 2023-08-I-0539

Taiwan

Four-button

CCAB14LP5630T2

Three-button

CCAB14LP563AT4

United States and Canada

FCC ID: N5F-A08TAA

IC ID: 3248A-A08TAA

This device complies with Part 15 of the FCC Rules and with Innovation, Science and Economic Development Canada's licence-exempt RSS(s). Operation is subject to the following two conditions:

1. This device may not cause harmful interference, and
2. This device must accept any interference received, including interference that may cause undesired operation.

L'émetteur/récepteur exempt de licence contenu dans le présent appareil est conforme aux CNR d'Innovation, Sciences et Développement économique Canada applicables aux appareils radio exempts de licence. L'exploitation est autorisée aux deux conditions suivantes:

1. L'appareil ne doit pas produire de brouillage;
2. L'appareil doit accepter tout brouillage radioélectrique subi, même si le brouillage est susceptible d'en compromettre le fonctionnement.

Note: Changes or modifications not expressly approved by the party responsible for compliance could void the user's authority to operate the equipment.

Nota: Tout changement apporté au dispositif sans l'approbation expresse des autorités compétentes pourrait révoquer le droit de l'utilisateur d'en faire usage.

INTEGRATED KEYHEAD TRANSMITTER

Device	Supplier	Type Designation
Integrated Keyhead Transmitter (IKT)	Valeo	A08TBB

Argentina H-13305

RAMATEL

CNC COMISIÓN NACIONAL DE COMUNICACIONES

CNC ID: H-13305

Democratic Republic of Congo

Agréé par l'ARPTC

Nº d'homologation: HIR - 00135/2014

Date d'homologation: 29/01/2015

Djibouti

AGREE PAR LE MCPT (REPUBLIQUE DE DJIBOUTI)

Numéro d'agrément:

127/DDTIC/2021

Date d'agrément:

07/09/2021

Indonesia

Sertifikat Nomor: 90413/SDPPI/2023
PLG ID: 13493

Israel

51-96885 .1 מספר אישור התאמה מטעם משרד התקשורת:
.2 חל איסור לבצע פעולות במכשיר שיש בהן כדי לשנות את תכונותיו האלחוטיות של המכשיר, ובכלל זה שינויי תוכנה, התלפת אנטנה מקורית או הוספת אפשרות לחיבור לאנטנה חיצונית, בלא קבלת אישור משרד התקשורת, בשל החשש להפרעות אלחוטיות.

Malaysia

MCMC

HIDF16000009

Mauritania

AGREE PAR L'ANE MAURITANIE

Numéro d'agrément: 0858/ARE/2020

Date d'agrément: 02/11/2020

Mexico

NOM NYCE

IFT: RLVVAA017-0749

Moldova

Morocco

AGREE PAR L'ANRT MAROC
Numéro d'agrément:
MR 00041096 ANRT 2023
Date d'agrément:
25/12/2023

Pakistan

Paraguay

NR: 2017-10-I-0334
NR: 2022-60-I-0397

Serbia

South Africa

E272859

Taiwan

CCAB17LP1990T0

Thailand

(1)เครื่องโทรคมนาคมและอุปกรณ์นี้ มีความสอดคล้องตามข้อกำหนดของ กทช.

(2)เครื่องวิทยุคมนาคมนี้ระดับการแผ่คลื่นแม่เหล็กไฟฟ้าสอดคล้องตามมาตรฐานความปลอดภัยต่อสุขภาพของมนุษย์จากการใช้เครื่องวิทยุคมนาคมที่คณะกรรมการกิจการโทรคมนาคมแห่งชาติประกาศกำหนด

Ukraine

UA.TR.028

United Arab Emirates (U.A.E)

TDRA

ER49357/16
United Arab Emirates

Vietnam

Zambia

E272868

INTEGRATED KEYHEAD TRANSMITTER

Device	Supplier	Type Designation
Integrated Keyhead Transmitter (IKT)	Valeo	A08TDB

Argentina

H-25218

Jamaica

This product has been Type Approved by Jamaica: SMA – NF5-A08TDA

United States and Canada

FCC ID: N5F-A08TDA

IC ID: 3248A-A08TDA

This device complies with Part 15 of the FCC Rules and with Innovation, Science and Economic Development Canada's licence-exempt RSS(s). Operation is subject to the following two conditions:

1. This device may not cause harmful interference, and
2. This device must accept any interference received, including interference that may cause undesired operation.

L'émetteur/récepteur exempt de licence contenu dans le présent appareil est conforme aux CNR d'Innovation, Sciences et Développement économique Canada applicables aux appareils radio exempts de licence. L'exploitation est autorisée aux deux conditions suivantes:

1. L'appareil ne doit pas produire de brouillage;
2. L'appareil doit accepter tout brouillage radioélectrique subi, même si le brouillage est susceptible d'en compromettre le fonctionnement.

Note: Changes or modifications not expressly approved by the party responsible for compliance could void the user's authority to operate the equipment.

Nota: Tout changement apporté au dispositif sans l'approbation expresse des autorités compétentes pourrait révoquer le droit de l'utilisateur d'en faire usage.

PASSIVE ANTI-THEFT SYSTEM

Device	Supplier	Type Designation
Intrusion Transceiver Module	Omron/Nidec	OUC26006559

Argentina

Brazil

ANATEL
Agência Nacional de Telecomunicações
03485-18-03199

Ghana

NCA APPROVED: 1R3-1M-7E1-115

Europe

CE

UK CA

Israel

1. מספר אישור התאמה סוגעם משרד התקשורת: 51-63481
2. חל איסור לבצע פעולות במכשיר שיש בהן כדי לשנות את תכונותיו האלחוטיות של המכשיר, ובכלל זה שינוי תוכנה, החלפת אנטנה מקורית או הוספת אפשרות לחיבור לאנטנה חיצונית, בלא קבלת אישור משרד התקשורת, כשל החשש להפרעות אלחוטיות.

Jamaica

This product has been Type Approved by Jamaica:
SMA - OUC26006559.

Moldova

Morocco

AGREE PAR L'ANRT MAROC
Numéro d'agrément : MR 14721 ANRT 2017
Date d'agrément : 12/09/2017

Paraguay

NR: 2018-04-I-000175

Serbia

Singapore

Complies with IMDA Standards

N0650-18

South Africa

South Korea

MSIP- R-RMM-OAC-OUC26006559

Taiwan

Ukraine

United Arab Emirates (U.A.E.)

United States of America and Canada

WARNING: Changes or modifications not expressively approved by the party responsible for compliance could void the user's authority to operate the equipment. The term "IC:" before the radio certification number only signifies that Industry Canada technical specifications were met.

FCC ID: OUC26006559

IC: 850K-26006559

This device complies with Part 15 of the FCC Rules and with Innovation, Science and Economic Development Canada's licence-exempt RSS(s). Operation is subject to the following two conditions:

1. This device may not cause harmful interference, and
2. This device must accept any interference received, including interference that may cause undesired operation.

Zambia

ZICTA

ZMB/ZICTA/TA/2017/12/14

PASSIVE KEY

Device	Supplier	Type Designation
Passive Key	Continental	A3C054341

Argentina

H-25995

Democratic Republic of Congo

Agréé par l'ARPTC

Nº d'homologation:

HER - 0180/Décembre/2022

Date d'homologation:

22/12/2022

Djibouti

AGREE PAR LE MCPT (REPUBLIQUE DE DJIBOUTI)

Numéro d'agrément:

032/DDTIC/2020

Date d'agrément:

07/06/2020

Ghana

NCA PRODUCT IDENTIFIERS: SRO-1M-7E4-X9A

Indonesia

Sertifikat Nomor: 90460/SDPPI/2023
PLG ID: 13493

Israel

1. מספר אישור התאמה מטעם משרד התקשורת: 51-33666
2. חל איסור לבצע פעולות במכשיר שיש בהן כדי לשנות את תכונותיו האלחוטיות של המכשיר, ובכלל זה שינוי תוכנה, החלפת אנטנה מקורית או הוספת אפשרות לחיבור לאנטנה חיצונית, בלא קבלת אישור משרד התקשורת, בשל החשש להפרעות אלחוטיות.

Jamaica

This product has been Type Approved by Jamaica: SMA – A3C054341

Malaysia

HIDF16000009

Mauritania

AGREE PAR L'ANE MAURITANIE

Numéro d'agrément:

0804/ARE/2020

Date d'agrément:

03/06/2020

Mexico

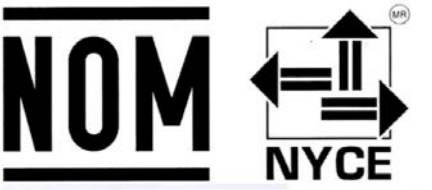

IFT: RLVCOA322-2509

Morocco

AGREE PAR L'ANRT MAROC

Numéro d'agrément:

MR 24103 ANRT

Date d'agrément:

18/05/2020

Paraguay

NR: 2020-09-I-000617

Serbia

Singapore

Complies with IMDA Standards
DA 00461

South Africa

Thailand

(1)เครื่องโทรคมนาคมและอุปกรณ์นี้ มีความสอดคล้องตามข้อกำหนดของ กทช.

(2)เครื่องวิทยุคมนาคมนี้มีระดับการแผ่คลื่นแม่เหล็กไฟฟ้าสอดคล้องตามมาตรฐานความปลอดภัยต่อสุขภาพของมนุษย์จากการใช้เครื่องวิทยุคมนาคมที่คณะกรรมการกิจการโทรคมนาคมแห่งชาติประกาศกำหนด

Ukraine

United Arab Emirates (U.A.E)

United Kingdom

Vietnam

Zambia

ZMB/ZICTA/TA/2020/6/248

PASSIVE KEY

Device	Supplier	Type Designation
Motion Sense Passive Key	Continental	A3C054342

Argentina

H-25996

Ghana

NCA APPROVED: SRO-1M-7E4-107

Israel

51-74154 .1 מספר אישור התאמה מטעם משרד התקשורת:
.2 חל איסור לבצע פעולות במכשיר שיש בהן כדי לשנות את תכונותיו האלחוטיות של המכשיר, ובכלל זה שינוי תוכנה, התלפת אנטנה מקורית או הוספת אפשרות לחיבור לאנטנה חיצונית, בלא קבלת אישור משרד התקשורת, כשל החשש להפרעות אלחוטיות.

Morocco

AGREE PAR L'ANRT MAROC

Numéro d'agrément:
MR00027379ANRT2021

Date d'agrément: 10/02/2021

Paraguay

NR: 2020-09-I-0618

Serbia

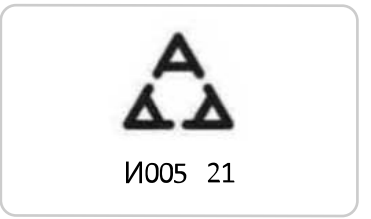

Sierra Leone

TAN: 2021-002-0049

Singapore

Complies with IMDA Standards

Dealer License Number:

DA 00461

South Korea

R-C-TAL-A3C054342

United Arab Emirates (U.A.E.)

TRA REGISTERED No:

ER81340/20

DEALER No:

DA88113/20

United Kingdom

UK CA

PASSIVE KEY

Device	Supplier	Type Designation
Passive Key	Continental	A2C93142100

Argentina

RAMATEL

H-16355

CNC COMISIÓN NACIONAL DE COMUNICACIONES

H-16355

European Union EU

Democratic Republic of Congo

Agréé par l'ARPTC

Nº d'homologation:

HIR - 0053/2016

Date d'homologation:

20/05/2016

Djibouti

AGREE PAR LE MCPT (REPUBLIQUE DE DJIBOUTI)

Numéro d'agrément:

074/DDTIC/MCPT

Date d'agrément:

20/05/2021

Ghana

NCA APPROVED: 2R9-1H-7E0-01A

Indonesia

Sertifikat Nomor: 90461/SDPPI/2023
PLG ID: 13493

Israel

1. מספר אישור התאמה מטעם משרד התקשורת: 51-95978
2. חל איסור לבצע פעולות במכשיר שיש בהן כדי לשנות את תכונותיו האלחוטיות של המכשיר, ובכלל זה שינוי תוכנה, החלפת אנטנה מקורית או הוספת אפשרות לחיבור לאנטנה חיצונית, בלא קבלת אישור משרד התקשורת, בשל החשש להפרעות אלחוטיות.

Jamaica

This product has been Type Approved by Jamaica: SMA – A2C93142100

Malaysia

HIDF16000009

Mauritania

AGREE PAR L'ANE MAURITANIE

Numéro d'agrément:

0919/ARE/2021

Date d'agrément:

18/02/2021

Mexico

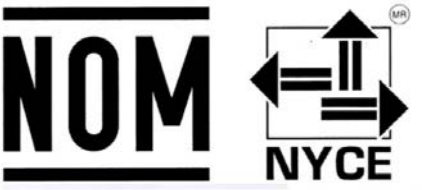

IFT: RLVCOA220-2687

Moldova

Morocco

AGREE PAR L'ANRT MAROC

Numéro d'agrément:

MR 12433 ANRT 2016

Date d'agrément:

31/08/2016

Pakistan

NR: 2016-9-I-000220

NR: 2021-60-I-0358

Serbia

Paraguay

Singapore

Complies with IMDA Standards

DA 00461

South Africa

Thailand

(1).เครื่องโทรคมนาคมและอุปกรณ์นี้ มีความสอดคล้องตามข้อกำหนดของ กทช.

(2).เครื่องวิทยุคมนาคมนี้มีระดับการแผ่คลื่นแม่เหล็กไฟฟ้าสอดคล้องตามมาตรฐานความปลอดภัยต่อสุขภาพของมนุษย์จากการใช้เครื่องวิทยุคมนาคมที่คณะกรรมการกิจการโทรคมนาคมแห่งชาติประกาศกำหนด

Ukraine

United Arab Emirates (U.A.E)

United Kingdom

Vietnam

Zambia

ZMB/ZICTA/TA/2016/10/9

PASSIVE KEY

Device	Supplier	Type Designation
Passive Key Transmitter	Continental	A2C931423

Argentina

H-24101

H-24101

Brazil

02444-16-01821

Jamaica

This product has been Type Approved by Jamaica: SMA – M3N-A2C931423

Paraguay

NR: 2016-9-I-000223

Taiwan

Four-button

CCAB16LP284CT7

Three-button

CCAB16LP284DT9

United States and Canada

FCC ID: M3N-A2C931423

IC: 7812A-A2C931423

This device complies with Part 15 of the FCC Rules and with Innovation, Science and Economic Development Canada's licence-exempt RSS(s). Operation is subject to the following two conditions:

1. This device may not cause harmful interference, and
2. This device must accept any interference received, including interference that may cause undesired operation.

L'émetteur/récepteur exempt de licence contenu dans le présent appareil est conforme aux CNR d'Innovation, Sciences et Développement économique Canada applicables aux appareils radio exempts de licence. L'exploitation est autorisée aux deux conditions suivantes:

1. L'appareil ne doit pas produire de brouillage;
2. L'appareil doit accepter tout brouillage radioélectrique subi, même si le brouillage est susceptible d'en compromettre le fonctionnement.

Note: Changes or modifications not expressly approved by the party responsible for compliance could void the user's authority to operate the equipment.

Nota: Tout changement apporté au dispositif sans l'approbation expresse des autorités compétentes pourrait révoquer le droit de l'utilisateur d'en faire usage.

RADIO TRANSCEIVER MODULE

Device	Supplier	Type Designation
Radio Transceiver Module	Aptiv	FO1-RX315UDA

Jamaica

This product has been Type Approved by Jamaica: FO1-RX315UDA

United States

FCC ID: L2C0082R

Taiwan

CCAB20LP0770T9

This device complies with Part 15 of the FCC Rules and with Innovation, Science and Economic Development Canada's licence-exempt RSS(s). Operation is subject to the following two conditions:

1. This device may not cause harmful interference, and
2. This device must accept any interference received, including interference that may cause undesired operation.

L'émetteur/récepteur exempt de licence contenu dans le présent appareil est conforme aux CNR d'Innovation, Sciences et Développement économique Canada applicables aux appareils radio exempts de licence. L'exploitation est autorisée aux deux conditions suivantes:

1. L'appareil ne doit pas produire de brouillage;
2. L'appareil doit accepter tout brouillage radioélectrique subi, même si le brouillage est susceptible d'en compromettre le fonctionnement.

Note: Changes or modifications not expressly approved by the party responsible for compliance could void the user's authority to operate the equipment.

Nota: Tout changement apporté au dispositif sans l'approbation expresse des autorités compétentes pourrait révoquer le droit de l'utilisateur d'en faire usage.

RADIO TRANSCEIVER MODULE

Device	Supplier	Type Designation
Radio Transceiver Module (RTM)	Aptiv	FO2-RX433UDA

Democratic Republic of Congo

Agréé par l'ARPTC

Nº d'homologation:

HER - 0151/Septembre/2022

Date d'homologation:

22/09/2022

Djibouti

AGREE PAR LE MCPT (REPUBLIQUE DE DJIBOUTI)

Numéro d'agrément:

033/DDTIC/2020

Date d'agrément:

07/06/2020

Europe Union EU

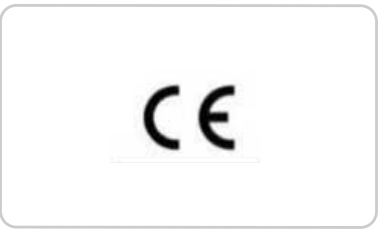

Ghana

NCA PRODUCT IDENTIFIERS: SRO-1M-7E4-108

Jamaica

This product has been Type Approved by Jamaica: SMA – FO2-RX433UDA

Independent State of Samoa

Israel

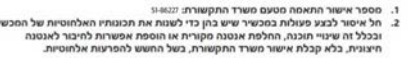
1. מספר אישור התאמה מטעם משרד התקשורת: 51-86227
2. חל איסור לבצע פעולות במכשיר שיש בהן כדי לשנות את תכונותיו האלחוטיות של המכשיר, ובכלל זה שינוי תוכנה, החלפת אנטנה מקורית או הוספת אפשרות לחיבור לאנטנה חיצונית, כלא קבלת אישור משרד התקשורת, בשל החשש להפרעות אלחוטיות.

1. מספר אישור התאמה מטעם משרד התקשורת: 56-03001
2. חל איסור לבצע פעולות במכשיר שיש בהן כדי לשנות את תכונותיו האלחוטיות של המכשיר, ובכלל זה שינוי תוכנה, החלפת אנטנה מקורית או הוספת אפשרות לחיבור לאנטנה חיצונית, בלא קבלת אישור משרד התקשורת, בשל החשש להפרעות אלחוטיות.

Malaysia

MCMC

HIDF16000009

Mauritania

AGREE PAR L'ANE MAURITANIE

Numéro d'agrément:

0803/ARE/2020

Date d'agrément:

03/06/2020

Mexico

NOM NYCE

IFT: RCPAPFO21-0004

Moldova

024

Morocco

AGREE PAR L'ANE MAROC
Numéro d'agrément : MR 24102 ANRT 2020
Date d'agrément : 18/05/2020

Pakistan

Pakistan Telecommunication Authority

PTA

Approved by PTA 2020

Taiwan

CCAB22LP1370T1

Thailand

เครื่องโทรคมนาคมและอุปกรณ์นี้ มีความสอดคล้องตามข้อกำหนดของ กทช.

Serbia

И011 23

Ukraine

UA.TR.028

South Africa

TA-2020/5481

ICASA APPROVED

United Kingdom

UK CA

United Arab Emirates (U.A.E.)

TDRA

ER20328/23
United Arab Emirates

Zambia

ZICTA

ZMB/ZICTA/TA/2020/6/247

RADIO TRANSCEIVER MODULE

Device	Supplier	Type Designation
Radio Transceiver Module	Aptiv	FO3-RX315UDA

Jamaica

This product has been Type Approved by Jamaica: FO3-RX315UDA

Taiwan

CCAB23LP0970T2

United States

FCC ID: L2C0087R

This device complies with Part 15 of the FCC Rules and with Innovation, Science and Economic Development Canada's licence-exempt RSS(s). Operation is subject to the following two conditions:

1. This device may not cause harmful interference, and
2. This device must accept any interference received, including interference that may cause undesired operation.

L'émetteur/récepteur exempt de licence contenu dans le présent appareil est conforme aux CNR d'Innovation, Sciences et Développement économique Canada applicables aux appareils radio exempts de licence. L'exploitation est autorisée aux deux conditions suivantes:

1. L'appareil ne doit pas produire de brouillage;
2. L'appareil doit accepter tout brouillage radioélectrique subi, même si le brouillage est susceptible d'en compromettre le fonctionnement.

Note: Changes or modifications not expressly approved by the party responsible for compliance could void the user's authority to operate the equipment.

Nota: Tout changement apporté au dispositif sans l'approbation expresse des autorités compétentes pourrait révoquer le droit de l'utilisateur d'en faire usage.

RADIO TRANSCEIVER MODULE

Device	Supplier	Type Designation
Radio Transceiver Module (RTM)	Aptiv	FO3-RX433UDA

Democratic Republic of Congo

Agréé par l'ARPTC

Nº d'homologation:

HER - 028/Juillet/2023

Date d'homologation:

21/07/2023

Ghana

NCA PRODUCT IDENTIFIERS: 7M-7E7-XC8-DSR

Israel

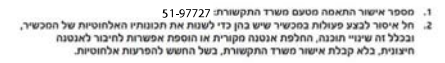

Mauritania

AGREE PAR L'ANE MAURITANIE

Numéro d'agrément:

1308/ARE/2023

Date d'agrément:

04/07/2023

Morocco

AGREE PAR L'ANRT MAROC

Numéro d'agrément:

MR00039249ANRT2023

Date d'agrément:

20/07/2023

Sierra Leone

TAN: 2024-002-0004

South Africa

Thailand

(1)เครื่องโทรคมนาคมและอุปกรณ์นี้ มีความสอดคล้องตามข้อกำหนดของ กทช.

(2)เครื่องวิทยุคมนาคมนี้ระดับการแผ่คลื่นแม่เหล็กไฟฟ้าสอดคล้องตามมาตรฐานความปลอดภัยต่อสุขภาพของมนุษย์จากการใช้เครื่องวิทยุคมนาคมที่คณะกรรมการกิจการโทรคมนาคมแห่งชาติประกาศกำหนด

Ukraine

United Arab Emirates (U.A.E.)

United Kingdom

United States and Canada

FCC ID: L2C0088R

CAN RSS-Gen/CNR-Gen

This device complies with Part 15 of the FCC Rules and with Innovation, Science and Economic Development Canada's licence-exempt RSS(s). Operation is subject to the following two conditions:

1. This device may not cause harmful interference, and
2. This device must accept any interference received, including interference that may cause undesired operation.

L'émetteur/récepteur exempt de licence contenu dans le présent appareil est conforme aux CNR d'Innovation, Sciences et Développement économique Canada applicables aux appareils radio exempts de licence. L'exploitation est autorisée aux deux conditions suivantes:

1. L'appareil ne doit pas produire de brouillage;
2. L'appareil doit accepter tout brouillage radioélectrique subi, même si le brouillage est susceptible d'en compromettre le fonctionnement.

Note: Changes or modifications not expressly approved by the party responsible for compliance could void the user's authority to operate the equipment.

Nota: Tout changement apporté au dispositif sans l'approbation expresse des autorités compétentes pourrait révoquer le droit de l'utilisateur d'en faire usage.

SYNC

Device	Supplier	Type Designation
SYNC	Ford	SYNC-G4 SYNC-G4L

Argentina

CNC COMISIÓN NACIONAL DE COMUNICACIONES

CNC ID: C-24008

CNC COMISIÓN NACIONAL DE COMUNICACIONES

CNC ID: C-24009

Brazil

08657-19-01505

Este equipamento não tem direito à proteção contra interferência prejudicial e não pode causar interferência em sistemas devidamente autorizados.

08658-19-01505

Este equipamento não tem direito à proteção contra interferência prejudicial e não pode causar interferência em sistemas devidamente autorizados.

Djibouti

AGREE PAR LE MCPT (REPUBLIQUE DE DJIBOUTI)
Numéro d'agrément : 124/DDTIC/2019
Date d'agrément : 07/08/2019

AGREE PAR LE MCPT (REPUBLIQUE DE DJIBOUTI)
Numéro d'agrément : 125/DDTIC/2019
Date d'agrément : 07/08/2019

European Union EU

Ghana

NCA APPROVED: ZRO-1H-7E3-182

NCA APPROVED: ZRO-1H-7E3-180

Indonesia

Model: SYNC-G4
Sertifikat Nomor: 80700/SDPPI/2022
PLG ID: 13493

Model: SYNC-G4L
Sertifikat Nomor: **81116**/SDPPI/2022
PLG ID: 13493

Jamaica

This product has been Type Approved by Jamaica: SMA – SYNC-G4.

This product has been Type Approved by Jamaica: SMA – SYNC-G4L.

Malaysia

MCMC

HIDF16000009

Mauritania

AGREE PAR L'ANE MAURITANIE
Numéro d'agrément : 0692/ARE/2018
Date d'agrément : 08/08/2019

AGREE PAR L'ANE MAURITANIE
Numéro d'agrément : 0691/ARE/2018
Date d'agrément : 08/08/2019

AGREE PAR L'ANRT MAROC
N° D'AGRÉMENT: MR 20606 ANRT 2019
07 AOUT 2019

Moldova

Pakistan

Morocco

AGREE PAR L'ANRT MAROC
N° D'AGRÉMENT: MR 20608 ANRT 2019
07 AOUT 2019

Paraguay

2020-03-I-00192
2020-03-I-00193

Serbia

Singapore

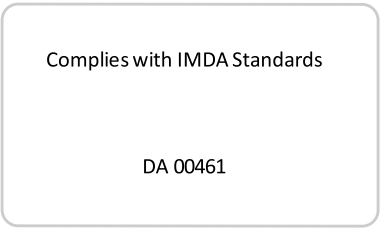

South Korea

MSIP-R-C-FDM-SYNCG4

MSIP-R-C-FDM-SYNCG4L

Taiwan

South Africa

Ukraine

CCAB20LP0300T1

UA.TR.028

United Arab Emirates (U.A.E.)

TDRA

ER74903/19
United Arab Emirates

TDRA

ER74902/19
United Arab Emirates

United Kingdom

United States and Canada

WARNING: Changes or modifications not expressively approved by the party responsible for compliance could void the user's authority to operate the equipment. The term "IC:" before the radio certification number only signifies that Industry Canada technical specifications were met.

FCC ID: KMH-SYNCG4

FCC ID: KMH-SYNCG4L

IC: 1422A-SYNCG4

IC: 1422A-SYNCG4L

This device complies with Part 15 of the FCC Rules and with Innovation, Science and Economic Development Canada's licence-exempt RSS(s). Operation is subject to the following two conditions:

1. This device may not cause harmful interference, and
2. This device must accept any interference received, including interference that may cause undesired operation.

Zambia

TELEMATICS CONTROL UNIT

Device	Supplier	Type Designation
Telematics Control Unit	Ford	FB5-TCU

Argentina

C-28150

Brazil

Europe Union EU

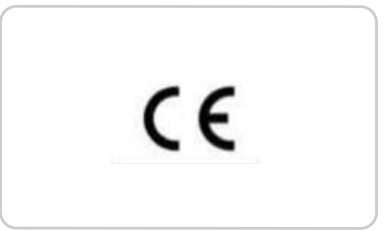

Malaysia

HIDF16000009

Mexico

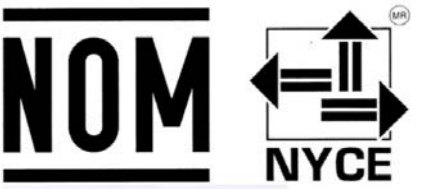

South Africa

Taiwan

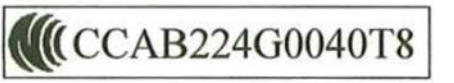

We recommend that the distance between the antenna of the telematics control unit and the user be greater than 35 cm (14 in) when using the telematics control unit.

United Arab Emirates (U.A.E.)

United Kingdom

United States and Canada

FCC ID: KMH-14H074-NA1

IC: 1422A-14H074NA1

This device complies with Part 15 of the FCC Rules and with Innovation, Science and Economic Development Canada's licence-exempt RSS(s). Operation is subject to the following two conditions:

1. This device may not cause harmful interference, and
2. This device must accept any interference received, including interference that may cause undesired operation.

L'émetteur/récepteur exempt de licence contenu dans le présent appareil est conforme aux CNR d'Innovation, Sciences et Développement économique Canada applicables aux appareils radio exempts de licence. L'exploitation est autorisée aux deux conditions suivantes:

1. L'appareil ne doit pas produire de brouillage;
2. L'appareil doit accepter tout brouillage radioélectrique subi, même si le brouillage est susceptible d'en compromettre le fonctionnement.

Note: Changes or modifications not expressly approved by the party responsible for compliance could void the user's authority to operate the equipment.

Nota: Tout changement apporté au dispositif sans l'approbation expresse des autorités compétentes pourrait révoquer le droit de l'utilisateur d'en faire usage.

Vietnam

TIRE PRESSURE MONITORING SYSTEM SENSORS - VEHICLES WITH: 315 MHZ SENSORS

Device	Supplier	Type Designation
315 Faraday TPMS Sensor	Schrader/Sensata	AG2SZ3

Customer Information

Argentina

RAMATEL

H-29761

Brazil

ANATEL
Agência Nacional de Telecomunicações
02109-14-08001

Israel

1. נתוני הציוד:
יצרן : Schrader Electronics Limited
דגם : AG2SZ3
סיג ציוד : מוטרו
השרות : יבשתי נייד
אופי ציוד : נייד

	תיחם תדרים (מה"ץ)		הספק (וואט)	רוחב פס (קה"ץ)	סיג אפנון
315.0000	315.0000	0.000006	170.00	ASK FSK

2. אישור זה בתוקף עד ליום 08/12/2022 אלא אם יבוטל/יחודש ע"י משרד התקשורת.

Jamaica

This product has been Type Approved by Jamaica: SMA – AG2SZ3

Mexico

IFT: RLVSCFP15-1249

"La operación de este equipo está sujeta a las siguientes dos condiciones: (1) es posible que este equipo o dispositivo no cause interferencia perjudicial y (2) este equipo o dispositivo debe aceptar cualquier interferencia, incluyendo la que pueda causar su operación no deseada."

Paraguay

CONATEL

NR: 2014-07-1-000191

Taiwan

CCAM14LP0460T0

本產品符合低功率電波輻射性電機管理辦法 第十二條、第十四條等條文規定
1. 經型式認證合格之低功率射頻電機，非經許可，公司、商號或使用者均不得擅自變更頻率、加大功率或變更原設計之特性及功能。

2. 低功率射頻電機之使用不得影響飛航安全及干擾合法通信；經發現有干擾現象時，應立即停用，並改善至無干擾時方得繼續使用。
前項合法通信，指依電信法規定作業之無線電通信。
低功率射頻電機須忍受合法通信或工業、科學及醫療用電波輻射性電機設備之干擾。

United Kingdom

UK CA

United States and Canada

FCC ID: MRXAG2SZ3

IC: 2546A-AG2SZ3

This device complies with Part 15 of the FCC Rules and with Innovation, Science and Economic Development Canada's licence-exempt RSS(s). Operation is subject to the following two conditions:

1. This device may not cause harmful interference, and
2. This device must accept any interference received, including interference that may cause undesired operation.

L'émetteur/récepteur exempt de licence contenu dans le présent appareil est conforme aux CNR d'Innovation, Sciences et Développement économique Canada applicables aux appareils radio exempts de licence. L'exploitation est autorisée aux deux conditions suivantes:

1. L'appareil ne doit pas produire de brouillage;
2. L'appareil doit accepter tout brouillage radioélectrique subi, même si le brouillage est susceptible d'en compromettre le fonctionnement.

Note: Changes or modifications not expressly approved by the party responsible for compliance could void the user's authority to operate the equipment.

Nota: Tout changement apporté au dispositif sans l'approbation expresse des autorités compétentes pourrait révoquer le droit de l'utilisateur d'en faire usage.

TIRE PRESSURE MONITORING SYSTEM SENSORS - VEHICLES WITH: 433 MHZ SENSORS

Device	Supplier	Type Designation
434 Faraday TPMS Sensor	Schrader/Sensata	AG2SZ4

Argentina

CNC COMISIÓN NACIONAL DE COMUNICACIONES

CNC ID: H-13498

Brazil

ANATEL
Agência Nacional de Telecomunicações

18962-22-08001

China

CMIIT ID:2014DJ1923

Democratic Republic of Congo

Agréé par l'ARPTC

Nº d'homologation: HIR -0051/4/2014

Date d'homologation: 16/4/2014

Djibouti

AGREE PAR LE MCPT (REPUBLIQUE DE DJIBOUTI)
Numéro d'agrément : 198/MCPT/DDTCC
Date d'agrément : 7/9/2021

European Union (EU)

CE

The RED 2014/53/EU (replacing R&TTE Directive 1999/5/EC on 13 June 2016) explicitly states that instructions for intentional radiators include reference to "(a) frequency band(s) in which the radio equipment operates; and (b) maximum radio-frequency power transmitted in the frequency band(s) in which the radio equipment operates," in addition to carrying over the general operational instruction and Declaration of Conformity inclusion requirements from the R&TTE Directive.

Hereby, Schrader Electronics Ltd. declares that the radio equipment type AG2SZ4 is in compliance with Directive 2014/53/EU. The full text of the EU declaration of conformity is available at the following internet address:

https://www.schradertpms.com/en-gb/downloads

f=433.92MHz

P<10mW (e.i.r.p)

Schrader Electronics Ltd. 11 Technology Park, Belfast Road, Antrim BT41 1QS, Northern Ireland United Kingdom.

Ghana

NCA APPROVED: 3R88M14030

Independent State of Samoa

SMO
Samoa

Indonesia

Sertifikat Nomor: 90379/SDPPI/2023
PLG ID: 13493

Israel

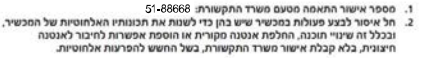

Mauritania

AGREE PAR L'ANE MAURITANIE
Numéro d'agrément : 0842/ARE/2020
Date d'agrément : 21/09/2020

Jamaica

This product has been Type Approved by Jamaica: SMA - AG2SZ4

Malaysia

HIDF16000009

Mexico

IFT: RLVSCMR15-1238

Moldova

Morocco

AGREE PAR L'ANRT MAROC
Numéro d'agrément: MR9098 ANRT 2014
Date d'agrément: 14/03/2014

Nigeria

Connection and use of this communications equipment is permitted by the Nigerian Communications Commission

NR: 2022-01-I-0032

Pakistan

Pakistan Telecommunication Authority

PTA

Approved by PTA 2020

Oman

OMAN TRA

TA-R/1752/14

D090258

Russia

EAC

Paraguay

CONATEL

Sierra Leone

NATCOM

TAN: 2017-002-0035

Serbia

И005 20

Singapore

Complies with IMDA Standards
DA 00461

South Africa

ICASA

TA-2014/064

Approved

South Korea

MSIP-CRM-SRD-AG2SZ4

Taiwan

CCAM14LP0090T3

Thailand

(1)เครื่องโทรคมนาคมและอุปกรณ์นี้ มีความสอดคล้องตามข้อกำหนดของ กทช.

(2)เครื่องวิทยุคมนาคมนี้ระดับการแผ่คลื่นแม่เหล็กไฟฟ้าสอดคล้องตามมาตรฐานความปลอดภัยต่อสุขภาพของมนุษย์จากการใช้เครื่องวิทยุคมนาคมที่คณะกรรมการกิจการโทรคมนาคมแห่งชาติประกาศกำหนด

Ukraine

United Arab Emirates (U.A.E)

United Kingdom

UKCA

United States and Canada

FCC ID: MRXAG2SZ4

IC: 2546A-AG2SZ4

This device complies with Part 15 of the FCC Rules and with Innovation, Science and Economic Development Canada's licence-exempt RSS(s). Operation is subject to the following two conditions:

1. This device may not cause harmful interference, and
2. This device must accept any interference received, including interference that may cause undesired operation.

L'émetteur/récepteur exempt de licence contenu dans le présent appareil est conforme aux CNR d'Innovation, Sciences et Développement économique Canada applicables aux appareils radio exempts de licence. L'exploitation est autorisée aux deux conditions suivantes:

1. L'appareil ne doit pas produire de brouillage;
2. L'appareil doit accepter tout brouillage radioélectrique subi, même si le brouillage est susceptible d'en compromettre le fonctionnement.

Note: Changes or modifications not expressly approved by the party responsible for compliance could void the user's authority to operate the equipment.

Nota: Tout changement apporté au dispositif sans l'approbation expresse des autorités compétentes pourrait révoquer le droit de l'utilisateur d'en faire usage.

Vietnam

Zambia

WIRELESS ACCESSORY CHARGING MODULE

Device	Supplier	Type Designation
Wireless Charger (WCM)	LG/BH EVS	WCFDM00N2A1 WCFDM00N2A3 WCFDM00N2A5

Argentina

CNC COMISIÓN NACIONAL DE COMUNICACIONES

CNC ID: H-26491

CNC COMISIÓN NACIONAL DE COMUNICACIONES

CNC ID: H-26492

CNC COMISIÓN NACIONAL DE COMUNICACIONES

CNC ID: H-26493

Brazil

ANATEL

Agência Nacional de Telecomunicações

12804-21-14208

Democratic Republic of Congo

Agréé par l'ARPTC

Nº d'homologation: HER-062/Avril/2023

Date d'homologation: 28/4/2023

European Union

CE

Ghana

NCA APPROVED: 7ES-7M-XB1-RDR

Indonesia

Model: WCFDM00N2A1
Sertifikat Nomor: 80110/SDPPI/2022
PLG ID: 13493

Model: WCFDM00N2A3
Sertifikat Nomor: 80111/SDPPI/2022
PLG ID: 13493

Model: WCFDM00N2A5
Sertifikat Nomor: 80112/SDPPI/2022
PLG ID: 13493

Israel

1. מספר אישור התאמה מטעם משרד התקשורת: 51-80014
2. חל איסור לבצע פעולות במכשיר שיש בהן כדי לשנות את תכונותיו האלחוטיות של המכשיר, ובכלל זה שינויי תוכנה, החלפת אנטנה מקורית או הוספת אפשרות לחיבור לאנטנה חיצונית, בלא קבלת אישור משרד התקשורת, בשל החשש להפרעות אלחוטיות

1. מספר אישור התאמה מטעם משרד התקשורת: 51-80015
2. חל איסור לבצע פעולות במכשיר שיש בהן כדי לשנות את תכונותיו האלחוטיות של המכשיר, ובכלל זה שינויי תוכנה, החלפת אנטנה מקורית או הוספת אפשרות לחיבור לאנטנה חיצונית, בלא קבלת אישור משרד התקשורת, בשל החשש להפרעות אלחוטיות

1. מספר אישור התאמה מטעם משרד התקשורת: 51-80013
2. חל איסור לבצע פעולות במכשיר שיש בהן כדי לשנות את תכונותיו האלחוטיות של המכשיר, ובכלל זה שינויי תוכנה, החלפת אנטנה מקורית או הוספת אפשרות לחיבור לאנטנה חיצונית, בלא קבלת אישור משרד התקשורת, בשל החשש להפרעות אלחוטיות

Jamaica

This product has been Type Approved by Jamaica:
SMA - WCFDM00N2A.

Malaysia

AGREE PAR L'ANE MAURITANIE
Numéro d'agrément : 0933/ARE/2021
Date d'agrément : 23/03/2021

HIDF16000009

Mauritania

AGREE PAR L'ANE MAURITANIE
Numéro d'agrément : 0935/ARE/2021
Date d'agrément : 23/03/2021

AGREE PAR L'ANE MAURITANIE
Numéro d'agrément : 0934/ARE/2021
Date d'agrément : 23/03/2021

Moldova

Morocco

AGREE PAR L'ANRT MAROC
Numéro d'agrément : MR 00027924ANRT 2021
Date d'agrément : 25/03/2021

AGREE PAR L'ANRT MAROC
Numéro d'agrément : MR 00027925ANRT 2021
Date d'agrément : 25/03/2021

AGREE PAR L'ANRT MAROC
Numéro d'agrément : MR 00027923ANRT 2021
Date d'agrément : 25/03/2021

Paraguay

CONATEL

NR: 2021-04-I-0202

NR: 2021-04-I-0203

NR: 2021-04-I-0204

Russia

EAC

Serbia

И005 21

Sierra Leone

NATCOM

TAN: 2021-002-0099

Singapore

Complies with IMDA Standards

DA 00461

South Korea

R-R-LGE-WCFDM00N2A1

South Africa

Taiwan

CCAB21LP050AT3

CCAB21LP0500T1

CCAB21LP050BT5

品名(Product name): 無線充電座
型號 (Type Designation): WCFDM00N2A1, WCFDM00N2A3, WCFDM00N2A5 **產地 (Origin):** 馬來西亞
額定電壓(Input rating): 12V
製造日期 (Approval date): 2021.04.21

申請廠商名稱(Approval name): 福特六和汽車股份有限公司
申請廠商地址(Approval address): 桃園市中壢區中華路一段705號

Ukraine

UA.TR.028

United Kingdom

UKCA

United Arab Emirates (U.A.E.)

TDRA

ER98638/21
United Arab Emirates

TDRA

ER00421/21
United Arab Emirates

TDRA

ER00421/21
United Arab Emirates

IC: 2703H-WCFDM00N2A

United States and Canada

FCC ID: BEJWCFDM00N2A

This equipment generates, uses, and can radiate radio frequency energy and may cause harmful interference to radio communications. There is no guarantee that interference will not occur in a particular installation. If this equipment does cause harmful interference to radio or television reception, please consult the dealer.

This product is not end-user serviceable.

RF Radiation Exposure Statement: This equipment complies with FCC RF Radiation exposure limits set forth for an uncontrolled environment. This device and its antenna must not be co-located or operating in conjunction with any other antenna or transmitter. This equipment should be installed and operated with a minimum distance of 20cm between the radiator and your body.

This device complies with Part 15 of the FCC Rules and with Innovation, Science and Economic Development Canada's licence-exempt RSS(s). Operation is subject to the following two conditions:

1. This device may not cause harmful interference, and
2. This device must accept any interference received, including interference that may cause undesired operation.

Le présent appareil est conforme aux CNR d'Industrie Canada applicables aux appareils radio exempts de licence. L'exploitation est autorisée aux deux conditions suivantes:

1. *L'appareil ne doit pas produire debrouillage;*
2. *L'appareil doit accepter tout brouillage radioélectrique subi, même si le brouillage est susceptible d'en compromettre le fonctionnement.*

Vietnam

Zambia

REPLACEMENT PARTS RECOMMENDATION

We have built your vehicle to the highest standards using quality parts. We recommend that you demand the use of genuine Ford and Motorcraft parts whenever your vehicle requires scheduled maintenance or repair. You can clearly identify genuine Ford and Motorcraft parts by looking for the Ford, FoMoCo or Motorcraft branding on the parts or their packaging.

Scheduled Maintenance and Mechanical Repairs

One of the best ways for you to make sure that your vehicle provides years of service is to have it maintained in line with our recommendations using parts that conform to the specifications detailed in this Owner's Manual.

Genuine Ford and Motorcraft parts meet or exceed these specifications.

Collision Repairs

We hope that you never experience a collision, but accidents happen sometimes.

Genuine Ford replacement collision parts meet our stringent requirements for fit, finish, structural integrity, corrosion protection and dent resistance. During vehicle development we validate that these parts deliver the intended level of protection as a whole system. A great way to know for sure you are getting this level of protection is to use genuine Ford replacement collision parts.

Warranty on Replacement Parts

Genuine Ford and Motorcraft replacement parts are the only replacement parts that benefit from a Ford Warranty.

The Ford Warranty may not cover damage caused to your vehicle as a result of failed non-Ford parts.

For additional information, refer to the terms and conditions of the Ford Warranty.

MOBILE COMMUNICATIONS EQUIPMENT

WARNING: Driving while distracted can result in loss of vehicle control, crash and injury. We strongly recommend that you use extreme caution when using any device that may take your focus off the road. Your primary responsibility is the safe operation of your vehicle. We recommend against the use of any hand-held device while driving and encourage the use of voice-operated systems when possible. Make sure you are aware of all applicable local laws that may affect the use of electronic devices while driving.

Using mobile communications equipment is becoming increasingly important in the conduct of business and personal affairs. However, you must not compromise your own or others' safety when using such equipment. Mobile communications can enhance personal safety and security when appropriately used, particularly in emergency situations. Safety must be paramount when using mobile communications equipment to avoid negating these benefits. Mobile communication equipment includes, but is not limited to, cellular phones, pagers, portable email devices, text messaging devices and portable two-way radios.

ECALL USER INFORMATION

eCall User Information According to Regulation (EU) 2017/78, Annex I, Part 3

1 DESCRIPTION OF THE ECALL IN-VEHICLE SYSTEM

1.1. Overview of the 112-based eCall in-vehicle system, its operation and functionalities: See **What Is eCall** (page 69).

1.2. The 112-based eCall service is a public service of general interest and is accessible free of charge.

1.3. The 112-based eCall in-vehicle system is activated by default. It is activated automatically by means of in-vehicle sensors in the event of a severe accident. It will also be triggered automatically when the vehicle is equipped with a TPS system which does not function in the event of a severe accident.

1.4. The 112-based eCall in-vehicle system can also be triggered manually, if needed. Instructions for manual activation of the system: See **Manually Making an Emergency Call** (page 69).

1.5. In the event of a critical system failure that would disable the 112-based eCall in-vehicle system, the following warning will be given to the occupants of the vehicle: See **Emergency Call Indicators** (page 70).

2 INFORMATION ON DATA PROCESSING

2.1. Any processing of personal data through the 112-based eCall in-vehicle system shall comply with the personal data protection rules provided for in Directives 95/46/EC (1) and 2002/58/EC (2) of the European Parliament and of the Council, and in particular, shall be based on the necessity to protect the vital interests of the individuals in accordance with Article 7(d) of Directive 95/46/EC (3).

2.2. Processing of such data is strictly limited to the purpose of handling the emergency eCall to the single European emergency number 112.

2.3. Types of data and its recipients.

2.3.1. The 112-based eCall in-vehicle system may collect and process only the following data:

- Vehicle Identification Number.
- Vehicle type (passenger vehicle or light commercial vehicle).
- Vehicle propulsion storage type (gasoline/diesel/CNG/LPG/electric/hydrogen).
- Vehicle last three locations and direction of travel.
- Log file of the automatic activation of the system and its timestamp.
- Any additional data (if applicable): See **Emergency Call System Data** (page 30).

2.3.2. Recipients of data processed by the 112-based eCall in-vehicle system are the relevant public safety answering points designated by the respective public authorities of the country on which territory they are located, to first receive and handle eCalls to the single European emergency number 112.
Additional information (if available): -

2.4. Arrangements for data processing.

2.4.1. The 112-based eCall in-vehicle system is designed in such a way as to ensure that the data contained in the system memory is not available outside the system before an eCall is triggered.
Additional remarks (if any): -

2.4.2. The 112-based eCall in-vehicle system is designed in such a way as to ensure that it is not traceable and not subject to any constant tracking in its normal operation status.
Additional remarks (if any): -

2.4.3. The 112-based eCall in-vehicle system is designed in such a way as to ensure that data in the system internal memory is automatically and continuously removed.

2.4.3.1. The vehicle location data is constantly overwritten in the internal memory of the system so as always to keep maximum of the last three up-to-date locations of the vehicle necessary for the normal functioning of the system.

2.4.3.2. The log of activity data in the 112-based eCall in-vehicle system is kept for no longer than necessary for attaining the purpose of handling the emergency eCall and in any case not beyond 13 hours from the moment an emergency eCall was initiated.
Additional remarks (if any): -

2.5. Modalities for exercising data subject's rights.

2.5.1. The data subject (the vehicle's owner) has a right of access to data and as appropriate to request the rectification, erasure or blocking of data, concerning him or her, the processing of which does not comply with the provisions of Directive 95/46/EC. Any third parties to whom the data have been disclosed have to be notified of such rectification, erasure or blocking carried out in compliance with this Directive, unless it proves impossible or involves a disproportionate effort.

2.5.2. The data subject has a right to complain to the competent data protection authority if he or she considers that his or her rights have been infringed as a result of the processing of his or her personal data.

2.5.3. Contact service responsible for handling access requests (if any): Contact the data protection officer of your local Public Safety Answering Point.

(1) Directive 95/46/EC of the European Parliament and of the Council of 24 October 1995 on the protection of individuals with regard to the processing of personal data and on the free movement of such data (OJ L 281, 23.11.1995, p. 31).

(2) Directive 2002/58/EC of the European Parliament and of the Council of 12 July 2002 concerning the processing of personal data and the protection of privacy in the electronic communications sector (Directive on privacy and electronic communications) (OJ L 201, 31.7.2002, p. 37).

(3) Directive 95/46/EC is repealed by Regulation (EU) 2016/679 of the European Parliament and of the Council of 27 April 2016 on the protection of natural persons with regard to the processing of personal data and on the free movement of such data (General Data Protection Regulation) (OJ L 119, 4.5.2016, p. 1). The Regulation applies from 25 May 2018.

3 INFORMATION ON THIRD PARTY SERVICES AND OTHER ADDED VALUE SERVICES (IF FITTED)

3.1. Description of the operation and the functionalities of the TPS system/added value service: Your vehicle may be equipped with a modem that allows for emergency calls (eCall), automatic software updates and other services. See the information in this Owner's Manual or in the FordPass app for a description of these services. We provide a 112-based eCall in-vehicle system and we do not provide a TPS eCall system.

3.2. Any processing of personal data through the TPS system/other added value service shall comply with the personal data protection rules provided for in Directives 95/46/EC and 2002/58/EC.

3.2.1. Legal basis for the use of TPS system and/or added value services and for processing data through them: For information on the legal bases for processing of personal data through added value services, review the data privacy information for any services to which you subscribe. This privacy information can be found in the FordPass app or on the local Ford website.

3.3. The TPS system and/or other added value services shall process personal data only on the base of the explicit consent of the data subject (the vehicle's owner or owners).

3.4. Modalities for data processing through TPS system and/or other added value services, including any necessary additional information regarding traceability, tracking and processing of personal data: See the privacy information in the FordPass app or on the local Ford website.

3.5. The owner of a vehicle equipped with a TPS eCall system and/or other added value service in addition to the 112-based eCall in-vehicle system has the right to choose to use the 112-based eCall in-vehicle system rather than the TPS eCall system and the other added value service.

3.5.1. Contact details for handling TPS eCall system deactivation requests: You can have all added value services deactivated except for eCall. To find out more about having all added value services deactivated except for eCall, search Ask Ford on the local Ford website or contact the Ford Customer Relationship Center by e-mail through the FordPass app or by using the e-mail address on the local Ford website.

END USER LICENSE AGREEMENT

VEHICLE SOFTWARE END USER LICENSE AGREEMENT (EULA)

- You (“You” or “Your” as applicable) have acquired a vehicle having several devices, including SYNC ® and various control modules, ("DEVICES") that include software licensed or owned by Ford Motor Company and its affiliates ("FORD MOTOR COMPANY"). Those software products of FORD MOTOR COMPANY origin, as well as associated media, printed materials, and "online" or electronic documentation ("SOFTWARE") are protected by international intellectual property laws and treaties. The SOFTWARE is licensed, not sold. All rights reserved.
- The SOFTWARE may interface with and/or communicate with, or may be later upgraded to interface with and/or communicate with additional software and/or systems provided by FORD MOTOR COMPANY.

IF YOU DO NOT AGREE TO THIS END USER LICENSE AGREEMENT ("EULA") DO NOT USE THE DEVICES OR COPY THE SOFTWARE. ANY USE OF THE SOFTWARE, INCLUDING BUT NOT LIMITED TO USE ON THE DEVICES, WILL CONSTITUTE YOUR AGREEMENT TO THIS EULA (OR RATIFICATION OF ANY PREVIOUS CONSENT).

GRANT OF SOFTWARE LICENSE: This EULA grants you the following license:

- You may use the SOFTWARE as installed on the DEVICES and as otherwise interfacing with systems and/or services provide by or through FORD MOTOR COMPANY or its third party software and service providers.

Description of Other Rights and Limitations.

- **Speech Recognition:** If the SOFTWARE includes speech recognition component(s), you should understand that speech recognition is an inherently statistical process and that recognition errors are inherent in the process. Neither FORD MOTOR COMPANY nor its suppliers shall be liable for any damages arising out of errors in the speech recognition process. It is your responsibility to monitor any speech recognition functions included in the system.
- **Limitations on Reverse Engineering, Decompilation and Disassembly:** You may not reverse engineer, decompile, translate, disassemble or attempt to discover any source code or underlying ideas or algorithms of the SOFTWARE nor permit others to reverse engineer, decompile or disassemble the SOFTWARE, except and only to the extent that such activity is expressly permitted by applicable law notwithstanding this limitation or to the extent as may be permitted by the licensing terms governing use of any open source components included with the SOFTWARE.
- **Limitations on Distributing, Copying, Modifying and Creating Derivative Works:** You may not distribute, copy, make modifications to or create derivative works based on the SOFTWARE, except and only to the extent that such activity is expressly permitted by applicable law notwithstanding this limitation or to the extent as may be permitted by the licensing terms governing use of any open source components included with the SOFTWARE.

- **Single EULA:** The end user documentation for the DEVICES and related systems and services may contain multiple EULAs, such as multiple translations and/or multiple media versions (e.g., in the user documentation and in the software). Even if you receive multiple EULAs, you are licensed to use only one (1) copy of the SOFTWARE.
- **SOFTWARE Transfer:** You may permanently transfer your rights under this EULA only as part of a sale or transfer of the DEVICES, provided you retain no copies, you transfer all of the SOFTWARE (including all component parts, the media and printed materials, any upgrades, and, if applicable, the Certificate(s) of Authenticity), and the recipient agrees to the terms of this EULA. If the SOFTWARE is an upgrade, any transfer must include all prior versions of the SOFTWARE.
- **Termination:** Without prejudice to any other rights, FORD MOTOR COMPANY may terminate this EULA if you fail to comply with the terms and conditions of this EULA.
- **Internet-Based Services Components:** The SOFTWARE may contain components that enable and facilitate the use of certain Internet-based services. You acknowledge and agree that FORD MOTOR COMPANY, third party software and service suppliers, its affiliates and/or its designated agent may automatically check the version of the SOFTWARE and/or its components that you are utilizing and may provide upgrades or supplements to the SOFTWARE that may be automatically downloaded to your DEVICES.
- **Additional Software/Services:** The SOFTWARE may permit FORD MOTOR COMPANY, third party software and service suppliers, its affiliates and/or its designated agent to provide or make available to you SOFTWARE updates, supplements, add-on components, or Internet-based services components of the SOFTWARE after the date you obtain your initial copy of the SOFTWARE ("Supplemental Components".) SOFTWARE updates may cause you to incur additional charges from your wireless service provider. If FORD MOTOR COMPANY or third party software and services suppliers provide or make available to you Supplemental Components and no other EULA terms are provided along with the Supplemental Components, then the terms of this EULA shall apply. FORD MOTOR COMPANY, its affiliates and/or its designated agent reserve the right to discontinue without liability any Internet-based services provided to you or made available to you through the use of the SOFTWARE.

- **Links to Third Party Sites:** The SOFTWARE may provide you with the ability to link to third party sites. The third party sites are not under the control of FORD MOTOR COMPANY, its affiliates and/or its designated agent. Neither FORD MOTOR COMPANY nor its affiliates nor its designated agent are responsible for (I) the contents of any third party sites, any links contained in third party sites, or any changes or updates to third party sites, or (ii) webcasting or any other form of transmission received from any third party sites. If the SOFTWARE provides links to third party sites, those links are provided to you only as a convenience, and the inclusion of any link does not imply an endorsement of the third party site by FORD MOTOR COMPANY, its affiliates and/or its designated agent.
- **Obligation to Drive Responsibly:** You recognize your obligation to drive responsibly and keep attention on the road. You will read and abide with the DEVICES operating instructions particularly as they pertain to safety and you agree to assume any risk associated with the use of the DEVICES.

UPGRADES AND RECOVERY MEDIA: If the SOFTWARE is provided by FORD MOTOR COMPANY separate from the DEVICES on media such as a ROM chip, CD ROM disk(s) or via web download or other means, and is labeled "For Upgrade Purposes Only" or "For Recovery Purposes Only" you may install one (1) copy of such SOFTWARE onto the DEVICES as a replacement copy for the existing SOFTWARE, and use it in accordance with this EULA, including any additional EULA terms accompanying the upgrade SOFTWARE.

INTELLECTUAL PROPERTY RIGHTS: All title and intellectual property rights in and to the SOFTWARE (including but not limited to any images, photographs, animations, video, audio, music, text and "applets" incorporated into the SOFTWARE), the accompanying printed materials, and any copies of the SOFTWARE, are owned by FORD MOTOR COMPANY, or its affiliates or suppliers. The SOFTWARE is licensed, not sold. You may not copy the printed materials accompanying the SOFTWARE. All title and intellectual property rights in and to the content which may be accessed through use of the SOFTWARE is the property of the respective content owner and may be protected by applicable copyright or other intellectual property laws and treaties. This EULA grants you no rights to use such content outside its intended use. All rights not specifically granted under this EULA are reserved by FORD MOTOR COMPANY, its affiliates, and third party software and service providers and suppliers. Use of any on-line services which may be accessed through the SOFTWARE may be governed by the respective terms of use relating to such services. If this SOFTWARE contains documentation that is provided only in electronic form, you may print one copy of such electronic documentation.

EXPORT RESTRICTIONS: You acknowledge that the SOFTWARE is subject to U.S. and European Union export jurisdiction. You agree to comply with all applicable international and national laws that apply to the SOFTWARE, including the U.S. Export Administration Regulations, as well as end-user, end-use and destination restrictions issued by U.S. and other governments.

TRADEMARKS: This EULA does not grant you any rights in connection with any trademarks or service marks of FORD MOTOR COMPANY, its affiliates, and third party software and service providers.

PRODUCT SUPPORT: Please refer to FORD MOTOR COMPANY instructions provided in the documentation for the DEVICES product support, such as the vehicle owner guide.

Should you have any questions concerning this EULA, or if you desire to contact FORD MOTOR COMPANY for any other reason, please refer to the address provided in the documentation for the DEVICES.

No Liability for Certain Damages: EXCEPT AS PROHIBITED BY LAW, FORD MOTOR COMPANY, ANY THIRD PARTY SOFTWARE OR SERVICES SUPPLIERS, AND THEIR AFFILIATES SHALL HAVE NO LIABILITY FOR ANY INDIRECT, SPECIAL, CONSEQUENTIAL OR INCIDENTAL DAMAGES ARISING FROM OR IN CONNECTION WITH THE USE OR PERFORMANCE OF THE SOFTWARE. THIS LIMITATION SHALL APPLY EVEN IF ANY REMEDY FAILS OF ITS ESSENTIAL PURPOSE. THERE ARE NO WARRANTIES OTHER THAN THOSE THAT MAY BE EXPRESSLY PROVIDED FOR YOUR NEW VEHICLE.

SYNC® Automotive Important Safety Information Read and follow instructions:

- Before using your SYNC® system, read and follow all instructions and safety information provided in this end user manual ("Owner Guide".) Not following precautions found in the Owner Guide can lead to an accident or other serious injuries.

General Operation

- **Voice Command Control**: Certain functions within the SYNC® system may be accomplished using voice commands. Using voice commands while driving helps you to operate the system without removing your hands from the wheel or eyes from the road.
- **Prolonged Views of Screen:** Do not access any function requiring a prolonged view of the screen while you are driving. Pull over in a safe and legal manner before attempting to access a function of the system requiring prolonged attention.
- **Volume Setting:** Do not raise the volume excessively. Keep the volume at a level where you can still hear outside traffic and emergency signals while driving. Driving while unable to hear these sounds could cause an accident.
- **Navigation Features:** Any navigation features included in the system are intended to provide turn by turn instructions to get you to a desired destination. Please make certain all persons using this system carefully read and follow instructions and safety information fully.
- **Distraction Hazard:** Any navigation features may require manual (non-verbal) setup. Attempting to perform such set-up or insert data while driving can distract your attention and could cause an accident or other serious injury. Stop the vehicle in a safe and legal manner before attempting these operations.
- **Let Your Judgment Prevail:** Any navigation features are provided only as an aid. Make your driving decisions based on your observations of local conditions and existing traffic regulations. Any such feature is not a

substitute for your personal judgment. Any route suggestions made by this system should never replace any local traffic regulations or your personal judgment or knowledge of safe driving practices.

- **Route Safety:** Do not follow the route suggestions if doing so would result in an unsafe or illegal maneuver, if you would be placed in an unsafe situation, or if you would be directed into an area that you consider unsafe. The driver is ultimately responsible for the safe operation of the vehicle and therefore, must evaluate whether it is safe to follow the suggested directions.
- **Potential Map Inaccuracy:** Maps used by this system may be inaccurate because of changes in roads, traffic controls or driving conditions. Always use good judgment and common sense when following the suggested routes.
- **Emergency Services:** Do not rely on any navigation features included in the system to route you to emergency services. Ask local authorities or an emergency services operator for these locations. Not all emergency services such as police, fire stations, hospitals and clinics are likely to be contained in the map database for such navigation features.

Your Responsibilities and Assumptions of Risk

- You agree to each of the following:(a) Any use of the SOFTWARE while driving an automobile or other vehicle in violation of applicable law or otherwise driving in an unsafe manner presents a significant risk of distracted driving and should not be attempted under any circumstances;(b) Use of the SOFTWARE at excessive volume poses a significant risk of hearing damage and should not be attempted under any circumstances;(c) The SOFTWARE may not be compatible with new or different versions of an operating system, third party software, or third party services, and the SOFTWARE may potentially cause a critical failure of an operating system, third party software, or third party service.(d) Any third party service accessed by or third party software used with the SOFTWARE (I) may charge an additional fee for access, (ii) may not work correctly, on an uninterrupted basis, or error free, (iii) may change streaming formats or discontinue operation, (iv) may contain adult, profane or offensive content; and (v) may contain inaccurate, false or misleading traffic, weather, financial or safety information or other content; and (e) Use of the SOFTWARE may cause you to incur additional charges from your wireless service provider (WSP) and any data or minute calculators that may be included in the software program are for reference only, are not warranted in any way and should not be relied upon in anyway.
- When using the SOFTWARE, you agree to be responsible for and assume the entire risk to the items set forth in Section (a) – (e) above.

Disclaimer of Warranty

YOU EXPRESSLY ACKNOWLEDGE AND AGREE THAT USE OF THE DEVICES AND SOFTWARE IS AT YOUR SOLE RISK AND THAT THE ENTIRE RISK AS TO SATISFACTORY QUALITY, PERFORMANCE, COMPATIBILITY, ACCURACY AND EFFORT IS WITH YOU. TO THE MAXIMUM EXTENT PERMITTED BY APPLICABLE LAW, THE SOFTWARE AND ANY THIRD PARTY SOFTWARE OR THIRD-PARTY SERVICES ARE PROVIDED "AS IS" AND “AS AVAILABLE”, WITH ALL FAULTS AND WITHOUT WARRANTY OF ANY KIND, AND FORD MOTOR COMPANY HEREBY DISCLAIMS ALL WARRANTIES AND CONDITIONS WITH RESPECT TO THE SOFTWARE, THIRD PARTY SOFTWARE, AND THIRD-PARTY SERVICES, EITHER EXPRESS, IMPLIED OR STATUTORY, INCLUDING, BUT NOT LIMITED TO, THE IMPLIED WARRANTIES AND/OR CONDITIONS OF MERCHANTABILITY, OF SATISFACTORY QUALITY, OF FITNESS FOR AN ARTICULAR PURPOSE, OF ACCURACY, OF QUIET ENJOYMENT, AND NON-INFRINGEMENT OF THIRD-PARTY RIGHTS. FORD MOTOR COMPANY DOES NOT WARRANT (a) AGAINST INTERFERENCE WITH YOUR ENJOYMENT OF THE SOFTWARE, THIRD PARTY SOFTWARE, OR THIRD-PARTY SERVICES, (b) THAT THE SOFTWARE, THIRD PARTY SOFTWARE, OR THIRD-PARTY SERVICES WILL MEET YOUR REQUIREMENTS, (c) THAT THE OPERATION OF THE SOFTWARE, THIRD PARTY SOFTWARE, OR THIRD-PARTY SERVICES WILL BE UNINTERRUPTED OR ERROR-FREE, (d) OR THAT DEFECTS IN THE SOFTWARE, THIRD PARTY SOFTWARE, OR THIRD-PARTY SERVICES WILL BE CORRECTED. NO ORAL OR WRITTEN INFORMATION OR ADVICE GIVEN BY FORD MOTOR COMPANY OR ITS AUTHORIZED REPRESENTATIVE SHALL CREATE A WARRANTY. SHOULD THE SOFTWARE, THIRD PARTY SOFTWARE, OR THIRD-PARTY SERVICES PROVE DEFECTIVE, YOU ASSUME THE ENTIRE COST OF ALL NECESSARY SERVICING, REPAIR OR CORRECTION. SOME JURISDICTIONS DO NOT ALLOW THE DISCLAIMER OF IMPLIED WARRANTIES OR LIMITATIONS ON APPLICABLE STATUTORY RIGHTS OF A CONSUMER, SO THE ABOVE DISCLAIMER MAY NOT FULLY APPLY TO YOU. THE SOLE WARRANTY PROVIDED BY FORD MOTOR COMPANY SHALL BE FOUND IN THE WARRANTY INFORMATION INCLUDING WITH YOUR OWNER GUIDE. TO THE EXTENT THAT THERE IS ANY CONFLICT BETWEEN THE TERMS OF THIS SECTION AND THE WARRANTY BOOKLET, THE WARRANTY BOOKLET SHALL CONTROL.

Applicable Law, Venue, Jurisdiction

- The laws of the State of Michigan govern this EULA and Your use of the SOFTWARE. Your use of the SOFTWARE may also be subject to other local, state, national, or international laws. Any litigation arising out of or related to this EULA shall be brought and maintained exclusively in a court of the State of Michigan located in Wayne County or in the United States District Court for the Eastern District of Michigan. You hereby consent to submit to the personal jurisdiction of a court in the State of Michigan located in Wayne County and the United States District Court for the Eastern District of Michigan for any dispute arising out of or relating to this EULA.

Binding Arbitration and Class Action Waiver

(a) Application. This Section applies to any dispute EXCEPT IT DOES NOT INCLUDE A DISPUTE RELATING TO COPYRIGHT INFRINGEMENT, OR TO THE ENFORCEMENT OR VALIDITY OF YOUR, FORD MOTOR COMPANY, OR ANY OF FORD MOTOR COMPANY'S LICENSORS' INTELLECTUAL PROPERTY RIGHTS. Dispute means any dispute, action, or other controversy between You and FORD MOTOR COMPANY, other than the exceptions listed above, concerning the SOFTWARE (including its price) or this EULA, whether in contract, warranty, tort, statute, regulation, ordinance, or any other legal or equitable basis.

(b) Notice of Dispute. In the event of a Dispute, You or FORD MOTOR COMPANY must give the other a "Notice of Dispute", which is a written statement of the name, address, and contact information of the party giving it, the facts giving rise to the dispute, and the relief requested. You and FORD MOTOR COMPANY will attempt to resolve any dispute through informal negotiation within 60 days from the date the Notice of Dispute is sent. After 60 days, You or FORD MOTOR COMPANY may commence arbitration.

(c) Small claims court. You may also litigate any dispute in small claims court in your county of residence or FORD MOTOR COMPANY'S principal place of business, if the dispute meets all requirements to be heard in the small claims court. You may litigate in small claims court whether or not You negotiated informally first.

(d) Binding arbitration. If You and FORD MOTOR COMPANY, do not resolve any dispute by informal negotiation or in small claims court, any other effort to resolve the dispute will be conducted exclusively by binding arbitration. You are giving up the right to litigate (or participate in as a party or class member) all disputes in court before a judge or jury. Instead, all disputes will be resolved before a neutral arbitrator, whose decision will be final except for a limited right of appeal under the Federal Arbitration Act. Any court with jurisdiction over the parties may enforce the arbitrator's award.

(e) Class action waiver. Any proceedings to resolve or litigate any dispute in any forum will be conducted solely on an individual basis. Neither you nor FORD MOTOR COMPANY, will seek to have any dispute heard as a class action, as a private attorney general action, or in any other proceeding in which any party acts or proposes to act in a representative capacity. No arbitration or proceeding will be combined with another without the prior written consent of all parties to all affected arbitrations or proceedings.

(f) Arbitration procedure. Any arbitration will be conducted by the American Arbitration Association (the "AAA"), under its Commercial Arbitration Rules. If You are an individual and use the SOFTWARE for personal or vehicle use, or if the value of the dispute is $75,000 or less whether or not You are an individual or how You use the SOFTWARE, the AAA Supplementary Procedures for Consumer-Related Disputes will also apply. To commence arbitration, submit a Commercial Arbitration Rules Demand for Arbitration form to the AAA. You may request a telephonic or in-person hearing by following the AAA rules. In a dispute involving $10,000 or less, any hearing will be telephonic unless the arbitrator finds good cause to hold an in-person hearing instead. For more information, see adr.org or call 1-800-778-7879. You agree to commence arbitration only in your county of residence or FORD MOTOR COMPANY'S principal place of business. The arbitrator

may award the same damages to you individually as a court could. The arbitrator may award declaratory or injunctive relief only to you individually, and only to the extent required to satisfy your individual claim.

(g) Arbitration fees and incentives.

- I. Disputes involving $75,000 or less. FORD MOTOR COMPANY will promptly reimburse your filing fees and pay the AAA's and arbitrator's fees and expenses. If you reject FORD MOTOR COMPANY'S last written settlement offer made before the arbitrator was appointed ("last written offer"), your dispute goes all the way to an arbitrator's decision (called an "award"), and the arbitrator awards you more than the last written offer, FORD MOTOR COMPANY will give you three incentives: (1) pay the greater of the award or $1,000; (2) pay twice your reasonable attorney's fees, if any; and (3) reimburse any expenses (including expert witness fees and costs) that your attorney reasonably accrues for investigating, preparing, and pursuing your claim in arbitration. The arbitrator will determine the amounts.
- ii. Disputes involving more than $75,000. The AAA rules will govern payment of filing fees and the AAA's and arbitrator's fees and expenses.
- iii. Disputes involving any amount. In any arbitration you commence, FORD MOTOR COMPANY will seek its AAA or arbitrator's fees and expenses, or Your filing fees it reimbursed, only if the arbitrator finds the arbitration frivolous or brought for an improper purpose. In any arbitration FORD MOTOR COMPANY commences, it will pay all filing, AAA, and arbitrator's fees and expenses. It will not seek its attorney's fees or expenses from you in any arbitration. Fees and expenses are not counted in determining how much a dispute involves.

(h) Claims or disputes must be filed within one year. To the extent permitted by law, any claim or dispute under this EULA to which this Section applies must be filed within one year in small claims court (Section c) or in arbitration (Section d). The one-year period begins when the claim or dispute first could be filed. If such a claim or dispute is not filed within one year, it is permanently barred.

(I) Severability. If the class action waiver (Section e) is found to be illegal or unenforceable as to all or some parts of a dispute, then that portion of Section e will not apply to those parts. Instead, those parts will be severed and proceed in a court of law, with the remaining parts proceeding in arbitration. If any other provision of that portion Section e is found to be illegal or unenforceable, that provision will be severed with the remainder of Section e remaining in full force and effect.

Telenav Software End User License Agreement

Please read these terms and conditions carefully before you use the TeleNav Software. Your use of the TeleNav Software indicates that you accept these terms and conditions. If you do not accept these terms and conditions, do not break the seal of the package, launch, or otherwise use the TeleNav Software. TeleNav may revise this Agreement and the privacy policy at any time, with or without notice to you. You agree to visit http://www.telenav.com from time to time to review the then current version of this Agreement and of the privacy policy.

1. Safe and Lawful Use

You acknowledge that devoting attention to the TeleNav Software may pose a risk of injury or death to you and others in situations that otherwise require your undivided attention, and you therefore agree to comply with the following when using the TeleNav Software:

(a) observe all traffic laws and otherwise drive safely;

(b) use your own personal judgment while driving. If you feel that a route suggested by the TeleNav Software instructs you to perform an unsafe or illegal maneuver, places you in an unsafe situation, or directs you into an area that you consider to be unsafe, do not follow such instructions;

(c) do not input destinations, or otherwise manipulate the TeleNav Software, unless your vehicle is stationary and parked;

(d) do not use the TeleNav Software for any illegal, unauthorized, unintended, unsafe, hazardous, or unlawful purposes, or in any manner inconsistent with this Agreement;

(e) arrange all GPS and wireless devices and cables necessary for use of the TeleNav Software in a secure manner in your vehicle so that they will not interfere with your driving and will not prevent the operation of any safety device (such as an airbag).

You agree to indemnify and hold TeleNav harmless against all claims resulting from any dangerous or otherwise inappropriate use of the TeleNav Software in any moving vehicle, including as a result of your failure to comply with the directions above.

2. Account Information

You agree: (a) when registering the TeleNav Software, to provide TeleNav with true, accurate, current, and complete information about yourself, and (b) to inform TeleNav promptly of any changes to such information, and to keep it true, accurate, current and complete.

3. Software License

- Subject to your compliance with the terms of this Agreement, TeleNav hereby grants to you a personal, non-exclusive, non-transferable license (except as expressly permitted below in connection with your permanent transfer of the TeleNav Software license), without the right to sublicense, to use the TeleNav Software (in object code form only) in order to access and use the TeleNav Software. This license shall terminate upon any termination or expiration of this Agreement. You agree that you will use the TeleNav Software only for your personal business or leisure purposes, and not to provide commercial navigation services to other parties.

3.1 License Limitations

- **(a)** reverse engineer, decompile, disassemble, translate, modify, alter or otherwise change the TeleNav Software or any part thereof; **(b)** attempt to derive the source code, audio library or structure of the TeleNav Software without the prior express written consent of TeleNav; **(c)** remove from the TeleNav Software, or alter, any of TeleNav's or its suppliers' trademarks, trade names, logos, patent or copyright notices, or other notices or markings; **(d)**

distribute, sublicense or otherwise transfer the TeleNav Software to others, except as part of your permanent transfer of the TeleNav Software; or **(e)** use the TeleNav Software in any manner that

I. infringes the intellectual property or proprietary rights, rights of publicity or privacy or other rights of any party,

ii. violates any law, statute, ordinance or regulation, including but not limited to laws and regulations related to spamming, privacy, consumer and child protection, obscenity or defamation, or

iii. is harmful, threatening, abusive, harassing, tortuous, defamatory, vulgar, obscene, libelous, or otherwise objectionable; and (f) lease, rent out, or otherwise permit unauthorized access by third parties to the TeleNav Software without advanced written permission of TeleNav.

4. Disclaimers

- To the fullest extent permissible pursuant to applicable law, in no event will TeleNav, its licensors and suppliers, or agents or employees of any of the foregoing, be liable for any decision made or action taken by you or anyone else in reliance on the information provided by the TeleNav Software. TeleNav also does not warrant the accuracy of the map or other data used for the TeleNav Software. Such data may not always reflect reality due to, among other things, road closures, construction, weather, new roads and other changing conditions. You are responsible for the entire risk arising out of your use of the TeleNav Software. For example but without limitation, you agree not to rely on the TeleNav Software for critical navigation in areas where the well-being or survival of you or others is dependent on the accuracy of navigation, as the maps or functionality of the TeleNav Software are not intended to support such high risk applications, especially in more remote geographical areas.
- TELENAV EXPRESSLY DISCLAIMS AND EXCLUDES ALL WARRANTIES IN CONNECTION WITH THE TELENAV SOFTWARE, WHETHER STATUTORY, EXPRESS OR IMPLIED, INCLUDING ALL WARRANTIES WHICH MAY ARISE FROM COURSE OF DEALING, CUSTOM OR TRADE AND INCLUDING, BUT NOT LIMITED TO, THE IMPLIED WARRANTIES OF MERCHANTABILITY, FITNESS FOR A PARTICULAR PURPOSE AND NON-INFRINGEMENT OF THIRD PARTY RIGHTS WITH RESPECT TO THE TELENAV SOFTWARE.
- Certain jurisdictions do not permit the disclaimer of certain warranties, so this limitation may not apply to you.

5. Limitation of Liability

- TO THE EXTENT PERMITTED UNDER APPLICABLE LAW, UNDER NO CIRCUMSTANCES SHALL TELENAV OR ITS LICENSORS AND SUPPLIERS BE LIABLE TO YOU OR TO ANY THIRD PARTY FOR ANY INDIRECT, INCIDENTAL, CONSEQUENTIAL, SPECIAL OR EXEMPLARY DAMAGES (INCLUDING IN EACH CASE, BUT NOT LIMITED TO, DAMAGES FOR THE INABILITY TO USE THE EQUIPMENT OR ACCESS DATA, LOSS OF DATA, LOSS OF BUSINESS, LOSS OF PROFITS, BUSINESS INTERRUPTION OR THE LIKE) ARISING OUT OF THE USE OF OR INABILITY TO USE THE TELENAV SOFTWARE, EVEN IF TELENAV HAS BEEN ADVISED OF THE POSSIBILITY OF SUCH DAMAGES. NOTWITHSTANDING ANY DAMAGES THAT YOU MIGHT INCUR FOR ANY

REASON WHATSOEVER (INCLUDING, WITHOUT LIMITATION, ALL DAMAGES REFERENCED HEREIN AND ALL DIRECT OR GENERAL DAMAGES IN CONTRACT, TORT (INCLUDING NEGLIGENCE) OR OTHERWISE), THE ENTIRE LIABILITY OF TELENAV AND OF ALL OF TELENAV'S SUPPLIERS SHALL BE LIMITED TO THE AMOUNT ACTUALLY PAID BY YOU FOR THE TELENAV SOFTWARE. SOME STATES AND/OR JURISDICTIONS DO NOT ALLOW THE EXCLUSION OR LIMITATION OF INCIDENTAL OR CONSEQUENTIAL DAMAGES, SO THE ABOVE LIMITATIONS OR EXCLUSIONS MAY NOT APPLY TO YOU.

6. Arbitration and Governing Law

- You agree that any dispute, claim or controversy arising out of or relating to this Agreement or the TeleNav Software shall be settled by independent arbitration involving a neutral arbitrator and administered by the American Arbitration Association in the County of Santa Clara, California. The arbitrator shall apply the Commercial Arbitration Rules of the American Arbitration Association, and the judgment upon the award rendered by the arbitrator may be entered by any court having jurisdiction. Note that there is no judge or jury in an arbitration proceeding and the decision of the arbitrator shall be binding upon both parties. You expressly agree to waive your right to a jury trial. This Agreement and performance hereunder will be governed by and construed in accordance with the laws of the State of California, without giving effect to its conflict of law provisions. To the extent judicial action is necessary in connection with the binding arbitration, both TeleNav and you agree to submit to the exclusive jurisdiction of the courts of the County of Santa Clara, California. The United Nations Convention on Contracts for the International Sale of Goods shall not apply.

7. Assignment

- You may not resell, assign, or transfer this Agreement or any of your rights or obligations, except in totality, in connection with your permanent transfer of the TeleNav Software, and expressly conditioned upon the new user of the TeleNav Software agreeing to be bound by the terms and conditions of this Agreement. Any such sale, assignment or transfer that is not expressly permitted under this paragraph will result in immediate termination of this Agreement, without liability to TeleNav, in which case you and all other parties shall immediately cease all use of the TeleNav Software. Notwithstanding the foregoing, TeleNav may assign this Agreement to any other party at any time without notice, provided the assignee remains bound by this Agreement.

8. Miscellaneous

8.1

This Agreement constitutes the entire agreement between TeleNav and you with respect to the subject matter hereof.

8.2

Except for the limited licenses expressly granted in this Agreement, TeleNav retains all right, title and interest in and to the TeleNav Software, including without limitation all related intellectual property rights. No licenses or other rights which are not expressly granted in this Agreement are intended to, or shall be, granted or

conferred by implication, statute, inducement, estoppel or otherwise, and TeleNav and its suppliers and licensors hereby reserve all of their respective rights other than the licenses explicitly granted in this Agreement.

8.3

By using the TeleNav Software, you consent to receive from TeleNav all communications, including notices, agreements, legally required disclosures or other information in connection with the TeleNav Software (collectively, "Notices") electronically. TeleNav may provide such Notices by posting them on TeleNav's Website or by downloading such Notices to your wireless device. If you desire to withdraw your consent to receive Notices electronically, you must discontinue your use of the TeleNav Software.

8.4

TeleNav's or your failure to require performance of any provision shall not affect that party's right to require performance at any time thereafter, nor shall a waiver of any breach or default of this Agreement constitute a waiver of any subsequent breach or default or a waiver of the provision itself.

8.5

If any provision herein is held unenforceable, then such provision will be modified to reflect the intention of the parties, and the remaining provisions of this Agreement will remain in full force and effect.

8.6

The headings in this Agreement are for convenience of reference only, will not be deemed to be a part of this Agreement, and will not be referred to in connection with the construction or interpretation of this Agreement. As used in this Agreement, the words "include" and "including" and variations thereof, will not be deemed to be terms of limitation, but rather will be deemed to be followed by the words "without limitation".

9. Other Vendors Terms and Conditions

- The Telenav Software utilizes map and other data licensed to Telenav by third party vendors for the benefit of you and other end users. This Agreement includes end-user terms applicable to these companies (included at the end of this Agreement), and thus your use of the Telenav Software is also subject to such terms. You agree to comply with the following additional terms and conditions, which are applicable to Telenav's third party vendor licensors.

9.1 End User Terms Required by HERE North America, LLC

The data ("Data") is provided for your personal, internal use only and not for resale. It is protected by copyright, and is subject to the following terms and conditions which are agreed to by you, on the one hand, and Telenav ("Telenav") and its licensors (including their licensors and suppliers) on the other hand.

© 2013 HERE. All rights reserved.

The Data for areas of Canada includes information taken with permission from Canadian authorities, including: © Her Majesty the Queen in Right of Canada, © Queen's Printer for Ontario, © Canada Post Corporation, GeoBase®, © Department of Natural Resources Canada.

HERE holds a non-exclusive license from the United States Postal Service® to publish and sell ZIP+4® information.

©United States Postal Service® 2014. Prices are not established, controlled or approved by the United States Postal Service®. The following trademarks and registrations are owned by the USPS: United States Postal Service, USPS, and ZIP+4

The Data for Mexico includes certain data from Instituto Nacional de Estadística y Geografía.

9.2 End User Terms Required by NAV2 (Shanghai) Co., Ltd

The data ("Data") is provided for your personal, internal use only and not for resale. It is protected by copyright, and is subject to the following terms and conditions which are agreed to by you, on the one hand, and NAV2 (Shanghai) Co., Ltd ("NAV2") and its licensors (including their licensors and suppliers) on the other hand. 20xx. All rights reserved

Terms and Conditions

Permitted Use. You agree to use this Data together with the Telenav Software solely for the internal business and personal purposes for which you were licensed, and not for service bureau, time-sharing or other similar purposes. Accordingly, but subject to the restrictions set forth in the following paragraphs, you agree not to otherwise reproduce, copy, modify, decompile, disassemble, create any derivative works of, or reverse engineer any portion of this Data, and may not transfer or distribute it in any form, for any purpose, except to the extent permitted by mandatory laws.

Restrictions. Except where you have been specifically licensed to do so by Telenav, and without limiting the preceding paragraph, you may not use this Data (a) with any products, systems, or applications installed or otherwise connected to or in communication with vehicles, capable of vehicle navigation, positioning, dispatch, real time route guidance, fleet management or similar applications; or (b) with or in communication with any positioning devices or any mobile or wireless-connected electronic or computer devices, including without limitation cellular phones, palmtop and handheld computers, pagers, and personal digital assistants or PDAs.

Warning. The Data may contain inaccurate or incomplete information due to the passage of time, changing circumstances, sources used and the nature of collecting comprehensive geographic data, any of which may lead to incorrect results.

No Warranty. This Data is provided to you "as is," and you agree to use it at your own risk. Telenav and its licensors (and their licensors and suppliers) make no guarantees, representations or warranties of any kind, express or implied, arising by law or otherwise, including but not limited to, content, quality, accuracy, completeness, effectiveness, reliability, fitness for a particular purpose, usefulness, use or results to be obtained from this Data, or that the Data or server will be uninterrupted or error-free.

Disclaimer of Warranty: TELENAV AND ITS LICENSORS (INCLUDING THEIR LICENSORS AND SUPPLIERS) DISCLAIM ANY WARRANTIES, EXPRESS OR IMPLIED, OF QUALITY, PERFORMANCE, MERCHANTABILITY, FITNESS FOR A

PARTICULAR PURPOSE OR NON-INFRINGEMENT. Some States, Territories and Countries do not allow certain warranty exclusions, so to that extent the above exclusion may not apply to you.

Disclaimer of Liability: TELENAV AND ITS LICENSORS (INCLUDING THEIR LICENSORS AND SUPPLIERS) SHALL NOT BE LIABLE TO YOU: IN RESPECT OF ANY CLAIM, DEMAND OR ACTION, IRRESPECTIVE OF THE NATURE OF THE CAUSE OF THE CLAIM, DEMAND OR ACTION ALLEGING ANY LOSS, INJURY OR DAMAGES, DIRECT OR INDIRECT, WHICH MAY RESULT FROM THE USE OR POSSESSION OF THE INFORMATION; OR FOR ANY LOSS OF PROFIT, REVENUE, CONTRACTS OR SAVINGS, OR ANY OTHER DIRECT, INDIRECT, INCIDENTAL, SPECIAL OR CONSEQUENTIAL DAMAGES ARISING OUT OF YOUR USE OF OR INABILITY TO USE THIS INFORMATION, ANY DEFECT IN THE INFORMATION, OR THE BREACH OF THESE TERMS OR CONDITIONS, WHETHER IN AN ACTION IN CONTRACT OR TORT OR BASED ON A WARRANTY, EVEN IF TELENAV OR ITS LICENSORS HAVE BEEN ADVISED OF THE POSSIBILITY OF SUCH DAMAGES. Some States, Territories and Countries do not allow certain liability exclusions or damages limitations, so to that extent the above may not apply to you.

Export Control. You shall not export from anywhere any part of the Data or any direct product thereof except in compliance with, and with all licenses and approvals required under, applicable export laws, rules and regulations, including but not limited to the laws, rules and regulations administered by the Office of Foreign Assets Control of the U.S. Department of Commerce and the Bureau of Industry and Security of the U.S. Department of Commerce. To the extent that any such export laws, rules or regulations prohibit HERE from complying with any of its obligations hereunder to deliver or distribute Data, such failure shall be excused and shall not constitute a breach of this Agreement.

Entire Agreement. These terms and conditions constitute the entire agreement between Telenav (and its licensors, including their licensors and suppliers) and you pertaining to the subject matter hereof, and supersedes in their entirety any and all written or oral agreements previously existing between us with respect to such subject matter.

Governing Law. The above terms and conditions shall be governed by the laws of the State of Illinois [insert “Netherlands” where European HERE Data is used], without giving effect to (i) its conflict of laws provisions, or (ii) the United Nations Convention for Contracts for the International Sale of Goods, which is explicitly excluded. You agree to submit to the jurisdiction of the State of Illinois [insert “The Netherlands” where European HERE Data is used] for any and all disputes, claims and actions arising from or in connection with the Data provided to you hereunder.

Government End Users. If the Data is being acquired by or on behalf of the United States government or any other entity seeking or applying rights similar to those customarily claimed by the United States government, this Data is a “commercial item” as that term is defined at 48 C.F.R. (“FAR”) 2.101, is licensed in accordance with these End-User Terms, and each copy of Data delivered or otherwise furnished shall be marked and embedded as appropriate with the following “Notice of Use,” and shall be treated in accordance with such Notice:

NOTICE OF USE
CONTRACTOR (MANUFACTURER/ SUPPLIER) NAME: HERE
CONTRACTOR (MANUFACTURER/ SUPPLIER) ADDRESS: c/o Nokia, 425 West Randolph Street, Chicago, Illinois 60606
This Data is a commercial item as defined in FAR 2.101 and is subject to these End-User Terms under which this Data was provided.
© 1987 – 2014 HERE – All rights reserved.

If the Contracting Officer, federal government agency, or any federal official refuses to use the legend provided herein, the Contracting Officer, federal government agency, or any federal official must notify HERE prior to seeking additional or alternative rights in the Data.

I. US/Canada Territory

A. United States Data. The End-User Terms for any Application containing Data for the United States shall contain the following notices:

"HERE holds a non-exclusive license from the United States Postal Service® to publish and sell ZIP+4® information."

"©United States Postal Service® 20XX. Prices are not established, controlled or approved by the United States Postal Service®. The following trademarks and registrations are owned by the USPS: United States Postal Service, USPS, and ZIP+4."

B. Canada Data. The following provisions apply to the Data for Canada, which may include or reflect data from third party licensors ("Third Party Data"), including Her Majesty the Queen in Right of Canada ("Her Majesty"), Canada Post Corporation ("Canada Post") and the Department of Natural Resources of Canada ("NRCan"):

1. Disclaimer and Limitation: Client agrees that its use of the Third Party Data is subject to the following provisions:

a. Disclaimer: The Third Party Data is licensed on an "as is" basis. The licensors of such data, including Her Majesty, Canada Post and NRCan, make no guarantees, representations or warranties respecting such data, either express or implied, arising by law or otherwise, including but not limited to, effectiveness, completeness, accuracy or fitness for a particular purpose.

b. Limitation on Liability: The Third Party Data licensors, including Her Majesty, Canada Post and NRCan, shall not be liable: (i) in respect of any claim, demand or action, irrespective of the nature of the cause of the claim, demand or action alleging any loss, injury or damages, direct or indirect, which may result from the use or possession of such Data; or (ii) in any way for loss of revenues or contracts, or any other consequential loss of any kind resulting from any defect in the Data.

2. Copyright Notice: In connection with each copy of all or any portion of the Data for the Territory of Canada, Client shall affix in a conspicuous manner the following copyright notice on at least one of: (i) the label for the storage media of the copy; (ii) the packaging for the copy; or (iii) other materials packaged with the copy, such as user manuals or end user license agreements: "This data includes information taken with permission from Canadian authorities, including © Her Majesty the Queen in Right of Canada, © Queen's Printer for Ontario, © Canada Post Corporation, GeoBase®, © The Department of Natural Resources Canada. All rights reserved."

3. End-User Terms: Except as otherwise agreed by the parties, in connection with the provision of any portion of the Data for the Territory of Canada to End-Users as may be authorized under the Agreement, Client shall provide such End-Users, in a reasonably conspicuous manner, with terms (set forth with other end user terms required to be provided under the Agreement, or as otherwise may be provided, by Client) which shall include the following provisions on behalf of the Third Party Data licensors, including Her Majesty, Canada Post and NRCan:

The Data may include or reflect data of licensors, including Her Majesty the Queen in the Right of Canada ("Her Majesty"), Canada Post Corporation ("Canada Post") and the Department of Natural Resources Canada ("NRCan"). Such data is licensed on an "as is" basis. The licensors, including Her Majesty, Canada Post and NRCan, make no guarantees, representations or warranties respecting such data, either express or implied, arising by law or otherwise, including but not limited to, effectiveness, completeness, accuracy or fitness for a particular purpose. The licensors, including Her Majesty, Canada Post and NRCan, shall not be liable in respect of any claim, demand or action, irrespective of the nature of the cause of the claim, demand or action alleging any loss, injury or damages, direct or indirect, which may result from the use or possession of the data or the Data. The licensors, including Her Majesty, Canada Post and NRCan, shall not be liable in any way for loss of revenues or contracts, or any other consequential loss of any kind resulting from any defect in the data or the Data.
End User shall indemnify and save harmless the licensors, including Her Majesty, Canada Post and NRCan, and their officers, employees and agents from and against any claim, demand or action, irrespective of the nature of the cause of the claim, demand or action, alleging loss, costs, expenses, damages or injuries (including injuries resulting in death) arising out of the use or possession of the data or the Data.

4. Additional Provisions: The terms contained in this Section are in addition to all of the rights and obligations of the parties under the Agreement. To the extent that any of the provisions of this Section are inconsistent with, or conflict with, any other provisions of the Agreement, the provisions of this Section shall prevail.

II. Mexico. The following provision applies to the Data for Mexico, which includes certain data from the Instituto Nacional de Estadística y Geografía ("INEGI"):

A. Any and all copies of the Data and/or packaging containing Data for Mexico shall contain the following notice: "Fuente: INEGI (Instituto Nacional de Estadística y Geografía)"

III. Latin America Territory

A. Third Party Notices. Any and all copies of the Data and/or packaging relating thereto shall include the respective Third Party Notices set forth below and used as described below corresponding to the Territory (or portion thereof) included in such copy:

Territory	Notice
Argentina	IGN "INSTITUTO GEOGRAFICO NACIONAL ARGENTINO"
Ecuador	"INSTITUTO GEOGRAFICO MILITAR DEL ECUADOR AUTORIZACION Nº IGM-2011-01- PCO-01 DEL 25 DE ENERO DE 2011" "source: © IGN 2009 - BD TOPO ®"
Guadeloupe, French Guiana and Martinique	
Mexico	"Fuente: INEGI (Instituto Nacional de Estadística y Geografía)"

IV. Middle East Territory

A. Third Party Notices. Any and all copies of the Data and/or packaging relating thereto shall include the respective Third Party Notices set forth below and used as described below corresponding to the Territory (or portion thereof) included in such copy:

Country	Notice
Jordan	"© Royal Jordanian Geographic Centre". The foregoing notice requirement for Jordan Data is a material term of the Agreement. If Client or any of its permitted sublicensees (if any) fail to meet such requirement, HERE shall have the right to terminate Client's license with respect to the Jordan Data.

B. Jordan Data. Client and its permitted sublicensees (if any) are restricted from licensing and/or otherwise distributing HERE's database for the country of Jordan ("Jordan Data") for use in Enterprise Applications to (i) non-Jordanian entities for use of the Jordan Data solely in Jordan or (ii) Jordan-based customers. In addition, Client, its permitted sublicensees (if any) and End-Users are restricted from using the Jordan Data in Enterprise Applications if such party is (i) a non-Jordanian entity using the Jordan Data solely in Jordan or (ii) a Jordan-based customer. For purposes of the foregoing, "Enterprise Applications" shall mean Geomarketing applications, GIS applications, mobile business asset management applications, call center applications, telematics applications, public organization Internet applications or for providing geocoding services.

V. Europe Territory

A. Use of Certain Traffic Codes in Europe

1. General Restrictions Applicable to Traffic Codes. Client acknowledges and agrees that in certain countries of the Europe Territory, Client will need to obtain rights directly from third party RDS-TMC code providers to receive and use the Traffic Codes in the Data and to deliver to End-Users Transactions in any way derived from or based on such Traffic Codes. For such countries, HERE shall deliver the Data incorporating Traffic Codes to Client only after receiving certification from Client of its having obtained such rights.

2. Display of Third Party Rights Legends for Belgium. Client shall, for each Transaction that uses Traffic Codes for Belgium, provide the following notice to the End-User: "Traffic Codes for Belgium are provided by the Ministerie van de Vlaamse Gemeenschap and the Ministèrie de l'Equipement et des Transports."

B. Paper Maps. With respect to any license granted to Client relating to making, selling or distributing paper maps (i.e., a map fixed on a paper or paper-like medium): (a) such license with respect to Data for the Territory of Great Britain is conditioned on Client's entering into and complying with a separate written agreement with the Ordnance Survey ("OS") to create and sell paper maps, Client's paying to the OS any and all applicable paper map royalties, and Client's complying with the OS copyright notice requirements; (b) such license for selling or otherwise distributing for charge with respect to Data for the Territory of Czech Republic is conditioned on Client's obtaining prior written consent from Kartografie a.s.; (c) such license for selling or distributing with respect to Data for the Territory of Switzerland is conditioned on Client's obtaining a permit from Bundesamt für Landestopografie of Switzerland; (d) Client is restricted from using Data for the Territory of France to create paper maps with a scale between 1:5,000 and 1:250,000; and (e) Client is restricted from using any Data to create, sell or distribute paper maps that are the same or substantially similar, in terms of data content and specific use of color, symbols and scale, to paper maps published by the European national mapping agencies, including without limitation, Landervermessungämter of Germany, Topografische Dienst of the Netherlands, Nationaal Geografisch Instituut of Belgium, Bundesamt für Landestopografie of Switzerland, Bundesamt für Eich-und Vermessungswesen of Austria, and the National Land Survey of Sweden.

C. OS Enforcement. Without limiting Section IV(B) above, with respect to Data for the Territory of Great Britain, Client acknowledges and agrees that the Ordnance Survey ("OS") may bring a direct action against Client to enforce compliance with the OS copyright notice (see Section IV(D) below) and paper map requirements (see Section IV(B) above) contained in this Agreement.

D. Third Party Notices. Any and all copies of the Data and/or packaging relating thereto shall include the respective Third Party Notices set forth below and used as described below corresponding to the Territory (or portion thereof) included in such copy:

Country(ies) Notice

Austria	"© Bundesamt für Eich- und Vermessungswesen"
Croatia Cyprus, Estonia, Latvia, Lithuania, Moldova, Poland, Slovenia and/or Ukraine	"© EuroGeographics"
France	"source: © IGN 2009 – BD TOPO ®"
Germany	"Die Grundlagendaten wurden mit Genehmigung der zuständigen Behörden entnommen"
Great Britain	"Contains Ordnance Survey data © Crown copyright and database right 2010 Contains Royal Mail data © Royal Mail copyright and database right 2010"
Greece	"Copyright Geomatics Ltd."
Hungary	"Copyright © 2003; Top-Map Ltd."
Italy	"La Banca Dati Italiana è stata prodotta usando quale riferimento anche cartografia numerica ed al tratto prodotta e fornita dalla Regione Toscana."
Norway	"Copyright © 2000; Norwegian Mapping Authority"
Portugal	"Source: IgeoE – Portugal"
Spain	"Información geográfica propiedad del CNIG"
Sweden	"Based upon electronic data © National Land Survey Sweden."
Switzerland	"Topografische Grundlage: © Bundesamt für Landestopographie.

E. Respective Country Distribution. Client acknowledges that HERE has not received approvals to distribute map data for the following countries in such respective countries: Albania, Belarus, Kyrgyzstan, Moldova and Uzbekistan. HERE may update such list from time to time. The license rights granted to Client under this TL with respect to the Data for such countries are contingent upon Client's compliance with all applicable laws and regulations, including, without limitation, any required licenses or approvals to distribute the Application incorporating such Data in such respective countries.

VI. Australia Territory

A. Third Party Notices. Any and all copies of the Data and/or packaging relating thereto shall include the respective Third Party Notices set forth below and used as described below corresponding to the Territory (or portion thereof) included in such copy:

Copyright. Based on data provided under license from PSMA Australia Limited (www.psma.com.au).

Product incorporates data which is © 20XX Telstra Corporation Limited, GM Holden Limited, Intelematics Australia Pty Ltd and Continental Pty Ltd.

B. Third Party Notices for Australia. In addition to the foregoing, the End-User Terms for any Application containing RDS-TMC Traffic Codes for Australia shall contain the following notice: "Product incorporates traffic location codes which is © 20XX Telstra Corporation Limited and its licensors."

AT&T Vehicle Network Carrier Telematics Disclosure

END USER FOR PURPOSES OF THIS SECTION MEANS YOU AND YOUR HEIRS, EXECUTORS, LEGAL PERSONAL REPRESENTATITVES AND PERMITED ASSIGNS. FOR PURPOSES OF THIS SECTION "UNDERLYING WIRELESS SERVICE CARRIER" INCLUDES ITS AFFILIATES AND CONTRACTORS AND THEIR RESPECTIVE OFFICERS, DIRECTORS, EMPLOYEES, SUCCESSORS AND ASSIGNS. END USER HAS NO CONTRACTUAL RELATIONSHIP WITH THE UNDERLYING WIRELESS SERVICE CARRIER AND END USER IS NOT A THIRD PARTY BENEFICIARY OF ANY AGREEMENT BETWEEN FORD AND UNDERLYING CARRIER. END USER UNDERSTANDS AND AGREES THAT THE UNDERLYING CARRIER HAS NO LEGAL, EQUITABLE, OR OTHER LIABILITY OF ANY KIND TO END USER. IN ANY EVENT, REGARDLESS OF THE FORM OF THE ACTION, WHETHER FOR BREACH OF CONTRACT, WARRANTY, NEGLIGENCE, STRICT LIABILITY IN TORT OR OTHERWISE, END USER'S EXCLUSIVE REMEDY FOR CLAIMS ARISING IN ANY WAY IN CONNECTION WITH THIS AGREEMENT, FOR ANY CAUSE WHATSOEVER, INCLUDING BUT NOT LIMITED TO ANY FAILURE OR DISRUPTION OF SERVICE PROVIDED HEREUNDER, IS LIMITED TO PAYMENT OF DAMAGES IN AN AMOUNT NOT TO EXCEED THE AMOUNT PAID BY END USER FOR THE SERVICES DURING THE TWO-MONTH PERIOD PRECEDING THE DATE THE CLAIM AROSE.

(ii) END USER AGREES TO INDEMNIFY AND HOLD HARMLESS THE UNDERLYING WIRELESS SERVICE CARRIER AND ITS OFFICERS, EMPLOYEES, AND AGENTS AGAINST ANY AND ALL CLAIMS, INCLUDING WITHOUT LIMITATION CLAIMS FOR LIBEL, SLANDER, OR ANY PROPERTY DAMAGE, PERSONAL INJURY OR DEATH, ARISING IN ANY WAY, DIRECTLY OR INDIRECTLY, IN CONNECTION WITH THIS AGREEMENT OR THE USE, FAILURE TO USE, OR INABILITY TO USE THE DEVICE EXCEPT WHERE THE CLAIMS RESULT FROM THE UNDERLYING CARRIER'S GROSS NEGLIGENCE OR WILLFUL MISCONDUCT. THIS INDEMNITY WILL SURVIVE THE TERMINATION OF THE AGREEMENT.

(iii) END USER HAS NO PROPERTY RIGHT IN ANY NUMBER ASSIGNED TO THE DEVICE.

(iv) END USER UNDERSTANDS THAT FORD AND THE UNDERLYING CARRIER CANNOT GUARANTY THE SECURITY OF WIRELESS TRANSMISSIONS, AND WILL NOT BE LIABLE FOR ANY LACK OF SECURITY RELATING TO THE USE OF THE SERVICES

THE SERVICE IS FOR [END USER'S] USE ONLY AND END USER MAY NOT RESELL THE SERVICE TO ANY OTHER PARTY END USER UNDERSTANDS THAT THE UNDERLYING CARRIER DOES NOT GUARANTEE ANY END USER UNINTERRUPTED SERVICE OR COVERAGE. THE UNDERLYING CARRIER DOES NOT WARRANT THAT END USERS CAN OR WILL BE LOCATED USING THE SERVICE. THE UNDERLYING CARRIER

MAKES NO WARRANTY, EXPRESS OR IMPLIED, OF MERCHANTABILITY OR FITNESS FOR A PARTICULAR PURPOSE, SUITABILITY, OR PERFORMANCE REGARDING ANY SERVICES OR GOODS, AND IN NO EVENT SHALL AT&T BE LIABLE, WHETHER OR NOT DUE TO ITS OWN NEGLIGENCE, FOR ANY: (A) ACT OR OMISSION OF A THIRD PARTY; (B) MISTAKES, OMISSIONS, INTERRUPTIONS, ERRORS, FAILURES TO TRANSMIT, DELAYS, OR DEFECTS IN THE SERVICE PROVIDED BY OR THROUGH THE UNDERLYING CARRIER; (C) DAMAGE OR INJURY CAUSED BY SUSPENSION OR TERMINATION BY THE UNDERLYING CARRIER; OR (D) DAMAGE OR INJURY CAUSED BY A FAILURE OR DELAY IN CONNECTING A CALL TO ANY ENTITY, INCLUDING 911 OR ANY OTHER EMERGENCY SERVICE. TO THE FULL EXTENT ALLOWED BY LAW, THE END USER RELEASES, INDEMNIFIES AND HOLDS THE UNDERLYING CARRIER HARMLESS FROM AND AGAINST ANY AND ALL CLAIMS OF ANY PERSON OR ENTITY FOR DAMAGES OF ANY NATURE ARISING IN ANY WAY FROM OR RELATING TO, DIRECTLY OR INDIRECTLY, SERVICES PROVIDED BY THE UNDERLYING CARRIER OR ANY PERSON'S USE THEREOF, INCLUDING CLAIMS ARISING IN WHOLE OR IN PART FROM THE ALLEGED NEGLIGENCE OF THE UNDERLYING CARRIER.

VII. China Territory

Personal Use Only

You agree to use this Data together with [insert name of Client Application] for the solely personal, non-commercial purposes for which you were licensed, and not for service bureau, time-sharing or other similar purposes. Accordingly, but subject to the restrictions set forth in the following paragraphs, you may copy this Data only as necessary for your personal use to (i) view it, and (ii) save it, provided that you do not remove any copyright notices that appear and do not modify the Data in any way. You agree not to otherwise reproduce, copy, modify, decompile, disassemble or reverse engineer any portion of this Data, and may not transfer or distribute it in any form, for any purpose, except to the extent permitted by mandatory laws.

Restrictions

Except where you have been specifically licensed to do so by NAV2 , and without limiting the preceding paragraph, you may not (a) use this Data with any products, systems, or applications installed or otherwise connected to or in communication with vehicles, capable of vehicle navigation, positioning, dispatch, real time route guidance, fleet management or similar applications; or (b) with or in communication with any positioning devices or any mobile or wireless-connected electronic or computer devices, including without limitation cellular phones, palmtop and handheld computers, pagers, and personal digital assistants or PDAs. You agree to cease using this Data if you fail to comply with these terms and conditions.

Limited Warranty

NAV2 warrants that (a) the Data will perform substantially in accordance with the accompanying written materials for a period of ninety (90) days from the date of receipt, and (b) any support services provided by NAV2 shall be substantially as described in applicable written materials provided to you by NAV2, and NAV2's support engineers will make commercially reasonable efforts to solve any problem issues.

Customer Remedies

NAV2 and its suppliers' entire liability and your exclusive remedy shall be, at NAV2's sole discretion, either (a) return of the price paid, if any, or (b) repair or replacement of the Data that do not meet NAV2's Limited Warranty and that are returned to NAV2 with a copy of your receipt. This Limited Warranty is void if failure of the Data has resulted from accident, abuse, or misapplication. Any replacement Data will be warranted for the remainder of the original warranty period or thirty (30) days, whichever is longer. Neither these remedies nor any product support services offered by NAV2 are available without proof of purchase from an authorized international source.

No Other Warranty:

EXCEPT FOR THE LMITED WARRANTY SET FORTH ABOVE AND TO THE EXTENT PERMITTED BY APPLICABLE LAW, NAV2 AND ITS LICENSORS (INCLUDING THEIR LICENSORS AND SUPPLIERS) DISCLAIM ANY WARRANTIES, EXPRESS OR IMPLIED, OF QUALITY, PERFORMANCE, MERCHANTABILITY, FITNESS FOR A PARTICULAR PURPOSE, OWNERSHIP OR NON-INFRINGEMENT. Certain warranty exclusions may not be permitted under applicable law, so to that extent the above exclusion may not apply to you.

Limited Liability:

TO THE EXTENT PERMITTED BY APPLICABLE LAW, NAV2 AND ITS LICENSORS (INCLUDING THEIR LICENSORS AND SUPPLIERS) SHALL NOT BE LIABLE TO YOU: IN RESPECT OF ANY CLAIM, DEMAND OR ACTION, IRRESPECTIVE OF THE NATURE OF THE CAUSE OF THE CLAIM, DEMAND OR ACTION ALLEGING ANY LOSS, INJURY OR DAMAGES, DIRECT OR INDIRECT, WHICH MAY RESULT FROM THE USE OR POSSESSION OF THE INFORMATION; OR FOR ANY LOSS OF PROFIT, REVENUE, CONTRACTS OR SAVINGS, OR ANY OTHER DIRECT, INDIRECT, INCIDENTAL, SPECIAL OR CONSEQUENTIAL DAMAGES ARISING OUT OF YOUR USE OF OR INABILITY TO USE THIS INFORMATION, ANY DEFECT IN THE INFROMATION, OR THE BREACH OF THESE TERMS OR CONDITIONS, WHETHER IN AN ACTION IN CONTRACT OR TORT OR BASED ON A WARRANTY, EVEN IF NAV2 OR ITS LICENSORS HAVE BEEN ADVISED OF THE POSSIBILITY OF SUCH DAMAGES. UNDER NO CIRCUMSTANCES SHALL NAV2's OR ITS SUPPLIERS' LIABILITY HEREUNDER EXCEED THE PRICE PAID. Certain liability exclusions may not be permitted under applicable law, so to that extent the above exclusion may not apply to you.

Export Control

You agree not to export to anywhere any part of the Data provided to you or any direct product thereof except in compliance with, and with all licenses and approvals required under, applicable export laws, rules and regulations.

IP Protection

The Data are owned by NAV2 or its suppliers and are protected by applicable copyright and other intellectual property law and treaties. The Data are provided solely on the basis of a license to use, not sale.

Entire Agreement

These terms and conditions constitute the entire agreement between NAV2(and its licensors, including their licensors and suppliers) and you pertaining to the subject matter hereof, and supersedes in their entirety any and all written or oral agreements previously existing between us with respect to such subject matter.

Governing Law.

The above terms and conditions shall be governed by the laws of the People's Republic of China, without giving effect to (i) its conflict of laws provisions, or (ii) the United Nations Convention for Contracts for the International Sale of Goods, which is explicitly excluded. Any dispute arising from or in connection with the Data provided to you hereunder shall be submitted to the Shanghai International Economic and Trade Arbitration Commission for arbitration.

Gracenote® Copyright

CD and music-related data from Gracenote, Inc., copyright©

2000-2007 Gracenote. Gracenote Software, copyright © 2000-2007 Gracenote. This product and service may practice one or more of the following U.S. Patents 5,987,525; 6,061,680; 6,154,773; 6,161,132; 6,230,192; 6,230,207; 6.240,459; 6,330,593 and other patents issued or pending. Some services supplied under license from Open Globe, Inc. for U.S. Patent 6,304,523.

Gracenote and CDDB are registered trademarks of Gracenote. The Gracenote logo and logotype, and the "Powered by Gracenote™" logo are trademarks of Gracenote.

Gracenote® End User License Agreement (EULA)

This device contains software from Gracenote, Inc. of 2000 Powell Street Emeryville, California 94608 ("Gracenote").

The software from Gracenote (the "Gracenote Software") enables this device to do disc and music file identification and obtain music-related information, including name, artist, track, and title information ("Gracenote Data") from online servers ("Gracenote Servers"), and to perform other functions. You may use Gracenote Data only by means of the intended End User functions of this device. This device may contain content belonging to Gracenote's providers. If so, all of the restrictions set forth herein with respect to Gracenote Data shall also apply to such content and such content providers shall be entitled to all of the benefits and protections set forth herein that are available to Gracenote. You agree that you will use the content from Gracenote ("Gracenote Content") , Gracenote Data, the Gracenote Software, and Gracenote Servers for your own personal, non-commercial use only. You agree not to assign, copy, transfer or transmit the Gracenote Content, Gracenote Software or any Gracenote Data (except in a Tag associated with a music file) to any third party. YOU AGREE NOT TO USE OR EXPLOIT GRACENOTE CONTENT, GRACENOTE DATA, THE GRACENOTE SOFTWARE, OR GRACENOTE SERVERS, EXCEPT AS EXPRESSLY PERMITTED HEREIN.

You agree that your non-exclusive licenses to use the Gracenote Content, Gracenote Data, the Gracenote Software, and Gracenote Servers will terminate if you violate these restrictions. If your licenses terminate, you agree to cease any and all use of the Gracenote Content, Gracenote Data, the Gracenote Software, and Gracenote Servers.

Gracenote, respectively, reserve all rights in Gracenote Data, the Gracenote Software, and the Gracenote Servers and Gracenote Content, including all ownership rights. Under no circumstances will either Gracenote become liable for any payment to you for any information that you provide,

including any copyrighted material or music file information. You agree that Gracenote may enforce its respective rights, collectively or separately, under this agreement against you, directly in each company's own name.

Gracenote uses a unique identifier to track queries for statistical purposes. The purpose of a randomly assigned numeric identifier is to allow Gracenote to count queries without knowing anything about who you are. For more information, see the web page at www.gracenote.com for the Gracenote Privacy Policy.

THE GRACENOTE SOFTWARE, EACH ITEM OF GRACENOTE DATA AND THE GRACENOTE CONTENT ARE LICENSED TO YOU "AS IS". NEITHER GRACENOTE MAKES ANY REPRESENTATIONS OR WARRANTIES, EXPRESS OR IMPLIED, REGARDING THE ACCURACY OF ANY GRACENOTE DATA FROM THE GRACENOTE SERVERS OR GRACENOTE CONTENT. GRACENOTE COLLECTIVELY AND SEPARATELY RESERVE THE RIGHT TO DELETE DATA AND/OR CONTENT FROM THE COMPANIES' RESPECTIVE SERVERS OR, IN THE CASE OF GRACENOTE, CHANGE DATA CATEGORIES FOR ANY CAUSE THAT GRACENOTE DEEMS SUFFICIENT. NO WARRANTY IS MADE THAT EITHER GRACENOTE CONTENT OR THE GRACENOTE SOFTWARE OR GRACENOTE SERVERS ARE ERROR-FREE OR THAT THE FUNCTIONING OF THE GRACENOTE SOFTWARE OR GRACENOTE SERVERS WILL BE UNINTERRUPTED. GRACENOTE IS NOT OBLIGATED TO PROVIDE YOU WITH ANY ENHANCED OR ADDITIONAL DATA TYPES THAT GRACENOTE MAY CHOOSE TO PROVIDE IN THE FUTURE AND IS FREE TO DISCONTINUE ITS ONLINE SERVICES AT ANY TIME. GRACENOTE DISCLAIM ALL WARRANTIES EXPRESS OR IMPLIED, INCLUDING, BUT NOT LIMITED TO, IMPLIED WARRANTIES OF MERCHANTABILITY, FITNESS FOR A PARTICULAR PURPOSE, TITLE, AND NON-INFRINGEMENT. NEITHER GRACENOTE WARRANTS THE RESULTS THAT WILL BE OBTAINED BY YOUR USE OF THE GRACENOTE SOFTWARE OR ANY GRACENOTE SERVER. IN NO CASE WILL GRACENOTE BE LIABLE FOR ANY CONSEQUENTIAL OR INCIDENTAL DAMAGES OR FOR ANY LOST PROFITS OR LOST REVENUES FOR ANY REASON WHATSOEVER. © Gracenote 2007.

Taiwan Territory

According to the "Technical Specifications for Low Power Radio Frequency Equipment" formulated by the National Communications and Communication Committee of the Executive Yuan: 3.8.2. For the low-power radio frequency equipment that has obtained the verification certificate, the company, firm or user shall not change the frequency, increase the power or change the characteristics and functions of the original design without authorization.

The use of low-power radio frequency equipment must not affect flight safety and interfere with legal communications: when the system detects interference, immediately stop using it until there is no interference.

The aforementioned legal communication refers to the wireless communication operated in accordance with the provisions of the Telecommunications Management Law. Low-power radio frequency equipment needs to endure the interference of legal communication or industrial, scientific and medical radio wave radiation electrical equipment.

SUNA TRAFFIC CHANNEL – TERMS AND CONDITIONS

By activating, using and/or accessing the SUNA Traffic Channel, SUNA Predictive or other content or material provided by Intelematics (together, **SUNA Products and/or Services**), you must accept certain terms and conditions. The following is a brief summary of the terms and conditions that apply to you. To view the full terms and conditions relevant to your use of the SUNA Products and/or Services, please consult:

Website
www.sunatraffic.com.au/termsandconditions/

1. Acceptance

By using SUNA Products and/or Services, you will be deemed to have accepted and agreed to be bound by the terms and conditions fully detailed at:

Website
www.sunatraffic.com.au/termsandconditions/

2. Intellectual Property

SUNA Products and/or Services are for your personal use. You may not record, or retransmit the content, nor use the content in association with any other traffic information or route guidance service or device not approved by Intelematics. You obtain no right of ownership in any Intellectual Property Rights (including copyright) in the data that is used to provide SUNA Products and/or Services.

3. Appropriate Use

SUNA Products and/or Services are intended as an aid to personal motoring and travel planning, and do not provide comprehensive or accurate information on all occasions. On occasions, you may experience additional delay as a result of using SUNA Products and/or Services. You acknowledge that it is not intended, or suitable, for use in applications where time of arrival or driving directions may impact the safety of the public or yourself.

4. Use of SUNA Products and Services while driving

You, and other authorized drivers of the vehicle in which SUNA Products and/or Services are available or installed and active, remain at all times responsible for observing all relevant laws and codes of safe driving. In particular, you agree to only actively operate SUNA Products and/or Services when the Vehicle is at a complete stop and it is safe to do so.

5. Service Continuity and Reception of the SUNA Traffic Channel

We will use reasonable endeavors to provide the SUNA Traffic Channel 24 hours a day, 365 days a year. The SUNA Traffic Channel may occasionally be unavailable for technical reasons or for planned maintenance. We will try to perform maintenance at times when congestion is light. We reserve the right to withdraw SUNA Products and/or Services at any time.

Also, we cannot assure the uninterrupted reception of the SUNA Traffic Channel RDS-TMC signal at any particular location.

6. Limitation of Liability

Neither Intelematics (nor its suppliers or the manufacturer of your device (the "**Suppliers**")) shall be liable to you or to any third party for any damages either direct, indirect, incidental, consequential or otherwise arising out of the use of or inability to use SUNA Products and/or

Services even if Intelematics or a Supplier has been advised of the possibility of such damages. You also acknowledge that neither Intelematics nor any Supplier guarantees nor make any warranties that relate to the availability, accuracy or completeness of SUNA Products and/or Services, and to the extent which it is lawful to do so, both Intelematics and each Supplier excludes any warranties which might otherwise be implied by any State or Federal legislation in relation to SUNA Products and/or Services.

7. Please Note

Great care has been taken in preparing this manual. Constant product development may mean that some information is not entirely up-to-date. The information in this document is subject to change without notice.

CONVERTING OR MODIFYING YOUR VEHICLE

If converting or modifying your vehicle from production specification, refer to the Body and Equipment Mounting Manual at *https://www.fordpro-specialvehicles.com*.

ELECTROMAGNETIC COMPATIBILITY

WARNING: Do not place objects or mount equipment on or near the airbag cover, on the side of the front or rear seatbacks, or in areas that may come into contact with a deploying airbag. Failure to follow these instructions may increase the risk of personal injury in the event of a crash.

WARNING: Keep antenna and power cables at least 10 cm (4 in) from any electronic modules and airbags.

Note: *We test and certify your vehicle to meet electromagnetic compatibility legislation. It is your responsibility to make sure that any equipment an authorized dealer installs on your vehicle complies with applicable local legislation and other requirements. Installation of some aftermarket electronic devices could degrade the performance of vehicle functions, which use radio frequency signals such as broadcast radio receiver, tire pressure monitoring system, push button start,* ***Bluetooth****® connectivity or satellite navigation.*

Note: *Any radio frequency transmitter equipment in your vehicle, such as, cellular telephones and amateur radio transmitters, must keep to the parameters in the following illustrations and table. We do not provide any other special provisions or conditions for installations or use.*

Car

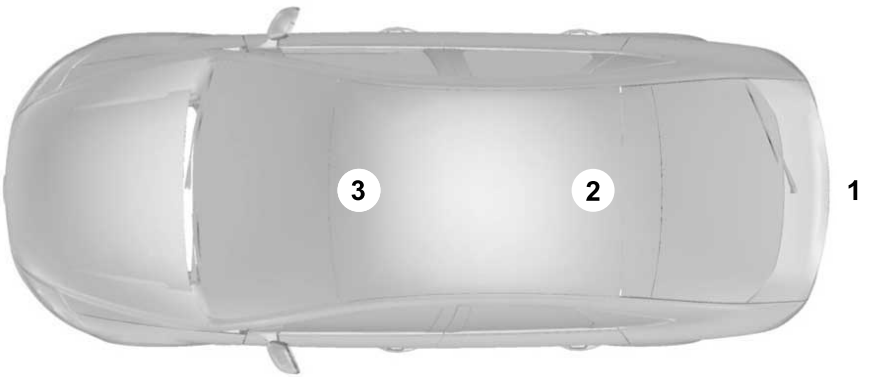

Van

Truck

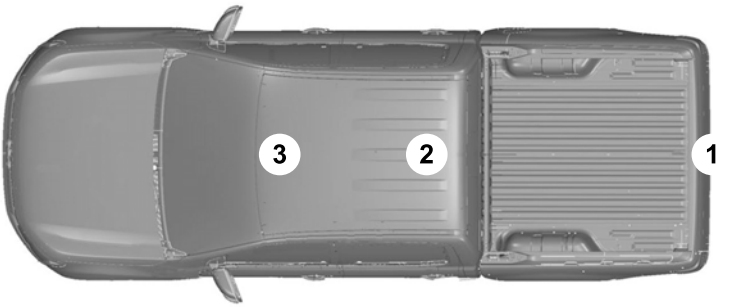

Frequency Band MHz	Maximum Output Power Watt (Peak RMS)	Antenna Positions
1-30	50	1
50-54	50	2, 3
68-88	50	2, 3
142-176	50	2, 3
380-512	50	2, 3
806-870	10	2, 3

1

12V Battery....494
12V Battery Precautions....494
Battery Management System Limitations....495
Changing the 12V Battery....495
How Does the Battery Management System Work....494
Recycling and Disposing of the 12V Battery....496
Resetting the Battery Sensor....496
What Is the Battery Management System....494
12V Battery – Troubleshooting....496
12V Battery – Information Messages....497
12V Battery – Warning Lamps....496

3

360 Degree Camera....315
360 Degree Camera Settings....317
360 Degree Camera Guide Lines....316
360 Degree Camera Precautions....315
360 Degree Camera Settings....317
Switching the 360 Degree Camera On and Off....317
Switching the 360 Degree Camera View....318

4

4WD
See: Four-Wheel Drive....258

A

A/C
See: Climate Control - Vehicles With: Automatic Temperature Control....140
See: Climate Control - Vehicles With: Manual Temperature Control....145
About This Publication....20
About Us....19
ABS
See: Brakes....274
Accessing Navigation....611
Accessing the Passive Key Backup Position....193
Accessing the Trip Computer....137
AC Charging....237
Charging at Home....237
Charging in Public....238
Adaptive Cruise Control....321
Adaptive Cruise Control – Troubleshooting....333
Intelligent Adaptive Cruise Control....332
Intelligent Adaptive Cruise Control – Troubleshooting....333
Lane Centering....328
Lane Centering – Troubleshooting....331
Adaptive Cruise Control Automatic Cancellation....324
Adaptive Cruise Control Indicators....328
Adaptive Cruise Control Limitations....322
Adaptive Cruise Control Precautions....321
Adaptive Cruise Control – Troubleshooting....333
Adaptive Cruise Control – Information Messages....333
Adaptive Front Lighting....109
How Does Adaptive Front Lighting Work....109
Switching Adaptive Front Lighting On and Off....110
Switching the Headlamps for Driving on the Left or Right-Hand Side of the Road....110
AdBlue® Capacity and Specification....226
AdBlue® Gauge - Diesel, Vehicles With: 12 Inch Screen....124
AdBlue® Gauge - Diesel, Vehicles With: 8 Inch Screen....124
Adjusting the Exterior Mirrors....117
Adjusting the Headlamps....497
Adjusting the Instrument Panel Lighting Brightness....112
Adjusting the Map....611
Changing the Format of the Map....611
Zooming the Map In and Out....611
Adjusting the Seatbelts During Pregnancy....60

Adjusting the Sound Settings.....596
Adjusting the Steering Wheel.....93
Adjusting the Volume.....595
After Driving Your Vehicle Off-Road.....443
Aid Mode.....358
How Does Aid Mode Work.....358
What Is Aid Mode.....358
Airbag Precautions.....65
Airbags.....63
Front Passenger Sensing System.....65
Air Conditioning
See: Climate Control - Vehicles With: Automatic Temperature Control.....140
See: Climate Control - Vehicles With: Manual Temperature Control.....145
Air Conditioning System Capacity and Specification - 2.0L Diesel, Vehicles With: R1234YF Refrigerant.....575
Air Conditioning System Capacity and Specification - 2.0L Diesel, Vehicles With: R134A Refrigerant.....575
Air Conditioning System Capacity and Specification - 3.0L Diesel.....578
Air Conditioning System Capacity and Specification - 3.0L EcoBoost™.....578
Air Conditioning System Capacity and Specification - Plug-In Hybrid Electric Vehicle (PHEV).....576
Alarm
See: Connecting a Trailer.....408
Alert and Aid Mode.....358
How Does Alert and Aid Mode Work.....358
What Is Alert and Aid Mode.....358
Alexa Built-In.....604
Alexa Built-In Requirements.....604
Alexa Built-In Settings.....604
Ambient Lighting.....112
Adjusting Ambient Lighting.....112
Switching Ambient Lighting On and Off.....112
Anti-Lock Braking System.....274
Anti-Lock Braking System Indicators.....274
Anti-Lock Braking System Limitations.....274
Anti-Theft Alarm System.....89
Arming the Anti-Theft Alarm System.....90
Disarming the Anti-Theft Alarm System.....90
How Does the Anti-Theft Alarm System Work.....89
What Are the Inclination Sensors.....89
What Are the Interior Sensors.....89
What Is the Anti-Theft Alarm System.....89
What Is the Battery Backup Alarm.....90
What Is the Perimeter Alarm.....89
Anti-Theft Alarm System Settings.....90
Setting the Alarm Security Level.....90
Switching Ask on Exit On and Off.....90
What are the Alarm Security Levels.....90
What Is Ask on Exit.....90
Appendices.....741
Applying the Electric Parking Brake - Automatic Transmission.....280
Applying the Electric Parking Brake in an Emergency.....281
Applying the Electric Parking Brake - Manual Transmission.....280
Applying the Parking Brake - Automatic Transmission.....278
Applying the Parking Brake - Manual Transmission.....278
Approach Detection
See: Switching Welcome Lighting On and Off.....103
Audio System.....595
Digital Audio Broadcasting Radio.....597
FM Radio.....596
Traffic Announcements.....598
Audio System Precautions.....595
Authorized Dealer Directory.....622
Auto-Dimming Interior Mirror.....116
Auto-Dimming Interior Mirror Limitations.....116
What Is the Auto-Dimming Interior Mirror.....116
Auto Hold.....289
Auto Hold Indicators.....289
Autolamps.....101
Autolamp Settings.....101
What Are Autolamps.....101
Automatically Releasing the Electric Parking Brake.....281

Ranger (TRA, TRB) Vehicles Built From: 01-11-2024, CG4010en enGBR, Edition date: 202407, DOM

Automatic Crash Shutoff.....454
Automatic Crash Shutoff Precautions.....454
Re-Enabling Your Vehicle.....454
What Is Automatic Crash Shutoff.....454
Automatic Emergency Braking.....380
Switching Automatic Emergency Braking On and Off.....380
What Is Automatic Emergency Braking.....380
Automatic Engine Stop.....192
How Does Automatic Engine Stop Work.....192
Overriding Automatic Engine Stop.....192
Switching Automatic Engine Stop On and Off.....192
What Is Automatic Engine Stop.....192
Automatic High Beam Control.....104
Automatic High Beam Control Indicators.....105
Automatic High Beam Control Limitations.....105
Automatic High Beam Control Precautions.....104
Automatic High Beam Control Requirements.....105
How Does Automatic High Beam Control Work.....104
Overriding Automatic High Beam Control.....105
Switching Automatic High Beam Control On and Off.....105
Automatic High Beam Control – Troubleshooting.....106
Automatic High Beam Control – Information Messages.....106
Automatic Return to Park (P).....255
Automatic Transmission Audible Warnings - Vehicles With: Electronic Shift.....257
Automatic Transmission Audible Warnings - Vehicles With: Mechanical Shift.....257
Automatic Transmission.....251
Automatic Transmission Positions.....251
Automatic Transmission Fluid Capacity and Specification.....581
Automatic Transmission Positions.....251
Automatic Transmission Position Indicators.....252
Automatic Transmission Precautions.....251
Drive (D).....252
Manual (M).....252
Neutral (N).....252
Park (P).....251
Reverse (R).....252
Shifting Your Vehicle Into Gear.....251
Auto Mode.....142
Auto Mode Indicators.....142
Switching Auto Mode On and Off.....142
Switching Dual Mode On and Off.....143
Autorelock.....81
How Does Autorelock Work.....81
Auto-Start-Stop.....201
Auto-Start-Stop – Troubleshooting.....203
Auto-Start-Stop Indicators.....202
Auto-Start-Stop Precautions - Automatic Transmission.....201
Auto-Start-Stop Precautions - Manual Transmission.....201
Auto-Start-Stop – Troubleshooting.....203
Auto-Start-Stop – Frequently Asked Questions.....204
Auto-Start-Stop – Information Messages.....203
Autounlock.....81
Autounlock Requirements.....81
Switching Autounlock On and Off.....81
What Is Autounlock.....81
Autowipers.....95
Adjusting the Sensitivity of the Rain Sensor.....96
Autowipers Settings.....95
What Are Autowipers.....95
Auxiliary Heater.....149
Auxiliary Heater Limitations.....149
Auxiliary Heater Precautions.....149
Auxiliary Switches.....619

B

Basic Off-Road Driving Techniques.....439

Battery Fuse Box....471
Accessing the Battery Fuse Box....471
Identifying the Fuses in the Battery Fuse Box....471
Locating the Battery Fuse Box....471
Blind Spot Assist....359
Blind Spot Assist Indicators....360
Blind Spot Assist Limitations....359
How Does Blind Spot Assist Work....359
What Is Blind Spot Assist....359
Blind Spot Assist with Trailer Coverage....361
Blind Spot Assist with Trailer Coverage Indicators....362
Blind Spot Assist with Trailer Coverage Limitations....362
How Does Blind Spot Assist with Trailer Coverage Work....361
What Is Blind Spot Assist with Trailer Coverage....361
Blind Spot Information System....367
Blind Spot Information System – Troubleshooting....371
Blind Spot Information System With Trailer Coverage....369
Blind Spot Information System Indicators....370
Blind Spot Information System Limitations....367
Blind Spot Information System Precautions....367
Blind Spot Information System Requirements....367
Blind Spot Information System – Troubleshooting....371
Blind Spot Information System – Information Messages....371
Blind Spot Information System – Warning Lamps....371
Blind Spot Information System With Trailer Coverage....369
Blind Spot Information System With Trailer Coverage Limitations....369
How Does Blind Spot Information System With Trailer Coverage Work....369
Selecting a Trailer....370
Setting a Trailer Length....370
Switching Blind Spot Information System With Trailer Coverage On and Off....369
What Is Blind Spot Information System with Trailer Coverage....369
Bluetooth®....610
Body Control Module Fuse Box....472
Accessing the Body Control Module Fuse Box....472
Identifying the Fuses in the Body Control Module Fuse Box....473
Locating the Body Control Module Fuse Box....472
Bonnet Lock
See: Opening and Closing the Hood....477
Booster Seats....58
Brake Coach - Plug-In Hybrid Electric Vehicle (PHEV)....135
Brake Fluid Specification....275
Brake Over Accelerator....274
Brake Precautions....274
Brakes....274
Anti-Lock Braking System....274
Brakes – Troubleshooting....275
Brakes – Troubleshooting....275
Brakes – Frequently Asked Questions....277
Brakes – Information Messages....276
Brakes – Warning Lamps....275
Brake System Inspection....476
Breaking-In....448

C

Canceling the Set Speed....297
Canceling the Set Speed Limit....351
Capacities and Specifications....555
Catalytic Converter....228
Catalytic Converter – Troubleshooting....228
Catalytic Converter Precautions....228
Catalytic Converter – Troubleshooting....228
Catalytic Converter – Warning Lamps....228
Center Console....186
Opening the Center Console....186
Center Display....599
Center Display Overview....599

Changing a Flat Tire - Excluding: Raptor....534
Changing a Flat Tire - Raptor....544
Changing a Road Wheel....534
Changing the Backup Battery....71
Changing the Fuel Filter - Diesel....492
Changing the Fuel Filter - Gasoline....492
Changing the Parking Heater Remote Control Battery....152
Changing the Remote Control Battery - Vehicles With: Flip Key....75
Changing the Remote Control Battery - Vehicles With: Push Button Start....73
Changing the Set Speed Limit....351
Changing the Vehicle Wi-Fi Hotspot Name or Password....593
Charge Coupler Manual Release....240
Charge Port Indicators....236
Charging a Device....170
Charging a Wireless Device....183
Charging Equipment Identification Symbols....246
Charging Equipment Indicators....234
Charging Equipment Overview....233
Charging Equipment Precautions....232
Charging Settings....241
Charging Your Vehicle....232
AC Charging....237
Charging Your Vehicle – Troubleshooting....247
Charging Your Vehicle – Troubleshooting....247
Charging Your Vehicle – Frequently Asked Questions....248
Charging Your Vehicle – Information Messages....247
Checking Local Hazard Information Status....350
Checking the Brake Fluid....274
Checking the Clutch Fluid Level....250
Checking the Coolant....485
Checking the Manual Transmission Fluid Level....250
Checking the Seatbelts....61
Checking the Selective Catalytic Reduction System Status....226
Checking the Tire Pressures....524
Checking the Wiper Blades....96
Child Restraint Anchor Points....48
Locating the Child Restraint Lower Anchor Points....48
Locating the Child Restraint Top Tether Anchor Points....48
What Are the Child Restraint Anchor Points....48
Child Restraints....49
Child Restraint Position Information....49
Child Restraints Recommendation....51
Child Safety....47
Child Restraint Anchor Points....48
Child Restraints....49
Installing Child Restraints....51
Child Safety Locks - Vehicles With: Mechanical Child Proof Locks....58
Child Safety Locks - Vehicles With: Remote Child Proof Locks....59
Child Safety Precautions....47
Cleaning the Exterior....509
Cleaning Camera Lenses and Sensors....510
Cleaning Chrome, Aluminium or Stainless Steel....509
Cleaning Headlamps and Rear Lamps....509
Cleaning Stripes or Graphics....510
Cleaning the Engine Compartment....510
Cleaning the Exterior Precautions....509
Cleaning the Roller Shutter....511
Cleaning the Underbody....510
Cleaning Wheels....509
Cleaning Windows and Wiper Blades....509
Cleaning the Interior....512
Cleaning Carpets and Floor Mats....513
Cleaning Displays and Screens....512
Cleaning Fabric....512
Cleaning Leather....512
Cleaning Plastic....512
Cleaning Seatbelts....513
Cleaning the Instrument Panel....512
Cleaning Vinyl....513
Climate Control....140
Auto Mode....142
Climate Control Hints....143
Climate Control – Warning Lamps....144

Clutch Fluid Capacity and Specification....250
Configuring the Trip Computer - Vehicles With: 8 Inch Screen....137
Connected Vehicle....590
Connected Vehicle – Troubleshooting....591
Connecting the Vehicle to a Mobile Network....590
Connected Vehicle Data....29
Connected Vehicle Limitations....590
Connected Vehicle Requirements....590
Connected Vehicle Settings....591
Connected Vehicle – Troubleshooting....591
Connected Vehicle – Frequently Asked Questions....591
Connecting a Bluetooth® Device....610
Connecting a Trailer....408
Connecting a Trailer – Troubleshooting....410
Tow Ball....407
Connecting a Trailer Precautions....407
Connecting a Trailer – Troubleshooting....410
Connecting a Trailer – Information Messages....410
Connecting the Vehicle to a Mobile Network....590
Connecting FordPass to the Modem....590
Enabling and Disabling the Modem....590
What Is the Modem....590
Connecting the Vehicle to a Wi-Fi Network....590
Connecting Your Phone....606
Converting or Modifying Your Vehicle....740
Cooling System Capacity and Specification - 2.0L Diesel....568
Cooling System Capacity and Specification - 2.3L EcoBoost™, Plug-In Hybrid Electric Vehicle (PHEV)....569
Cooling System Capacity and Specification - 3.0L Diesel....570
Cooling System Capacity and Specification - 3.0L EcoBoost™....570
Crash and Breakdown Information....450
Automatic Crash Shutoff....454
Fail-Safe Cooling....457
Jump Starting the Vehicle....451
Post-Crash Alert System....453
Post Impact Braking....453
Recovery Towing....454
Creating a Vehicle Wi-Fi Hotspot....593
Cross Traffic Alert....373
Cross Traffic Alert – Troubleshooting....375
Cross Traffic Alert Indicators....374
Cross Traffic Alert Limitations....373
Cross Traffic Alert Precautions....373
Cross Traffic Alert – Troubleshooting....375
Cross Traffic Alert – Information Messages....375
Cross Traffic Alert – Warning Lamps....375
Cruise Control....319
Cruise Control Indicators....320
Cup Holders....185
Locating the Cup Holders....185
Customer Information....629
Radio Frequency Certification Labels....630
Customizing the Instrument Cluster Display - Vehicles With: 12 Inch Screen....134
Customizing the Instrument Cluster Display - Vehicles With: 8 Inch Screen....134

D

Data Privacy....27
Declaration of Conformity....629
Diesel Particulate Filter....217
Diesel Particulate Filter Manual Regeneration....218
Diesel Particulate Filter – Troubleshooting....220
Diesel Particulate Filter Manual Regeneration....218
Diesel Particulate Filter Manual Regeneration Limitations....219

Diesel Particulate Filter Manual Regeneration Precautions....218
Diesel Particulate Filter Manual Regeneration Requirements....218
Starting Diesel Particulate Filter Manual Regeneration....219
What Is Diesel Particulate Filter Manual Regeneration....218
Diesel Particulate Filter Precautions....217
Diesel Particulate Filter Requirements....218
Diesel Particulate Filter – Troubleshooting....220
Diesel Particulate Filter – Information Messages....220
Diesel Particulate Filter – Warning Lamps....220
Digital Audio Broadcasting Radio....597
Digital Audio Broadcasting Radio Limitations....597
Digital Audio Broadcasting Radio Settings....598
Selecting a Digital Audio Broadcasting Radio Station....597
Switching Service Linking On and Off....597
What Is Digital Audio Broadcasting Radio....597
What Is Service Linking....597
Directing the Flow of Air....142
Distance Alert....380
Adjusting the Sensitivity of Distance Alert....380
What Is Distance Alert....380
Distance Indication....379
Distance Indication Indicator....380
Switching Distance Indication On and Off....380
What Is Distance Indication....379
Door Lock Indicators....82
Doors and Locks Audible Warnings....82
Doors and Locks....80
Autorelock....81
Autounlock....81
Doors and Locks – Troubleshooting....82
Mislock....81
Operating the Doors From Inside Your Vehicle....81
Operating the Doors From Outside Your Vehicle....80
Doors and Locks – Troubleshooting....82
Doors and Locks – Frequently Asked Questions....83
Doors and Locks – Information Messages....82
Doors and Locks – Warning Lamps....82
Draining the Fuel Filter Water Trap - Diesel....491
Drive Belt Routing Overview - 2.0L Diesel....492
Drive Belt Routing Overview - 2.3L EcoBoost™....493
Drive Belt Routing Overview - 3.0L Diesel....493
Drive Belt Routing Overview - 3.0L EcoBoost™....493
Drive Mode Control....335
Drive Mode Control – Troubleshooting....341
Drive Modes....339
Plug-In Hybrid Electric Vehicle Drive Modes....336
Plug-In Hybrid Electric Vehicle Drive Modes – Troubleshooting....337
Drive Mode Control – Troubleshooting....341
Drive Mode Control – Frequently Asked Questions....342
Drive Mode Control – Information Messages....341
Drive Mode Control – Warning Lamps....341
Drive Modes....339
Baja....345
Eco....339
Mud/Ruts....339
Normal....339
Rock Crawl....346
Sand....340
Slippery....340
Sport....347
Tow/Haul....340
Driver Alert....385
Driver Alert – Troubleshooting....386

Driver Alert Indicators....386
Driver Alert Limitations....385
Driver Alert Precautions....385
Driver Alert – Troubleshooting....386
Driver Alert – Information Messages....386
Driving Economically....448
Driving Hints....448
Driving in Cold Weather....448
Driving Through Water Limitations....440
Driving Your Vehicle at High Speeds - Raptor....440
Drowsiness Monitor
See: Driver Alert....385

E

Easy Entry and Exit....86
eCall....69
eCall – Troubleshooting....71
eCall – Troubleshooting....71
eCall – Information Messages....71
eCall User Information....711
Eco Coach....349
Electric Economy - Plug-In Hybrid Electric Vehicle (PHEV)....135
Electric Parking Brake Audible Warning....281
Electric Parking Brake....280
Electric Parking Brake – Troubleshooting....282
Electric Parking Brake – Troubleshooting....282
Electric Parking Brake – Frequently Asked Questions....283
Electric Parking Brake – Information Messages....283
Electric Parking Brake – Warning Lamps....282
Electric Power Steering....304
Electric Power Steering Precautions....304
How Does Electric Power Steering Work....304
Electromagnetic Compatibility....741
Electronic Locking Differential....267
Electronic Locking Differential – Troubleshooting....271
Electronic Locking Differential Indicators - Excluding: Raptor....270
Electronic Locking Differential Indicators - Raptor....270
Electronic Locking Differential – Troubleshooting....271
Electronic Locking Differential – Information Messages....271
Emergency Call Indicators....70
Emergency Call Limitations....69
Emergency Call Requirements....69
Emergency Call System Data - Vehicles With: eCall....30
Emergency Equipment....460
Emergency Towing - Automatic Transmission....459
Emergency Towing - Manual Transmission....459
Enabling Apps on a Mobile Device....609
Enabling Local Hazard Information....350
Enabling Remote Start....138
End User License Agreement....715
Engine Air Filter....489
Changing the Engine Air Filter....489
Engine Coolant Temperature Gauge....123
Engine Oil Capacity and Specification - 2.0L Diesel....565
Engine Oil Capacity and Specification - 2.3L EcoBoost™, Plug-In Hybrid Electric Vehicle (PHEV)....566
Engine Oil Capacity and Specification - 3.0L Diesel....567
Engine Oil Capacity and Specification - 3.0L EcoBoost™....566
Engine Oil....483
Adding Engine Oil....484
Checking the Engine Oil Level....483
Engine Oil Dipstick Overview....483
Engine Oil – Information Messages....485
Intelligent Oil Life Monitor....484
Resetting the Intelligent Oil Life Monitor....484
Engine Oil Pressure Gauge - Vehicles With: 12 Inch Screen....123
Engine Oil Pressure Gauge - Vehicles With: 8 Inch Screen....123

Engine Specifications - 2.0L Diesel....555
Engine Specifications - 2.3L EcoBoost™, Plug-In Hybrid Electric Vehicle (PHEV)....556
Engine Specifications - 3.0L Diesel....558
Engine Specifications - 3.0L EcoBoost™....557
Environment....31
Evasive Steering Assist....381
Evasive Steering Assist Limitations....381
Switching Evasive Steering Assist On and Off....381
What Is Evasive Steering Assist....381
EV Coach - Plug-In Hybrid Electric Vehicle (PHEV)....134
Event Data....28
Extending the Remote Start Duration....139
Exterior Bulbs....499
Changing a Front Fog Lamp Bulb....507
Changing a Front Side Marker Lamp Bulb....506
Changing a Front Turn Signal Lamp Bulb....504
Changing a Headlamp Bulb....501
Changing a Rear Lamp Bulb....507
Exterior Bulb Specification Chart....499
Removing a Rear Lamp Assembly....501
Exterior Lamps....101
Exterior Lamp Indicators....103
Exterior Lamps On Audible Warning....103
Switching the Cargo Lamps On....102
Switching the Daytime Running Lamps On and Off....101
Switching Welcome Lighting On and Off....103
Using the Front Fog Lamps....102
Using the Rear Fog Lamps....102
Using the Turn Signal Lamps....101
Exterior Lighting Control....99
Exterior Lighting....99
Adaptive Front Lighting....109
Autolamps....101
Automatic High Beam Control....104
Automatic High Beam Control – Troubleshooting....106
Exterior Lamps....101
Exterior Zone Lighting....103
Glare Free Lighting....106
Glare Free Lighting – Troubleshooting....108
Headlamps....99
Headlamps – Troubleshooting....100
Exterior Mirrors....117
Exterior Zone Lighting....103
Using the Exterior Zone Lighting....103
What Is Exterior Zone Lighting....103

F

Fail-Safe Cooling....457
Driving When Fail-Safe Mode Is Activated....457
Fail-Safe Cooling Indicators....458
How Does Fail-Safe Cooling Work....457
What Is Fail-Safe Cooling....457
Fastening and Unfastening the Seatbelts....60
Filling the Selective Catalytic Reduction System Tank....223
Filling the Selective Catalytic Reduction System Tank in Cold Weather....223
Filling the Selective Catalytic Reduction System Tank Using a Fuel Station Pump....223
Filling the Selective Catalytic Reduction System Tank Using a Portable Container....225
Flat Tire
See: Changing a Flat Tire - Excluding: Raptor....534
See: Changing a Flat Tire - Raptor....544
Floor Mats....449
FM Radio....596
FM Radio Limitations....596
Selecting an FM Radio Station....596
Folding the Exterior Mirrors - Vehicles With: Manual Folding Mirrors....117
Folding the Exterior Mirrors - Vehicles With: Power Folding Mirrors....117
Ford Assistant....602
Ford Assistant – Frequently Asked Questions....602
Ford Assistant Settings....602

Ranger (TRA, TRB) Vehicles Built From: 01-11-2024, CG4010en enGBR, Edition date: 202407, DOM

Using Ford Assistant....602
Ford Performance....19
Four-Wheel Drive....258
Four-Wheel Drive Modes....263
Four-Wheel Drive – Troubleshooting....264
Four-Wheel Drive Indicators....264
Four-Wheel Drive Limitations - Excluding: Raptor....258
Four-Wheel Drive Limitations - Raptor....260
Four-Wheel Drive Modes....263
Four-Wheel Drive Auto....263
Four-Wheel Drive High....263
Four-Wheel Drive Low....264
Two-Wheel Drive High....263
Four-Wheel Drive – Troubleshooting....264
Four-Wheel Drive – Information Messages....265
Four-Wheel Drive – Warning Lamps....264
Front Axle Fluid Capacity and Specification - Excluding: Raptor....583
Front Axle Fluid Capacity and Specification - Raptor....584
Front Exterior - Excluding: Raptor....42
Front Exterior - Raptor....43
Front Parking Aid....308
Front Parking Aid Audible Warnings....309
Front Parking Aid Limitations....309
Locating the Front Parking Aid Sensors....309
What is the Front Parking Aid....308
Front Passenger Sensing System....65
Front Passenger Sensing System Indicators....68
Front Passenger Sensing System Precautions....68
How Does the Front Passenger Sensing System Work....65
What Is the Front Passenger Sensing System....65
Front Seat Precautions....155
Front Seats....155
Heated Seats....160
Manual Seats....156
Power Seats....158
Ventilated Seats....161
Fuel and Refueling....205
Fuel and Refueling – Troubleshooting....216
Fuel Quality....205
Refueling....208
Running Out of Fuel....207
Fuel and Refueling Precautions....205
Fuel and Refueling – Troubleshooting....216
Fuel and Refueling – Information Messages....216
Fuel and Refueling – Warning Lamps....216
Fuel Consumption Figures - 2.0L Diesel....213
Fuel Consumption Figures - 2.3L, Plug-In Hybrid Electric Vehicle (PHEV)....214
Fuel Consumption Figures - 3.0L Diesel....216
Fuel Consumption Figures - 3.0L EcoBoost™....215
Fuel Consumption Regulations....213
Fuel Economy Display - Plug-In Hybrid Electric Vehicle (PHEV)....134
Fuel Gauge....122
Fuel Gauge Limitations....122
Locating the Fuel Filler Door....122
What Is Distance to Empty....122
What Is the Fuel Gauge....122
What Is the Low Fuel Reminder....122
Fuel Quality....205
Selecting the Correct Fuel....205
Fuel Tank Capacity - 2.0L Diesel....571
Fuel Tank Capacity - 3.0L Diesel....574
Fuel Tank Capacity....213
Fuel Tank Capacity - Plug-In Hybrid Electric Vehicle (PHEV)....572
Fuse Precautions....461
Fuses....461
Battery Fuse Box....471
Body Control Module Fuse Box....472
Fuses – Troubleshooting....475
Under Hood Fuse Box....461
Fuses – Troubleshooting....475
Fuses – Frequently Asked Questions....475

G

Gasoline Particulate Filter.....229
Gasoline Particulate Filter – Troubleshooting.....230
Gasoline Particulate Filter Precautions.....229
Gasoline Particulate Filter Requirements.....229
Gasoline Particulate Filter – Troubleshooting.....230
Gasoline Particulate Filter – Information Messages.....230
Gasoline Particulate Filter – Warning Lamps.....230
Geofencing.....614
Geofencing Indicators.....614
Geofencing Limitations.....614
Geofencing Precautions.....614
Glare Free Lighting.....106
Glare Free Lighting Indicators.....108
Glare Free Lighting Limitations.....108
Glare Free Lighting Precautions.....107
Glare Free Lighting Requirements.....107
How Does Glare Free Lighting Work.....106
Overriding Glare Free Lighting.....108
Switching Glare Free Lighting On and Off.....108
Glare Free Lighting – Troubleshooting.....108
Glare Free Lighting – Information Messages.....108
Glasses Holder.....186
Locating the Glasses Holder.....186
Global Opening and Closing.....113
Switching Global Closing On and Off.....114
Switching Global Opening On and Off.....114
Using Global Closing.....114
Using Global Opening.....114
What Is Global Opening and Closing.....113
Glossary of Tire Terminology.....520
Glove Compartment.....185
Opening the Glove Compartment.....185

H

Headlamp Adjusting
See: Adjusting the Headlamps.....497
Headlamps.....99
Adjusting the Level of the Headlamps.....99
Headlamp Indicators.....100
Switching Headlamp Exit Delay On and Off.....99
Using the High Beam Headlamps.....99
Headlamps – Troubleshooting.....100
Headlamps – Frequently Asked Questions.....100
Heated Seats.....160
Heated Seat Precautions.....160
Switching the Heated Seats On and Off.....161
Heating
See: Climate Control - Vehicles With: Automatic Temperature Control.....140
See: Climate Control - Vehicles With: Manual Temperature Control.....145
High Voltage Battery Gauge - Plug-In Hybrid Electric Vehicle (PHEV).....123
High Voltage Battery.....231
High Voltage Battery – Troubleshooting.....231
High Voltage Battery Precautions.....231
High Voltage Battery Temperature Gauge - Plug-In Hybrid Electric Vehicle (PHEV).....123
High Voltage Battery – Troubleshooting.....231
High Voltage Battery – Warning Lamps.....231
High Voltage Battery Vehicle Precautions - Plug-In Hybrid Electric Vehicle (PHEV).....450
Hill Descent Control.....302
Hill Descent Control – Troubleshooting.....303
Hill Descent Control Indicator.....303
Hill Descent Control Precautions.....302
Hill Descent Control – Troubleshooting.....303
Hill Descent Control – Information Messages.....303
Hill Start Assist.....288
Hill Start Assist – Troubleshooting.....288
Hill Start Assist Precautions.....288

Ranger (TRA, TRB) Vehicles Built From: 01-11-2024, CG4010en enGBR, Edition date: 202407, DOM

Hill Start Assist – Troubleshooting....288
Hill Start Assist – Information Messages....288
Hood Lock
See: Opening and Closing the Hood....477
Horn....93
How Does Adaptive Cruise Control With Stop and Go Work....321
How Does Adaptive Cruise Control Work....321
How Does Auto Hold Work....289
How Does Blind Spot Information System Work....367
How Does Cross Traffic Alert Work....373
How Does Drive Mode Control Work....338
How Does Driver Alert Work....385
How Does Easy Entry and Exit Work....86
How Does eCall Work....69
How Does Eco Coach Work....349
How Does Four-Wheel Drive Work - 4x4 with Part Time Engagement....258
How Does Four-Wheel Drive Work - Advanced 4x4 with 4A Mode....258
How Does Geofencing Work....614
How Does Hill Descent Control Work....302
How Does Hill Start Assist Work....288
How Does Instantaneous Efficiency Level Work....349
How Does Pre-Collision Assist Work....376
How Does Reverse Brake Assist Work....284
How Does Stability Control Work....293
How Does the 360 Degree Camera Work....315
How Does the Diesel Particulate Filter Work....217
How Does the Gasoline Particulate Filter Work....229
How Does the Intelligent Speed Limiter Work....353
How Does the Lane Keeping System Work....356
How Does the Rear Occupant Alert System Work....165
How Does the Selective Catalytic Reduction System Work....222
How Does the Speed Limiter Work....351
How Does Traction Control Work....291
How Does Traffic Sign Recognition Work....387
How Does Trailer Backup Assistance Work....419
How Does Trailer Reverse Guidance Work....430
How Does Trailer Sway Control Work....418
How Does Trip Summary Work....349
How Does Wrong Way Alert Work....390
How Do the Front Airbags Work....63
How Do the Knee Airbags Work....64
How Do the Side Airbags Work....63
How Do the Side Curtain Airbags Work....64

I

Icon Glossary
See: Symbols Glossary....23
Icons
See: Symbols Glossary....23
Identifying Fuse Types....475
Identifying the Auxiliary Switch Wiring....620
Identifying the Climate Control Unit....140
Ignition Switch....187
Inflating the Tires....524
Information on the Tire Sidewall....517
Inspecting the Tire for Damage....528
Inspecting the Tire for Wear....527
Inspecting the Wheel Valve Stems....529
Installing Child Restraints....51
Using Seatbelts....51
Using Tether Straps....55
Instrument Cluster Display....125
Instrument Cluster Display Main Menu - Plug-In Hybrid Electric Vehicle (PHEV)....126

Instrument Cluster Display Main Menu - Raptor....132
Instrument Cluster Display Main Menu - Vehicles With: 12 Inch Screen, Excluding: Raptor....130
Instrument Cluster Display Main Menu - Vehicles With: 8 Inch Screen....128
Instrument Cluster....119
Fuel Gauge....122
Instrument Cluster Overview - Plug-In Hybrid Electric Vehicle (PHEV)....119
Instrument Cluster Overview - Vehicles With: 12 Inch Screen....120
Instrument Cluster Overview - Vehicles With: 8 Inch Screen....119
Instrument Panel - LHD, Excluding: Raptor....34
Instrument Panel - Raptor, LHD....36
Instrument Panel - Raptor, RHD....37
Instrument Panel - RHD, Excluding: Raptor....35
Intelligent Adaptive Cruise Control....332
How Does Intelligent Adaptive Cruise Control Work....332
Intelligent Adaptive Cruise Control Alerts....332
Intelligent Adaptive Cruise Control Indicators....333
Intelligent Adaptive Cruise Control Limitations....332
Intelligent Adaptive Cruise Control Precautions....332
Intelligent Adaptive Cruise Control Requirements....332
Switching Intelligent Mode On and Off....332
Intelligent Adaptive Cruise Control – Troubleshooting....333
Intelligent Adaptive Cruise Control – Information Messages....333
Intelligent Speed Limiter Audible Warnings....354
Intelligent Speed Limiter Indicators....354
Intelligent Speed Limiter....353
Intelligent Speed Limiter – Troubleshooting....355
Intelligent Speed Limiter Precautions....353
Intelligent Speed Limiter – Troubleshooting....355
Intelligent Speed Limiter – Frequently Asked Questions....355
Intentionally Exceeding the Set Speed Limit....352
Interior Air Quality....154
Interior Bulbs....508
Interior Bulb Specification Chart....508
Interior Lamp Function....111
Switching the Interior Lamp Function On and Off....111
What Is the Interior Lamp Function....111
Interior Lighting....111
Ambient Lighting....112
Interior Lamp Function....111
Interior Lighting – Troubleshooting....112
Interior Lighting – Troubleshooting....112
Interior Lighting – Frequently Asked Questions....112
Interior Mirror....116
Auto-Dimming Interior Mirror....116
Interior Mirror Precautions....116
Introduction....20

J

Jump Starting the Vehicle....451
Jump Starting Precautions....451
Jump Starting the Vehicle....452
Preparing the Vehicle....452

K

Keyless Entry....84
Keyless Entry – Troubleshooting....85
Keyless Entry Limitations....84
Keyless Entry Settings....84
Keyless Entry – Troubleshooting....85
Keyless Entry – Frequently Asked Questions....85
Keys and Remote Controls....72
Keys and Remote Controls – Troubleshooting....79

Keys and Remote Controls – Troubleshooting....79
Keys and Remote Controls – Information Messages....79

L

Lane Centering....328
How Does Lane Centering Work....328
Lane Centering Alerts....330
Lane Centering Automatic Cancellation....330
Lane Centering Indicators....331
Lane Centering Limitations....329
Lane Centering Manual Cancellation....331
Lane Centering Precautions....328
Lane Centering Requirements....329
Switching Lane Centering On and Off....330
Lane Centering – Troubleshooting....331
Lane Centering – Information Messages....331
Lane Keeping System Indicators....358
Lane Keeping System....356
Aid Mode....358
Alert and Aid Mode....358
Blind Spot Assist....359
Blind Spot Assist with Trailer Coverage....361
Lane Keeping System – Troubleshooting....364
Lane Keeping System Limitations....356
Lane Keeping System Precautions....356
Lane Keeping System Settings....357
Lane Keeping System – Troubleshooting....364
Lane Keeping System – Frequently Asked Questions....365
Lane Keeping System – Information Messages....364
Launching or Retrieving a Boat or Personal Watercraft....412
Live Traffic....611
Switching Live Traffic On and Off....611
What Is Live Traffic....611
Load Carrying....392
Roof Rack....395
Load Carrying Precautions....392
Load Retaining Fixtures and Capacities....393
Local Hazard Information Indicators....350
Local Hazard Information....350
Local Hazard Information Precautions....350
Locating the 360 Degree Cameras....315
Locating the Auxiliary Switches....619
Locating the Auxiliary Switch Wiring....619
Locating the Blind Spot Information System Sensors....368
Locating the Brake Fluid Reservoir....274
Locating the Charge Port....236
Locating the Cross Traffic Alert Sensors....374
Locating the Fuel Filler Funnel....206
Locating the Memory Function Buttons....168
Locating the Outlets....176
Locating the Power Outlets....171
Locating the Pre-Collision Assist Sensors....379
Locating the Rear View Camera....312
Locating the Tire label....517
Locating the USB Ports....169
Locating the Wireless Accessory Charger....183
Locating Your Vehicle....73
Locking and Unlocking the Tailgate....87
Locking the Rear Window Controls....115
Locking the Steering Wheel - Vehicles With: Push Button Start....93
Locking the Steering Wheel - Vehicles Without: Push Button Start....93
Low Engine Use Mode....200

M

Maintenance....477
12V Battery....494
12V Battery – Troubleshooting....496
Engine Air Filter....489
Engine Oil....483
Exterior Bulbs....499
Interior Bulbs....508

Ranger (TRA, TRB) Vehicles Built From: 01-11-2024, CG4010en enGBR, Edition date: 202407, DOM

Maintenance Precautions.....477
Making and Receiving a Phone Call.....607
Manually Dimming the Interior Mirror.....116
Manually Making an Emergency Call.....69
Manually Releasing the Electric Parking Brake.....281
Manually Shifting Gears - Excluding: Raptor.....253
Manually Shifting Gears - Raptor.....254
Manual Seats.....156
Adjusting the Head Restraint.....156
Adjusting the Lumbar Support.....158
Adjusting the Seat Backrest.....157
Adjusting the Seat Height.....158
Folding the Seat Backrest.....163
Folding the Seats.....164
Head Restraint Components.....156
Installing the Head Restraint.....157
Moving the Seat Backward and Forward.....157
Removing the Head Restraint.....157
Unfolding the Seat Armrest.....164
Unfolding the Seat Backrest.....163
Unfolding the Seats.....164
Manual Transmission Fluid Capacity and Specification.....250
Manual Transmission.....249
Manual Transmission Precautions.....249
Manual Transmission Shift Indicators.....249
Media Control Buttons.....595
Memory Function.....168
Memory Function Precautions.....168
Mislock.....81
Mislock Limitations.....81
Switching Mislock On and Off.....81
What Is Mislock.....81
Mobile Communications Equipment.....711
Mobile Device Data.....29

N

Navigation Map Updates.....611
Navigation.....611
Adjusting the Map.....611
Live Traffic.....611
Route Guidance.....612
Setting a Destination.....611
Waypoints.....612

O

Off-Road Driving Aids - Raptor.....442
Off-Road Driving.....439
Off-Road Screen.....444
Off-Road Screen.....444
How Does The Off-Road Screen Work.....444
Switching The Off-Road Screen On and Off.....444
Using the Off-Road Screen.....444
What Is The Off-Road Screen.....444
Onboard Generator Indicators.....177
Onboard Generator.....175
Onboard Generator – Troubleshooting.....180
Onboard Generator Precautions.....175
Onboard Generator – Troubleshooting.....180
Onboard Generator – Frequently Asked Questions.....181
Onboard Generator – Information Messages.....180
Opening and Closing the Flip Key - Vehicles With: Remote Flip Key.....72
Opening and Closing the Hood.....477
Opening and Closing the Windows.....113
Opening the Tailgate.....87
Opening the Tailgate From Outside Your Vehicle.....87
Operating the Doors From Inside Your Vehicle.....81
Opening the Doors From Inside Your Vehicle.....81
Unlocking and Locking the Doors Using the Central Locking.....81
Operating the Doors From Outside Your Vehicle.....80
Double Locking the Doors Using the Key Blade.....80

Double Locking the Doors Using the Remote Control....80
Unlocking and Locking the Doors Using the Key Blade....80
Unlocking and Locking the Doors Using the Remote Control....80
OTA
See: Software Update Settings....616
See: Vehicle Software Updates....616
Overriding Reverse Brake Assist....285
Overriding the Set Speed....327
Over the air
See: Software Update Settings....616
Over-the-air
See: Software Update Settings....616
See: Vehicle Software Updates....616
See: Vehicle Software Updates....616

P

Parking Aid Indicators....310
Parking Aid Precautions....307
Parking Aids....307
Front Parking Aid....308
Parking Aids – Troubleshooting....311
Rear Parking Aid....308
Parking Aids – Troubleshooting....311
Parking Aids – Information Messages....311
Parking Brake Audible Warning....278
Parking Brake....278
Parking Brake – Troubleshooting....278
Parking Brake – Troubleshooting....278
Parking Brake – Information Messages....279
Parking Brake – Warning Lamps....278
Parking Heater Limitations....150
Parking Heater....150
Parking Heater Settings....150
Parking Heater – Troubleshooting....153
Parking Heater Precautions....150
Parking Heater Remote Control Indicators....152
Parking Heater Settings....150
Setting the Parking Heater Timer....150
Switching Continue Heat On....150
Parking Heater – Troubleshooting....153
Parking Heater – Information Messages....153
Passive Anti-Theft System....89
How Does the Passive Anti-Theft System Work....89
What Is the Passive Anti-Theft System....89
Performing a System Reset....618
Phone Menu....606
Phone....606
Phone Precautions....606
Pickup Bed Access Caps....403
Locating the Pickup Bed Access Caps....403
What are Pickup Bed Access Caps....403
Pickup Bed Anchor Points....401
Locating the Pickup Bed Anchor Points....401
Pickup Bed Anchor Point Load Capacities....402
Pickup Bed Anchor Point Precautions....401
Pickup Bed....401
Pickup Bed Access Caps....403
Pickup Bed Anchor Points....401
Pickup Bed Slots....403
Roller Shutter....403
Pickup Bed Precautions....401
Pickup Bed Slots....403
Locating the Pickup Bed Slots....403
Playing Media Using Bluetooth®....610
Playing Media Using the USB Port....169
Plug-In Hybrid Electric Vehicle Drive Modes....336
Auto EV....336
EV Charge....336
EV Later....336
EV Now....336
Plug-In Hybrid Electric Vehicle Drive Modes – Troubleshooting....337
Plug-In Hybrid Electric Vehicle Drive Modes – Information Messages....337
Plug-In Hybrid Electric Vehicle Information....198
Post-Crash Alert System....453
How Does the Post-Crash Alert System Work....453
Post-Crash Alert System Limitations....453
Switching the Post-Crash Alert System Off....453

Ranger (TRA, TRB) Vehicles Built From: 01-11-2024, CG4010en enGBR, Edition date: 202407, DOM

What Is the Post-Crash Alert System....453
Post Impact Braking....453
How Does Post Impact Braking Work....453
Overriding Post Impact Braking....454
Post Impact Braking Indicators....454
Post Impact Braking Limitations....454
Power Outlet Indicators....172
Power Outlet Limitations....171
Power Outlet....171
Power Outlet Precautions....171
Power Seats....158
Adjusting the Head Restraint....158
Adjusting the Lumbar Support....160
Adjusting the Seat Backrest....159
Adjusting the Seat Cushion....159
Adjusting the Seat Height....160
Head Restraint Components....158
Installing the Head Restraint....159
Moving the Seat Backward and Forward....159
Removing the Head Restraint....159
Power-Up
See: Software Update Settings....616
See: Vehicle Software Updates....616
Pre-Collision Assist Limitations....377
Pre-Collision Assist Precautions....376
Pre-Collision Assist....376
Automatic Emergency Braking....380
Distance Alert....380
Distance Indication....379
Evasive Steering Assist....381
Pre-Collision Assist – Troubleshooting....381
Pre-Collision Assist – Troubleshooting....381
Pre-Collision Assist – Frequently Asked Questions....383
Pre-Collision Assist – Information Messages....382
Pre-Collision Assist – Warning Lamps....381
Preparing Your Vehicle for Storage....515
Programming the Remote Control - Vehicles With: Flip Key....77
Programming the Remote Control - Vehicles With: Push Button Start....77
Protecting the Environment....31
Puncture
See: Changing a Flat Tire - Excluding: Raptor....534
See: Changing a Flat Tire - Raptor....544
Push Button Ignition Switch....188

R

Radio Frequency Certification Labels....630
Audio Unit....630
Blind Spot Information System Sensors....634
Body Control Module....642
Cruise Control Module....646
Integrated Keyhead Transmitter....651
Passive Anti-Theft System....658
Passive Key....662
Radio Transceiver Module....676
SYNC....684
Telematics Control Unit....690
Tire Pressure Monitoring System Sensors....693
Wireless Accessory Charging Module....702
REACH....629
Rear Axle Fluid Capacity and Specification - Excluding: Raptor....584
Rear Axle Fluid Capacity and Specification - Raptor....585
Rear Exterior - Excluding: Raptor....44
Rear Exterior - Raptor....45
Rear Occupant Alert System Audible Warnings....167
Rear Occupant Alert System Indicators....166
Rear Occupant Alert System Limitations....165
Rear Occupant Alert System Precautions....165
Rear Occupant Alert System....165
Rear Occupant Alert System Settings....166
Rear Parking Aid....308
Locating the Rear Parking Aid Sensors....308

Rear Parking Aid Audible Warnings.....308
Rear Parking Aid Limitations.....308
What is the Rear Parking Aid.....308
Rear Seats.....162
Manual Seats.....162
Rear View Camera Guide Lines.....313
Rear View Camera Precautions.....312
Rear View Camera.....312
Rear View Camera Settings.....313
Rear View Camera Settings.....313
Switching Rear View Camera Delay On and Off.....314
Switching the Rear View Camera View.....314
Zooming the Rear View Camera In and Out.....313
Rebooting the Center Display.....601
Recalling a Preset Position.....168
Recovery Towing.....454
Accessing the Front Towing Point.....454
Accessing the Rear Towing Point.....455
Recycling and Disposing of the High Voltage Battery.....231
Refueling.....208
Manually Opening the Fuel Filler Door.....212
Refueling System Overview.....208
Refueling Your Vehicle.....208
Releasing the Electric Parking Brake if the Vehicle Battery Has Run Out of Charge.....281
Releasing the Parking Brake.....278
Remote Control Limitations.....72
Remotely Starting and Stopping the Vehicle.....138
Remote Start Limitations.....138
Remote Start Precautions.....138
Remote Start.....138
Remote Start Settings.....139
Removing the Key Blade - Vehicles With: Push Button Start.....73
Removing Your Vehicle From Storage.....516
Repairing Minor Paint Damage.....513
Replacement Parts Recommendation.....710
Replacing a Lost Key or Remote Control.....76
Replacing the Cabin Air Filter.....154
Replacing the Front Wiper Blades.....96
Resetting Ground Fault Detection.....179
Resetting the Circuit Breaker - Vehicles With: 220-240V 6.9kW Power Outlet.....179
Resetting the Individual Trip Values - Vehicles With: 8 Inch Screen.....137
Resetting the Trip Computer.....137
Resetting Tire Pressure Monitoring System.....531
Restarting the Engine - Automatic Transmission.....202
Restarting the Engine - Manual Transmission.....202
Resuming the Set Speed Limit.....351
Resuming the Set Speed.....320
Reverse Brake Assist Indicators.....285
Reverse Brake Assist Precautions.....284
Reverse Brake Assist.....284
Reverse Brake Assist – Troubleshooting.....286
Reverse Brake Assist – Troubleshooting.....286
Reverse Brake Assist – Frequently Asked Questions.....287
Reverse Brake Assist – Information Messages.....286
Roller Shutter.....403
Opening and Closing the Roller Shutter.....404
Overriding Roller Shutter Bounce-Back.....405
Resetting Roller Shutter Bounce-Back.....406
Roller Shutter Limitations.....404
Roller Shutter Precautions.....403
Stopping the Roller Shutter.....405
What Is Roller Shutter Bounce-Back.....405
Rollover Warning.....629
Roof Rack.....395
Adjusting a Roof Rack Crossbar.....397
Removing and Installing the Roof Rack.....395
Roof Rack Load Capacities.....400
Roof Rack Precautions.....395

Route Guidance....612
Adjusting the Guidance Prompt Volume....612
Canceling Route Guidance....612
Repeating an Instruction....612
Running-In
See: Breaking-In....448
Running Out of Fuel....207
Adding Fuel From a Portable Fuel Container....207
Filling a Portable Fuel Container....207

S

Saving a Preset Position....168
Seatbelt Precautions....60
Seatbelt Reminder....61
Checking Seatbelt Status....61
Seatbelt Reminder Audible Warnings....61
Seatbelt Reminder Indicators....61
Switching the Seatbelt Reminder On and Off....61
Seatbelts....60
Seatbelt Reminder....61
Security....89
Anti-Theft Alarm System....89
Anti-Theft Alarm System Settings....90
Passive Anti-Theft System....89
Security – Troubleshooting....91
Security – Troubleshooting....91
Security – Frequently Asked Questions....92
Security – Information Messages....91
Selecting a Drive Mode....335
Selecting a Drive Mode - Vehicles With: Push Button Selectable Drive Modes....338
Selecting a Drive Mode - Vehicles With: Rotary Selectable Drive Modes....339
Selecting a Four-Wheel Drive Mode - 4x4 with Part Time Engagement....261
Selecting a Four-Wheel Drive Mode - Advanced 4x4 with 4A Mode....262
Selecting the Audio Source....595
Selective Catalytic Reduction Fluid Consumption....226
Selective Catalytic Reduction System Guidelines....222
Selective Catalytic Reduction System Precautions....222
Selective Catalytic Reduction System Requirements....222
Selective Catalytic Reduction System....222
Filling the Selective Catalytic Reduction System Tank....223
Selective Catalytic Reduction System – Troubleshooting....226
Selective Catalytic Reduction System – Troubleshooting....226
Selective Catalytic Reduction System – Information Messages....227
Selective Catalytic Reduction System – Warning Lamps....226
Sending and Receiving a Text Message....608
Service Data....28
Service Intervals....628
Setting a Destination....611
Setting a Destination Using a Point of Interest....612
Setting a Destination Using a Recent Destination....611
Setting a Destination Using a Saved Destination....612
Setting a Destination Using the Map Screen....611
Setting a Destination Using the Text Entry Screen....611
Setting a Memory Preset....596
Settings Data....29
Settings....600
Setting the Adaptive Cruise Control Gap....325
Setting the Adaptive Cruise Control Speed....324
Setting the Blower Motor Speed....141
Setting the Clock and Date....596
Setting the Cruise Control Speed....319
Setting the Hill Descent Speed....302
Setting the Speed Limit....351
Setting the Temperature....141
Setting the Temperature - Vehicles With: Heater....147
Setting the Temperature - Vehicles Without: Heater....146

Ranger (TRA, TRB) Vehicles Built From: 01-11-2024, CG4010en enGBR, Edition date: 202407, DOM

Setting the Trail Control Speed.....297
Setting Up the Trailer Backup Assistance for a Conventional Trailer.....419
Applying the Trailer Reversing Aid Sticker.....421
Calibrating the System.....421
Configuring the Trailer.....419
Setting Up Trailer Reverse Guidance for a Conventional Trailer.....430
Applying the Trailer Reverse Aid Sticker.....431
Calibrating the System.....432
Configuring the Trailer.....430
Shifting Into Reverse.....249
Shifting Your Immobile Vehicle Out of Park (P).....256
Signing In to Your Account.....604
Sitting in the Correct Position.....155
Software Update Indicators.....617
Software Update Settings.....616
Software Update
See: Software Update Settings.....616
See: Vehicle Software Updates.....616
Sounding the Panic Alarm.....73
Special Notices - Turkey.....21
Speed Control
See: Cruise Control.....319
Speed Limiter Audible Warnings.....352
Speed Limiter Indicators.....352
Speed Limiter Precautions.....351
Speed Limiter.....351
Speedometer.....121
Stability Control Indicator.....295
Stability Control.....293
Stability Control – Troubleshooting.....296
Stability Control – Troubleshooting.....296
Stability Control – Information Messages.....296
Starter Switch
See: Ignition Switch.....187
Starting and Stopping the Engine – Precautions.....187
Starting and Stopping the Engine.....187
Automatic Engine Stop.....192
Starting and Stopping the Engine – Troubleshooting.....193
Starting the Engine.....188
Stopping the Engine.....190
Starting and Stopping the Engine – Troubleshooting.....193
Starting and Stopping the Engine – Frequently Asked Questions.....195
Starting and Stopping the Engine – Information Messages.....194
Starting and Stopping the Engine – Warning Lamps.....193
Starting the Engine.....188
Restarting the Engine After Stopping It.....190
Starting a Diesel Engine.....188
Starting a Gasoline Engine.....188
Starting a Hybrid Electric Vehicle System.....189
Status Bar.....599
Steering.....304
Electric Power Steering.....304
Steering – Troubleshooting.....304
Steering – Troubleshooting.....304
Steering – Frequently Asked Questions.....306
Steering – Information Messages.....305
Steering – Warning Lamps.....304
Steering Wheel - Excluding: Raptor.....32
Steering Wheel - Raptor.....33
Steering Wheel.....93
Stopping the Engine - Automatic Transmission.....202
Stopping the Engine - Manual Transmission.....201
Stopping the Engine.....190
Stopping the Engine When Your Vehicle is Moving.....191
Stopping the Engine When Your Vehicle is Stationary.....190
Storage.....185
Center Console.....186
Cup Holders.....185
Glasses Holder.....186
Glove Compartment.....185
Under Seat Storage.....186
Storing a Fire Extinguisher.....460
Storing a First Aid Kit.....460
Storing a Warning Triangle.....460
Storing Your Vehicle.....515
SVT.....19

Ranger (TRA, TRB) Vehicles Built From: 01-11-2024, CG4010en enGBR, Edition date: 202407, DOM

Switching Adaptive Cruise Control On and Off....324
Switching Air Conditioning On and Off....140
Switching All of the Interior Lamps On and Off....111
Switching Android Auto™ On and Off....609
Switching Apple CarPlay On and Off....609
Switching Auto Hold On and Off....289
Switching Auto-Start-Stop On and Off....201
Switching Blind Spot Information System On and Off....368
Switching Climate Control On and Off....140
Switching Cross Traffic Alert On and Off....374
Switching Cruise Control On and Off....319
Switching Driver Alert On and Off....386
Switching Easy Entry and Exit On and Off....86
Switching Four-Wheel Drive On and Off....261
Switching From Adaptive Cruise Control to Cruise Control....328
Switching From Intelligent Speed Limiter to Speed Limiter....354
Switching Generator Mode On and Off....178
Switching Hill Descent Control On and Off....302
Switching Hill Start Assist On and Off - Automatic Transmission....288
Switching Hill Start Assist On and Off - Manual Transmission....288
Switching Maximum Cooling On and Off....140
Switching Maximum Defrost On and Off....140
Switching Parking Aid On and Off....307
Switching Pre-Collision Assist On and Off....378
Switching Recirculated Air On and Off....140
Switching Reverse Brake Assist On and Off....285
Switching Stability Control On and Off....294
Switching Text Message Notification On and Off....609
Switching the Audio Unit On and Off....595
Switching the Auxiliary Heater On and Off....149
Switching the Electronic Locking Differential On and Off - Excluding: Raptor....268
Switching the Electronic Locking Differential On and Off - Raptor....269
Switching the Front Interior Lamps On and Off....111
Switching the Hazard Flashers On and Off....451
Switching the Heated Mirrors On and Off....141
Switching the Heated Rear Window On and Off....141
Switching the Heated Steering Wheel On and Off - Vehicles With: Heated Steering Wheel....94
Switching the Heated Windshield On and Off....141
Switching the Intelligent Speed Limiter On and Off....353
Switching the Lane Keeping System Mode....357
Switching the Lane Keeping System On and Off....357
Switching the Outlets On and Off....177
Switching the Parking Heater On and Off With the Remote Control....151
Switching the Rear Interior Lamps On and Off....111
Switching the Speed Limiter On and Off....351
Switching Traction Control On and Off....291
Switching Trail Control On and Off....297
Switching Trailer Backup Assistance On and Off....422
Switching Trailer Reverse Guidance On and Off....433

Switching Trailer Sway Control On and Off....418
Switching Trail Turn Assist On and Off....300
Switching Utility Idle Mode On and Off - Vehicles With: Flip Key....178
Switching Wrong Way Alert On and Off....390
Symbols Glossary....23
Symbols Used On Your Instrument Cluster....23
System Update
See: Software Update Settings....616
See: Vehicle Software Updates....616

T

Tachometer....121
Tailgate Precautions....87
Tailgate....87
Opening the Tailgate....87
Tailgate Work Surface....87
Team RS....19
Technical Specifications
See: Capacities and Specifications....555
Temporary Neutral Mode....254
Third Party Software Copyright Acknowledgment....629
Tire Care....524
Tire Pressure Monitoring System Limitations....530
Tire Pressure Monitoring System Precautions....530
Tire Pressure Monitoring System....530
Tire Pressure Monitoring System – Troubleshooting....531
Tire Pressure Monitoring System – Troubleshooting....531
Tire Pressure Monitoring System – Information Messages....533
Tire Pressure Monitoring System – Warning Lamps....531
Tire Pressure Specifications - Excluding: Raptor....524
Tire Pressure Specifications - Raptor....526
Tire Replacement Requirements....521
Tire Rotation....529
Tow Ball....407
Attaching the Tow Ball Arm....407
Tow Ball Precautions....407
Towing a Trailer Limitations....412
Towing a Trailer Precautions....411
Towing a Trailer....411
Towing a Trailer – Troubleshooting....417
Towing Weights and Dimensions....413
Towing a Trailer – Troubleshooting....417
Towing a Trailer – Information Messages....417
Towing Weights and Dimensions....413
Tow Bar Dimensions....414
Towing Weight Capacities....413
Towing Your Vehicle Precautions....459
Towing Your Vehicle....459
Traction Control Indicator....291
Traction Control....291
Traction Control – Troubleshooting....292
Traction Control – Troubleshooting....292
Traction Control – Information Messages....292
Traction Control – Warning Lamps....292
Traffic Announcements....598
Switching Traffic Announcements On and Off....598
Traffic Sign Recognition Indicators....388
Traffic Sign Recognition Limitations....387
Traffic Sign Recognition Precautions....387
Traffic Sign Recognition Settings....388
Traffic Sign Recognition....387
Traffic Sign Recognition – Troubleshooting....389
Traffic Sign Recognition – Troubleshooting....389
Traffic Sign Recognition – Frequently Asked Questions....389
Traffic Sign Recognition – Information Messages....389
Trail Control Indicators....298
Trail Control Limitations....297
Trail Control....297
Trail Control – Troubleshooting....299

Ranger (TRA, TRB) Vehicles Built From: 01-11-2024, CG4010en enGBR, Edition date: 202407, DOM

Trail Control – Troubleshooting.....299
Trail Control – Information Messages.....299
Trailer Backup Assistance Precautions.....419
Trailer Backup Assistance.....419
Setting Up the Trailer Backup Assistance for a Conventional Trailer.....419
Trailer Backup Assistance – Troubleshooting.....425
Trailer Backup Assistance – Troubleshooting.....425
Trailer Backup Assistance – Frequently Asked Questions.....427
Trailer Backup Assistance – Information Messages.....425
Trailer Brake Precautions.....412
Trailer Lighting Check.....409
Trailer Reverse Guidance Precautions.....430
Trailer Reverse Guidance.....430
Setting Up Trailer Reverse Guidance for a Conventional Trailer.....430
Trailer Reverse Guidance – Troubleshooting.....435
Trailer Reverse Guidance – Troubleshooting.....435
Trailer Reverse Guidance – Frequently Asked Questions.....437
Trailer Reverse Guidance – Information Messages.....435
Trailer Sway Control Precautions.....418
Trailer Sway Control.....418
Trailer Towing Navigation.....612
Trail Turn Assist Indicators.....300
Trail Turn Assist Limitations.....300
Trail Turn Assist Precautions.....300
Trail Turn Assist.....300
Trail Turn Assist – Troubleshooting.....301
Trail Turn Assist – Troubleshooting.....301
Trail Turn Assist – Frequently Asked Questions.....301
Trail Turn Assist – Information Messages.....301
Transfer Case Fluid Capacity and Specification.....264
Transmission Fluid Temperature Gauge - Vehicles With: 12 Inch Screen.....124
Transmission Fluid Temperature Gauge - Vehicles With: 8 Inch Screen.....123
Transporting the Vehicle.....456
Trip Computer.....137
Trip Summary - Plug-In Hybrid Electric Vehicle (PHEV).....136
Tyre Pressure Specifications
See: Tire Pressure Specifications - Excluding: Raptor.....524
See: Tire Pressure Specifications - Raptor.....526

U

Under Hood Fuse Box.....461
Accessing the Under Hood Fuse Box.....461
Identifying the Fuses in the Under Hood Fuse Box.....462
Locating the Under Hood Fuse Box.....461
Under Hood Overview - 2.0L Diesel.....479
Under Hood Overview - 2.3L, Hybrid Electric Vehicle (HEV).....480
Under Hood Overview - 3.0L Diesel.....482
Under Hood Overview - 3.0L EcoBoost™.....481
Under Seat Storage.....186
Locating the Under Seat Storage Compartment.....186
Unique Features.....46
USB Ports.....169
Using Alexa Built-In.....604
Using Auto Hold.....289
Using Keyless Entry.....84
Using Progressive Range Selection.....257
Using Snow Chains.....522
Using the Instrument Cluster Display Controls - Vehicles With: 12 Inch Screen.....125
Using the Instrument Cluster Display Controls - Vehicles With: 8 Inch Screen.....125
Using the Remote Control.....72

Ranger (TRA, TRB) Vehicles Built From: 01-11-2024, CG4010en enGBR, Edition date: 202407, DOM

Using the Trailer Backup Assistance Controller....423
Using the Trailer Backup Assistance Views....423
Using the Valet Mode....78
Using This Publication....21
Using Trailer Reverse Guidance Views....433
Using Your Vehicle App and Charging....245

V

Vehicle Care....509
Cleaning the Exterior....509
Cleaning the Interior....512
Vehicle Charging Status - Plug-In Hybrid Electric Vehicle (PHEV)....136
Vehicle Dimensions - Chassis Cab....559
Vehicle Dimensions - Double Cab....560
Vehicle Dimensions - Single Cab....562
Vehicle Dimensions - SuperCab....564
Vehicle Identification Number....586
Locating the Vehicle Identification Number....586
Vehicle Identification Plate....589
Vehicle Identification Plate Overview....589
Vehicle Identification....586
Vehicle Identification Number....586
Vehicle Identification Plate....589
Vehicle Inspection Guide....476
Vehicle Interior - LHD, Excluding: Raptor....38
Vehicle Interior - Raptor, LHD....40
Vehicle Interior - Raptor, RHD....41
Vehicle Interior - RHD, Excluding: Raptor....39
Vehicle Range Display - Plug-In Hybrid Electric Vehicle (PHEV)....122
Vehicle Software Updates....616
Vehicle System Reset....618
Vehicle Wi-Fi Hotspot – Troubleshooting....594
Vehicle Wi-Fi Hotspot – Frequently Asked Questions....594
Vehicle Wi-Fi Hotspot....593
Vehicle Wi-Fi Hotspot – Troubleshooting....594
Ventilated Seats....161
Switching the Ventilated Seats On and Off....161
Ventilated Seat Precautions....161
Ventilation
See: Climate Control - Vehicles With: Automatic Temperature Control....140
See: Climate Control - Vehicles With: Manual Temperature Control....145
Viewing the Instantaneous Efficiency Level....349
Viewing the Tire Pressures - Vehicles With: 12 Inch Screen....531
Viewing the Tire Pressures - Vehicles With: 8 Inch Screen....530
Viewing the Trip Summary....349
Visual Search....32
Voice Interaction....602
Ford Assistant....602

W

Washer Fluid Specification....579
Washers....97
Adding Washer Fluid....98
Switching the Courtesy Wipe On and Off....97
Using the Windshield Washer....97
Washer Fluid Specification....98
Washer Precautions....97
Washers
See: Wipers and Washers....95
Water Wading - Excluding: Raptor....441
Water Wading - Raptor....442
Waxing Your Vehicle....514
Waypoints....612
Adding a Waypoint....612
Editing Waypoints....612
What Are the Auxiliary Switches....619
What Is a Connected Vehicle....590
What is Alexa Built-In....604
What Is Auto-Start-Stop....201
What Is Blind Spot Information System....367
What Is Cross Traffic Alert....373

What Is Cruise Control....319
What Is Drive Mode Control....335
What Is Driver Alert....385
What Is eCall....69
What Is Eco Coach....349
What Is Generator Mode....178
What Is Geofencing....614
What Is Hill Descent Control....302
What Is Hill Start Assist....288
What Is Keyless Entry....84
What Is Local Hazard Information....350
What Is Pre-Collision Assist....376
What Is Remote Start....138
What Is Reverse Brake Assist....284
What Is the 360 Degree Camera....315
What Is the Auxiliary Heater....149
What Is the Cabin Air Filter....154
What Is the Catalytic Converter....228
What Is the Diesel Particulate Filter....217
What Is the Electric Parking Brake....280
What Is the Electronic Locking Differential - Excluding: Raptor....267
What Is the Electronic Locking Differential - Raptor....267
What Is the Gasoline Particulate Filter....229
What Is the High Voltage Battery....231
What Is the Intelligent Speed Limiter....353
What Is the Lane Keeping System....356
What Is the Memory Function....168
What Is the Onboard Generator....175
What Is the Parking Heater....150
What Is the Power Outlet....171
What is the Rear Occupant Alert System....165
What Is the Rear View Camera - Vehicles With: Analog Rear View Camera....312
What Is the Rear View Camera - Vehicles With: Digital Rear View Camera....312
What Is the Selective Catalytic Reduction System....222
What Is the Tire Pressure Monitoring System....530
What Is the Wireless Accessory Charger....183
What Is Traction Control....291
What Is Traffic Sign Recognition....387
What Is Trail Control....297
What is Trailer Backup Assistance....419
What Is Trailer Reverse Guidance....430
What Is Trail Turn Assist....300
What Is Utility Idle Mode - Vehicles With: Flip Key....178
What Is Wrong Way Alert....390
Wheel and Tire Information....517
Wheel Nuts....554
Wi Fi
See: Changing the Vehicle Wi-Fi Hotspot Name or Password....593
See: Connecting the Vehicle to a Wi-Fi Network....590
See: Creating a Vehicle Wi-Fi Hotspot....593
See: Vehicle Wi-Fi Hotspot....593
Window Bounce-Back....114
Overriding Window Bounce-Back....114
What Is Window Bounce-Back....114
Windows....113
Global Opening and Closing....113
Window Bounce-Back....114
Wipers and Washers – Troubleshooting....98
Wipers and Washers – Frequently Asked Questions....98
Wipers and Washers – Warning Lamps....98
Wipers and Washers....95
Autowipers....95
Washers....97
Wipers....95
Wipers and Washers – Troubleshooting....98
Wipers....95
Switching Windshield Wipers On and Off....95
Wiper Precautions....95
Wireless Accessory Charger Precautions....183
Wireless Accessory Charger....183
Wrong Way Alert Limitations....390
Wrong Way Alert Precautions....390
Wrong Way Alert – Troubleshooting....391
Wrong Way Alert – Information Messages....391

Wrong Way Alert.....390
Wrong Way Alert – Troubleshooting.....391

Y

Your Authorized Dealer.....622

CG4010en, Edition date: 202407