FORD **FOCUS** Owner's Manual

The information contained in this publication was correct at the time of going to print. In the interest of continuous development, we reserve the right to change specifications, design or equipment at any time without notice or obligation. No part of this publication may be reproduced, transmitted, stored in a retrieval system or translated into any language in any form by any means without our written permission. Errors and omissions excepted.

© Ford Motor Company 2013

All rights reserved.

Part Number: CG3568en 01/2013 20130130064847

Table of Contents

Introduction
About This Manual....7
Symbols Glossary....7
Replacement Parts Recommendation....9

At a Glance
At a Glance....11

Child Safety
Child Seats....18
Child Seat Positioning....19
ISOFIX Anchor Points....22
Child Safety Locks....23

Occupant protection
Principle of Operation....25
Fastening the seat belts....26
Seat belt height adjustment....27
Seat belt reminder....27
Using seat belts during pregnancy....28
Disabling the passenger airbag....28

Keys and Remote Controls
General Information on Radio Frequencies....30
Programming the remote control....30
Changing the remote control battery....30

Locks
Locking and Unlocking....33
Keyless Entry....35
Global Opening and Closing....37

Door Edge Protection
Principle of Operation....39

Engine immobiliser
Principle of Operation....40
Coded keys....40
Arming the engine immobiliser....40
Disarming the engine immobiliser....40

Alarm
Principle of Operation....41
Arming the alarm....42
Disarming the alarm....42

Steering Wheel
Adjusting the Steering Wheel....43
Audio Control....43
Voice Control....44

Wipers and Washers
Windscreen Wipers....45
Autowipers....45
Windscreen Washers....46
Rear Window Wiper and Washers....46
Headlamp Washers....47
Checking the Wiper Blades....47
Changing the Wiper Blades....47

Lighting
General Information....49
Lighting Control....49
Autolamps....50
Automatic Main Beam Control....51
Front Fog Lamps....52
Rear Fog Lamps....53
Adjusting the Headlamps - Vehicles With: Adaptive Front Lighting/Xenon Headlamps....53
Headlamp Levelling....53
Hazard Warning Flashers....54
Direction Indicators....54
Cornering Lamps....55
Interior Lamps....55
Removing a Headlamp....57
Changing a Bulb....58

Bulb Specification Chart....65

Windows and Mirrors

Power Windows....66
Exterior Mirrors....67
Electric exterior mirrors....68
Auto-Dimming Mirror....69
Blind Spot Monitor....69

Instrument Cluster

Gauges....72
Warning Lamps and Indicators....74
Audible Warnings and Indicators....77

Information Displays

General Information....79
Trip Computer....86
Personalised Settings....86
Information Messages....87

Climate Control

Principle of Operation....99
Air Vents....99
Manual Climate Control....100
Automatic Climate Control....102
Heated Windows and Mirrors....105
Electric sunroof....105
Auxiliary Heater....107

Seats

Sitting in the Correct Position....110
Manual Seats....110
Head Restraints....111
Power Seats - Vehicles With: 6-Way Power Seats....113
Power Seats - Vehicles With: 8-Way Power Seats....114
Rear Seats....115
Heated Seats....116

Convenience features

Instrument Lighting Dimmer....118
Clock....118
Cigar Lighter....118
Auxiliary Power Points....118
Cup Holders....119
Glasses Holder....119
Childminder Mirror....119
Auxiliary Input Socket....119
USB Port....119
Satellite Navigation Unit Holder....120

Storage Compartments

Bottle Holder....121

Starting and Stopping the Engine

General Information....122
Ignition Switch....122
Steering Wheel Lock....122
Starting a Petrol Engine....123
Starting a Petrol Engine - E85....123
Starting a Diesel Engine....124
Keyless Starting....124
Diesel Particulate Filter....126
Switching Off the Engine....127
Engine Block Heater....127

Start-Stop

Principle of Operation....128
Using start-stop....128

Eco Mode

Principle of Operation....130
Using Eco mode....130

Fuel and Refuelling

Safety Precautions....131
Fuel Quality - Petrol....131

Fuel Quality - E85....131
Fuel Quality - Diesel....131
Catalytic Converter....132
Fuel filler flap....132
Refuelling....134
Refuelling - E85....134
Fuel Consumption....134
Technical Specifications....135

Transmission
Manual Transmission....137
Automatic Transmission....137

Brakes
Principle of Operation....140
Hints on Driving With Anti-Lock Brakes....140
Parking Brake....140

Stability Control
Principle of Operation....141
Using Stability Control....141
Using Stability Control - 2.0L EcoBoost SCTi (MI4)....142

Hill Start Assist
Principle of Operation....143
Using hill start assist....143

Parking Aids
Principle of Operation....145
Parking Aid - Vehicles With: Rear Parking Aid....145
Parking Aid - Vehicles With: Front and Rear Parking Aid....146

Rear view camera
Principle of Operation....149
Rear View Camera....149

Active Park Assist
Principle of Operation....152
Using active park assist....152

Cruise Control
Principle of Operation....155
Using Cruise Control....155

Adaptive cruise control (ACC)
Principle of Operation....157
Using Adaptive Cruise Control....159
Forward alert function....161

Speed Limiter
Principle of Operation....162
Using the speed limiter....162

Driver Alert
Principle of Operation....163
Using driver alert....163

Lane Departure Warning
Principle of Operation....165
Using lane departure warning....165

Lane Keeping Aid
Principle of Operation....167
Using the lane keeping aid....167

Traffic Sign Recognition
Principle of Operation....169
Using traffic sign recognition....169

Active City Stop
Principle of Operation....171
Using Active City Stop....171
Using Active City Stop - 2.0L EcoBoost SCTi (MI4)....172

Table of Contents

Load Carrying
General Information....173
Luggage Anchor Points....173
Luggage Covers....173
Cargo Nets....174
Dog Guard....175
Roof Racks and Load Carriers....177

Towing
Towing a Trailer....180
Towing a Trailer - 2.0L EcoBoost SCTi (MI4)....180
Retractable tow ball....180
Tow Ball....183

Driving Hints
Running-In....186
Cold Weather Precautions....186
Driving Through Water....186
Floor Mats....186

Roadside Emergencies
First Aid Kit....188
Warning Triangle....188

Fuses
Fuse Box Locations....189
Changing a Fuse....190
Fuse Specification Chart....191

Vehicle recovery
Towing Points....199
Towing the Vehicle on Four Wheels....199

Maintenance
General Information....201
Opening and Closing the Bonnet....201
Under Bonnet Overview - 1.0L EcoBoost....203
Under Bonnet Overview - 1.6L Duratec-16V (Sigma)....204
Under Bonnet Overview - 1.6L EcoBoost SCTi (Sigma)....205
Under Bonnet Overview - 2.0L EcoBoost SCTi (MI4)....206
Under Bonnet Overview - 2.0L Duratec-HE (MI4)....207
Under Bonnet Overview - 1.6L Duratorq-TDCi (DV) Diesel....209
Under Bonnet Overview - 2.0L Duratorq-TDCi (DW) Diesel....210
Engine Oil Dipstick - 1.0L EcoBoost....211
Engine Oil Dipstick - 1.6L Duratec-16V (Sigma)....211
Engine Oil Dipstick - 1.6L EcoBoost SCTi (Sigma)....211
Engine Oil Dipstick - 2.0L EcoBoost SCTi (MI4)....211
Engine Oil Dipstick - 2.0L Duratec-HE (MI4)....212
Engine Oil Dipstick - 1.6L Duratorq-TDCi (DV) Diesel/2.0L Duratorq-TDCi (DW) Diesel....212
Engine Oil Check....212
Engine Coolant Check....213
Brake and Clutch Fluid Check....214
Washer Fluid Check....214
Technical Specifications....214

Vehicle Care
Cleaning the Exterior....218
Cleaning the Interior....219
Repairing Minor Paint Damage....219

Vehicle battery
Jump-Starting the Vehicle....220
Changing the 12V Battery....221
Battery connection points....221

Wheels and Tyres
General Information....222

Changing a Road Wheel....222
Temporary Mobility Kit....226
Tyre Care....230
Using Winter Tyres....230
Using Snow Chains....230
Using Snow Chains - 2.0L EcoBoost SCTi (MI4)....231
Tyre Pressure Monitoring System....231
Technical Specifications....232

Vehicle identification
Vehicle Identification Plate....237
Vehicle Identification Number....238

Capacities and Specifications
Technical Specifications....239

Audio introduction
Important audio information....244

Audio unit overview
Audio unit overview....245

Audio System Security
Security code....253

Audio unit operation
On/off control....254
Sound button....254
Waveband button....254
Station tuning control....254
Station preset buttons....255
Autostore control....255
Traffic information control....255

Audio unit menus
Automatic volume control....257
Digital signal processing (DSP)....257
News broadcasts....257
Alternative frequencies....257
Regional mode (REG)....258

Compact Disc Player
Compact disc playback....259
Track selection....259
Fast forward/reverse....259
Shuffle/random....259
Repeat compact disc tracks....259
Compact disc track scanning....260
MP3 file playback....260
MP3 display options....260
Ending compact disc playback....261

Auxiliary input (AUX IN) socket
Auxiliary input (AUX IN) socket....262

Audio Troubleshooting
Audio troubleshooting....263

Telephone
General Information....264
Bluetooth setup....264
Telephone setup....264
Telephone controls....265
Using the telephone....265

Voice control
Principle of Operation....268
Using voice control....268
Audio unit commands....269
Telephone commands....276
Climate control commands....281

Connectivity
General Information....284
Connecting an external device....285
Connecting an external device - Vehicles With: Bluetooth....285

Using a USB device....286
Using an iPod....287

Navigation introduction
General Information....289
Road Safety....289

Navigation unit overview
Navigation unit overview....291
Loading the navigation data....295

Navigation Quick start
Navigation Quick start....296

System settings
System settings....299

Navigation system
Route options menu....302
Route displays....303

Traffic Message Channel
Principle of Operation....304
Using TMC....304

Map updates
Map updates....305

SYNC™
General Information....306
Using Voice Recognition....307
Using SYNC™ With Your Phone....310
SYNC™ Applications and Services....320
Using SYNC™ With Your Media Player....323
SYNC™ Troubleshooting....327

Appendices
Type approvals....334
Type approvals....334
Type approvals....334
Type approvals....335
Type approvals....335
Type approvals....336
Type approvals....336
Type approvals....336
Electromagnetic compatibility....336
End User Licence Agreement....338

ABOUT THIS MANUAL

Thank you for choosing Ford. We recommend that you take some time to get to know your vehicle by reading this manual. The more that you know about it, the greater the safety and pleasure you will get from driving it.

WARNING

Always drive with due care and attention when using and operating the controls and features on your vehicle.

Note: *This manual describes product features and options available throughout the range, sometimes even before they are generally available. It may describe options not fitted to your vehicle.*

Note: *Some of the illustrations in this manual may be used for different models, so may appear different to your vehicle. However, the essential information in the illustrations is always correct.*

Note: *Always use and operate your vehicle in line with all applicable laws and regulations.*

Note: *Pass on this manual when selling your vehicle. It is an integral part of the vehicle.*

This manual may qualify the location of a component as left-hand side or right-hand side. The side is determined when facing forward in the seat.

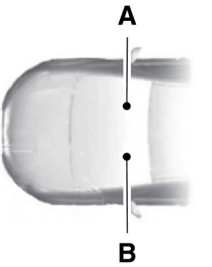

E154903

A Right-hand side
B Left-hand side

Protecting the Environment

You must play your part in protecting the environment. Correct vehicle usage and the authorised disposal of waste, cleaning and lubrication materials are significant steps toward this aim.

SYMBOLS GLOSSARY

These are some of the symbols you may see on your vehicle.

Safety alert

See Owner's Manual

Anti-lock braking system

Avoid smoking, flames or sparks

Battery

Battery acid

Brake fluid - non petroleum based

Brake system

Cabin air filter

Check fuel cap

Child safety door lock or unlock

Child seat lower anchor

Child seat tether anchor

Cruise control

Do not open when hot

Engine air filter

Engine coolant

Engine coolant temperature

Engine oil

Explosive gas

Fan warning

Fasten seat belt

Front airbag

Front fog lamps

Fuel pump reset

Fuse compartment

Hazard warning flashers

Heated rear window

Heated windscreen

Interior luggage compartment release

Jack

Lighting control

Low tyre pressure warning

Maintain correct fluid level

Panic alarm

Parking aid

Parking brake

Power steering fluid

Power windows front/rear

Power window lockout

Service engine soon

Side airbag

Stability control

Windscreen wash and wipe

Air conditioning system

REPLACEMENT PARTS RECOMMENDATION

Your vehicle has been built to the highest standards using quality parts. We recommend that you demand the use of genuine Ford and Motorcraft parts whenever your vehicle requires scheduled maintenance or repair. You can clearly identify genuine Ford and Motorcraft parts by looking for the Ford, FoMoCo or Motorcraft branding on the parts or their packaging.

Scheduled Maintenance and Mechanical Repairs

One of the best ways for you to make sure that your vehicle provides years of service is to have it maintained in line with our recommendations using parts that conform to the specifications detailed in this Owner's Manual. Genuine Ford and Motorcraft parts meet or exceed these specifications.

Collision Repairs

We hope that you never experience a collision, but accidents do happen. Genuine Ford replacement collision parts meet our stringent requirements for fit, finish, structural integrity, corrosion protection and dent resistance. During vehicle development we validate these parts deliver the intended level of protection as a whole system. A great way to know for sure you are getting this level of protection is to use genuine Ford replacement collision parts.

Warranty on Replacement Parts

Genuine Ford and Motorcraft replacement parts are the only replacement parts that benefit from a Ford Warranty. Damage caused to your vehicle as a result of the failure of non-Ford parts may not be covered by the Ford Warranty. For additional information, refer to the terms and conditions of the Ford Warranty.

Front exterior overview

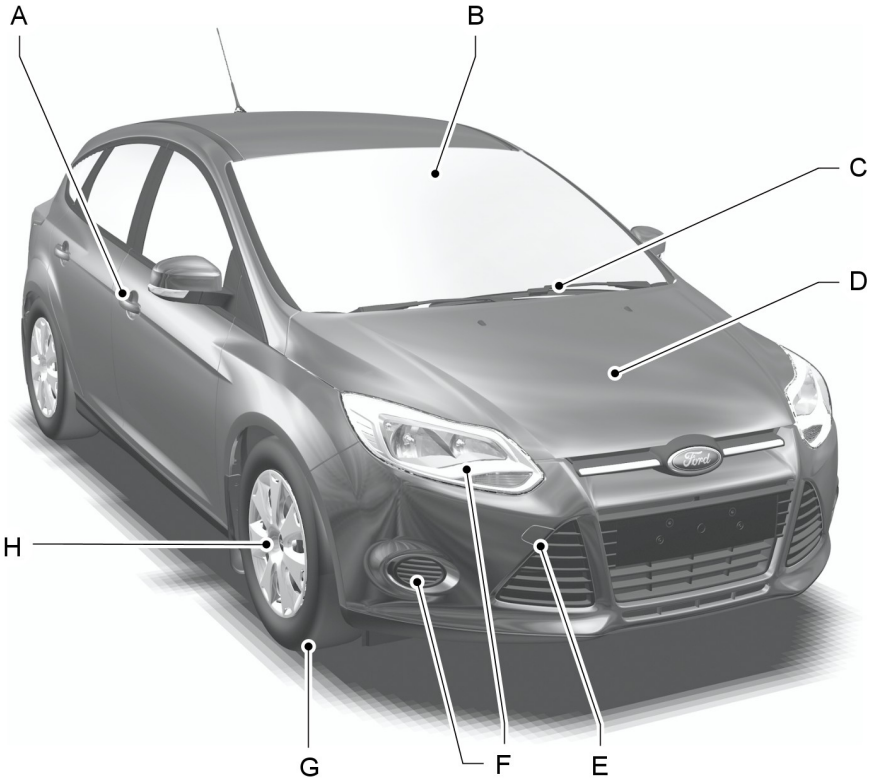

A See **Locking and Unlocking** (page 33). See **Keyless Entry** (page 35).

B See **Automatic Main Beam Control** (page 51). See **Driver Alert** (page 163). See **Lane Departure Warning** (page 165). See **Lane Keeping Aid** (page 167). See **Traffic Sign Recognition** (page 169). See **Active City Stop** (page 171).

C See **Changing the Wiper Blades** (page 47).

D See **Maintenance** (page 201).

E See **Towing Points** (page 199).

F See **Changing a Bulb** (page 58).
G Tyre pressures. See **Technical Specifications** (page 232).
H See **Changing a Road Wheel** (page 222).

Vehicle interior overview

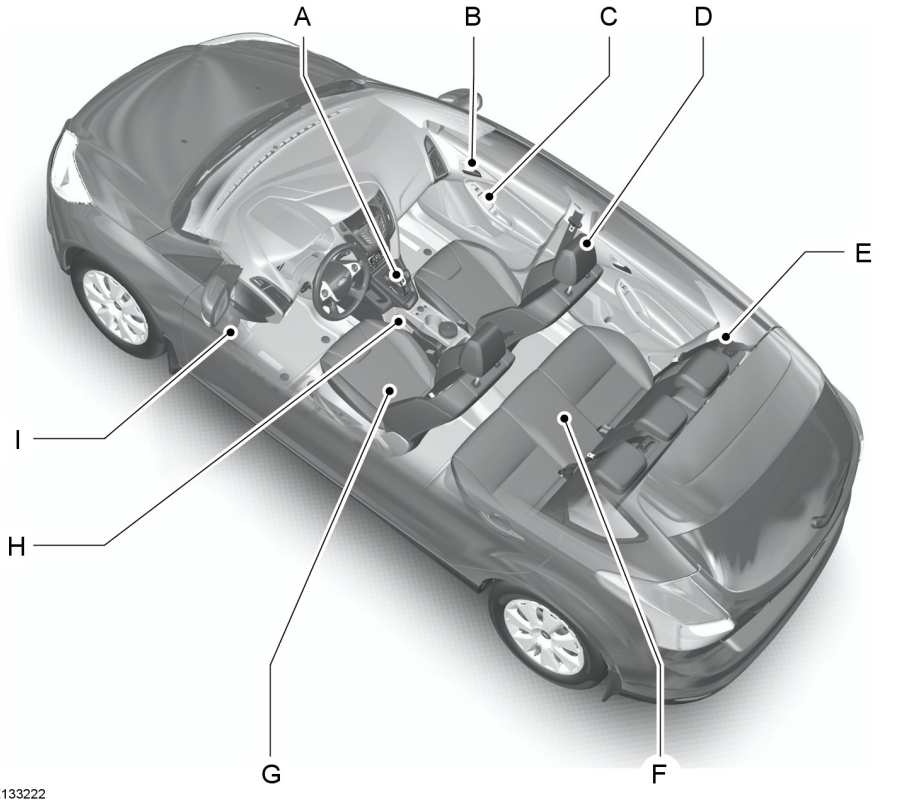

E133222

A See **Transmission** (page 137).
B See **Locking and Unlocking** (page 33).
C See **Power Windows** (page 66). See **Electric exterior mirrors** (page 68).

D See **Head Restraints** (page 111).
E See **Fastening the seat belts** (page 26).
F See **Rear Seats** (page 115).
G See **Manual Seats** (page 110). See **Power Seats** (page 113).
H See **Parking Brake** (page 140).
I See **Opening and Closing the Bonnet** (page 201).

Instrument panel overview

Left-hand drive

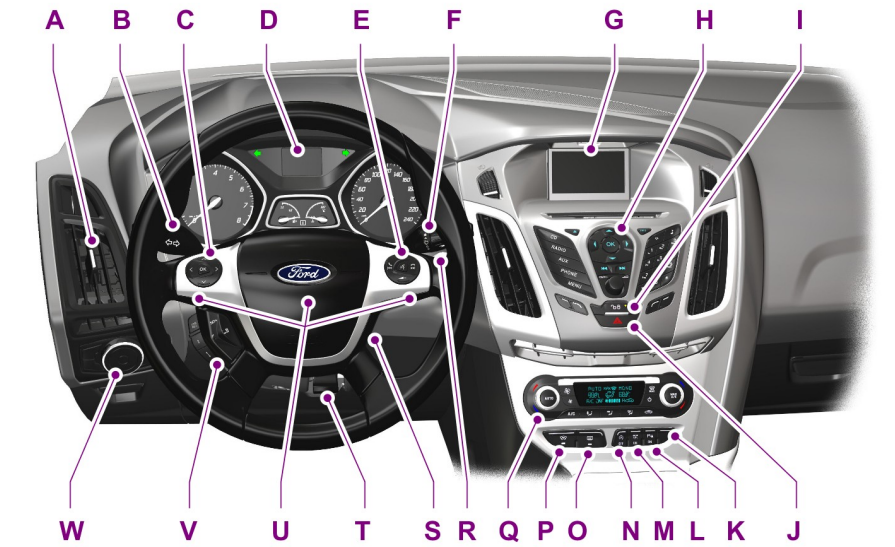

Right-hand drive

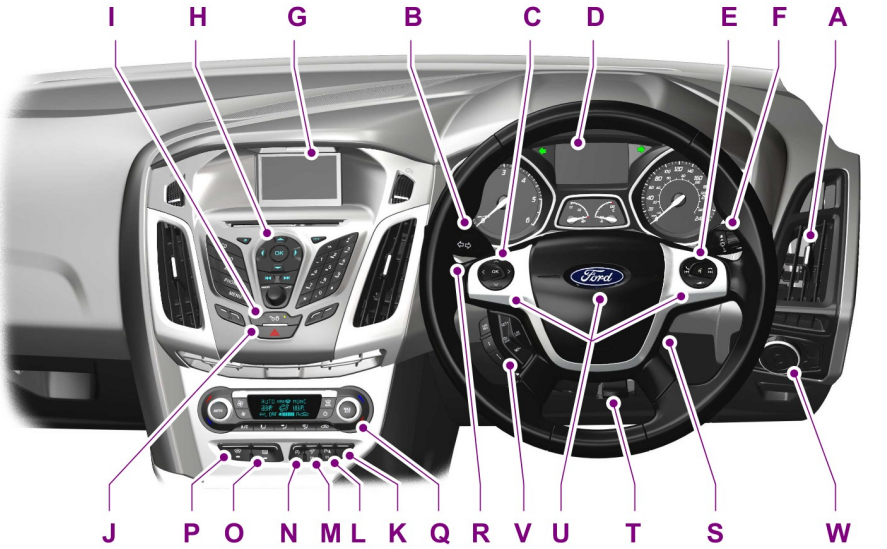

E164755

A Air vents. See **Air Vents** (page 99).

B Direction indicators. See **Direction Indicators** (page 54). Main beam. See **Lighting Control** (page 49).

C Information display control. See **Information Displays** (page 79).

D Instrument cluster. See **Gauges** (page 72). See **Warning Lamps and Indicators** (page 74).

E Audio control. See **Audio Control** (page 43). Voice control. See **Voice Control** (page 44). Telephone control. See **Telephone controls** (page 265).

F Wiper lever. See **Wipers and Washers** (page 45).

G Information and entertainment display.

H Audio unit. See **Audio unit overview** (page 245).

I Door lock button. See **Locking and Unlocking** (page 33).

J Hazard warning flasher switch. See **Hazard Warning Flashers** (page 54).

K Stability control switch. See **Using Stability Control** (page 142).

L Parking aid switch. See **Parking Aids** (page 145).

M Active park assist switch. See **Active Park Assist** (page 152).

N Start-stop switch. See **Using start-stop** (page 128).

O Heated rear window switch. See **Heated Windows and Mirrors** (page 105).

P Heated windscreen switch. See **Heated Windows and Mirrors** (page 105).

Q Climate controls. See **Climate Control** (page 99).

R Start button. See **Keyless Starting** (page 124).

S Ignition switch. See **Ignition Switch** (page 122).

T Steering wheel adjustment. See **Adjusting the Steering Wheel** (page 43).

U Horn.

V Cruise control switches. See **Using Cruise Control** (page 155). Adaptive cruise control (ACC) switches. See **Using Adaptive Cruise Control** (page 159). Speed limiter switches. See **Using the speed limiter** (page 162).

W Lighting control. See **Lighting Control** (page 49). Front fog lamps. See **Front Fog Lamps** (page 52). Rear fog lamp. See **Rear Fog Lamps** (page 53). Headlamp levelling control. See **Headlamp Levelling** (page 53). Instrument lighting dimmer. See **Instrument Lighting Dimmer** (page 118).

Rear exterior overview

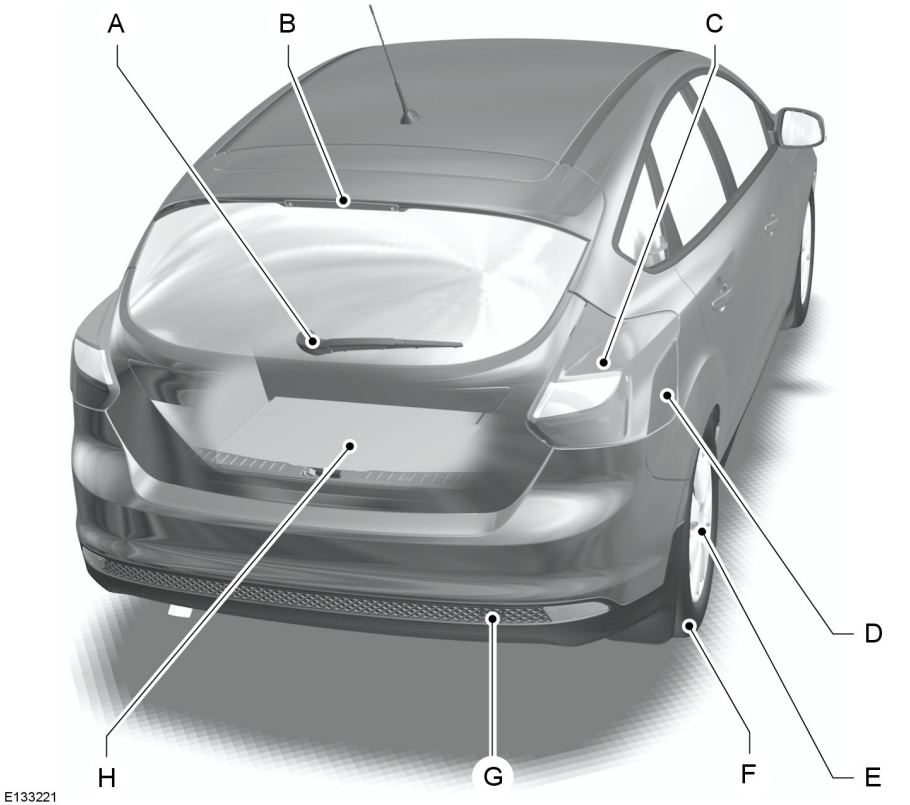

A See **Changing the Wiper Blades** (page 47).
B See **Changing a Bulb** (page 58).
C See **Changing a Bulb** (page 58).
D See **Fuel filler flap** (page 132).
E See **Changing a Road Wheel** (page 222).
F Tyre pressures. See **Technical Specifications** (page 232).

G See **Towing Points** (page 199).

H See **First Aid Kit** (page 188). See **Warning Triangle** (page 188). See **Temporary Mobility Kit** (page 226). Spare wheel. See **Changing a Road Wheel** (page 222). Jack. See **Changing a Road Wheel** (page 222). Wheel brace. See **Changing a Road Wheel** (page 222). Towing eye. See **Towing Points** (page 199). Fuel funnel. See **Fuel filler flap** (page 132).

CHILD SEATS

E133140

E68916

WARNINGS

Secure children that are less than 150 centimetres (59 inches) tall in a suitable, approved child restraint, in the rear seat.

Extreme Hazard! Do not use a rearward facing child restraint on a seat protected by an air bag in front of it!

Read and follow the manufacturer's instructions when you are fitting a child restraint.

Do not modify child restraints in any way.

Do not hold a child on your lap when the vehicle is moving.

WARNINGS

Do not leave unattended children in your vehicle.

If your vehicle has been involved in an accident, have the child restraints checked by properly trained technicians.

Note: *Mandatory use of child restraints varies from country to country.*

Only child restraints certified to ECE-R44.03 (or later) have been tested and approved for use in your vehicle. A choice of these are available from your Dealer.

Child restraints for different mass groups

Use the correct child restraint as follows:

Baby safety seat

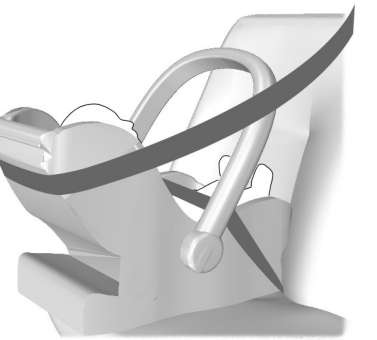

E68918

Secure children that weigh less than 13 kilograms (29 pounds) in a rearward facing baby safety seat (Group 0+) in the rear seat.

Child safety seat

E68920

Secure children that weigh between 13 and 18 kilograms (29 and 40 pounds) in a child safety seat (Group 1) in the rear seat.

CHILD SEAT POSITIONING

WARNINGS

Please consult your Dealer for the latest details relating to Ford recommended child seats.

WARNINGS

Extreme Hazard! Do not use a rearward facing child restraint on a seat protected by an air bag in front of it!

When using a child seat with a support leg, the support leg must rest securely on the floor.

When using a child seat with a seat belt, make sure that the seat belt is not slack or twisted.

CAUTION

The child seat must rest tightly against the vehicle seat. It may be necessary to lift or remove the head restraint. See **Head Restraints** (page 111).

Note: *When using a child seat on a front seat, always adjust the front passenger seat to its fully rearwards position. If it proves difficult to tighten the lap section of the seat belt without slack remaining, adjust the seatback to the fully upright position and raise the height of the seat. See* ***Seats*** *(page 110).*

Seating positions	Mass group categories				
	0	0+	1	2	3
	Up to 10 kg (22 lbs)	Up to 13 kg (29 lbs)	9 - 18 kg (20 - 40 lbs)	15 - 25 kg (33 - 55 lbs)	22 - 36 kg (49 - 79 lbs)
Front passenger seat with airbag **ON**	X	X	UF[1]	UF[1]	UF[1]
Front passenger seat with airbag **OFF**	U	U	U	U	U
Rear seats	U	U	U	U	U

X Not suitable for children in this mass group.

U Suitable for universal category child seats approved for use in this mass group.

UF[1] Suitable for universal category forward facing child restraints approved for use in this mass group. However, we recommend that you secure children in a government approved child restraint, in the rear seat.

ISOFIX child seats

Seating positions		Mass group categories	
		0+	1
		Rear facing	Forward facing
		Up to 13 kg (29 lbs)	9 - 18 kg (20 - 40 lbs)
Front seat	Size class	Not ISOFIX equipped	
	Seat type		
Rear outboard seat ISOFIX	Size class	C, D, E[1]	A, B, B1, C, D[1]
	Seat type	IL[2]	IL, IUF[3]

Seating positions		Mass group categories	
		0+	1
		Rear facing	Forward facing
		Up to 13 kg (29 lbs)	9 - 18 kg (20 - 40 lbs)
Rear centre seat	Size class	Not ISOFIX equipped	
	Seat type		

IL Suitable for particular ISOFIX child restraints systems of the **semi-universal** category. Please consult child restraints systems suppliers' vehicle recommendation lists.

IUF Suitable for ISOFIX forward facing child restraints systems of **universal** category approved for use in this mass group and ISOFIX size class.

[1]The ISOFIX size class for both **universal** and **semi-universal** child restraints systems is defined by the capital letters **A** to **G**. These identification letters are displayed on ISOFIX child restraints.

[2]At time of publishing the recommended Group O+ ISOFIX baby safety seat is the Britax Roemer Baby Safe. Please consult your Dealer for the latest details relating to Ford recommended child seats.

[3]At time of publishing the recommended Group 1 ISOFIX child seat is the Britax Roemer Duo. Please consult your Dealer for the latest details relating to Ford recommended child seats.

ISOFIX ANCHOR POINTS

WARNING

Use an anti-rotation device when using the ISOFIX system. We recommend the use of a top tether or support leg.

Note: *When you are purchasing an ISOFIX restraint, make sure that you know the correct mass group and ISOFIX size class for the intended seating locations. See* ***Child Seat Positioning*** *(page 19).*

Your vehicle is fitted with ISOFIX anchor points that accommodate universally approved ISOFIX child restraints.

The ISOFIX system comprises of two rigid attachment arms on the child restraint that attach to anchor points on the rear seats, where the cushion and backrest meet. Tether anchor points may also be fitted.

Top tether anchor points - 5-door and estate

E132902

Top tether anchor points - 4 door

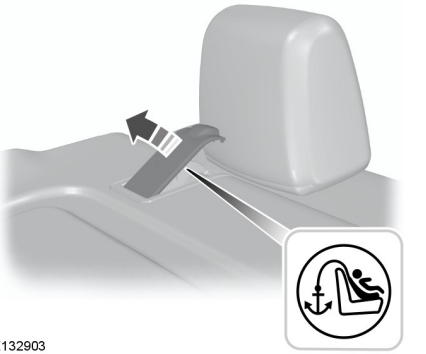

E132903

The tether anchor points are located under a flap.

Attaching a child seat with top tethers

WARNING

Do not attach a tether strap to anything other than the correct tether anchor point.

Note: *Where applicable, remove the luggage cover to ease installation. See* ***Luggage Covers*** *(page 173).*

WARNING

Make sure that the top tether strap is not slack or twisted and is properly located on the anchor point.

1. Route the tether strap to the anchor point.

E87145

2. Push the child seat back firmly to engage the ISOFIX lower anchor points.
3. Tighten the tether strap in line with the child seat manufacturer's instructions.

CHILD SAFETY LOCKS

WARNING

You cannot open the doors from inside if you have put the child safety locks on.

Manual child safety locks

Note: *On vehicles with keyless entry, use the spare key. See* ***Keyless Entry*** *(page 35).*

E78298

Left-hand side

Turn anti-clockwise to lock and clockwise to unlock.

Right-hand side

Turn clockwise to lock and anti-clockwise to unlock.

Electric child safety locks

Note: *Pressing the switch will also disable the rear electric window switches.*

E124779

PRINCIPLE OF OPERATION

Airbags

WARNINGS

Do not modify the front of your vehicle in any way. This could adversely affect deployment of the airbags.

Extreme Hazard! Do not use a rearward facing child restraint on a seat protected by an airbag in front of it!

Wear a seat belt and keep sufficient distance between yourself and the steering wheel. Only when you use the seat belt properly, can it hold you in a position that allows the airbag to achieve its optimum effect. See **Sitting in the Correct Position** (page 110).

Have repairs to the steering wheel, steering column, seats, airbags and seat belts carried out by a properly trained technician.

Keep the areas in front of the airbags free from obstruction. Do not affix anything to or over the airbag covers.

Do not poke sharp objects into areas where airbags are fitted. This could damage and adversely affect deployment of the airbags.

Use seat covers designed for seats with side airbags. Have these fitted by a properly trained technician.

Note: *You will hear a loud bang and see a cloud of harmless powdery residue if an airbag deploys. This is normal.*

Note: *Only wipe airbag covers with a damp cloth.*

Front airbags

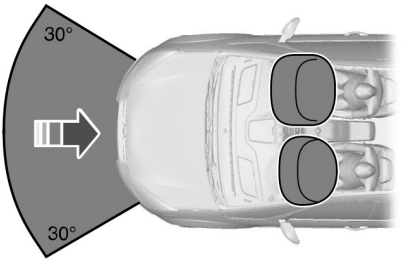

E74302

The driver airbag, front passenger airbag and the front seat belt pretensioners will deploy during significant frontal collisions or collisions that are up to 30 degrees from the left or the right. The airbags will inflate within a few thousandths of a second and deflate on contact with the occupants, thus cushioning forward body movement. During minor frontal collisions, overturns, rear collisions and side collisions, the driver and front passenger airbags will not deploy.

Side and curtain airbags

During significant lateral collisions, only the airbags on the side affected by the collision and the front seat belt pretensioners will deploy. The airbags will inflate within a few thousandths of a second and deflate on contact with the occupants, thus providing protection for the body. The side and curtain airbags will not deploy during minor lateral collisions, front collisions, rear collisions or overturns.

Side airbags

E72658

Side airbags are fitted inside the seatback of the front seats. A label indicates that side airbags are fitted to your vehicle.

Curtain airbags

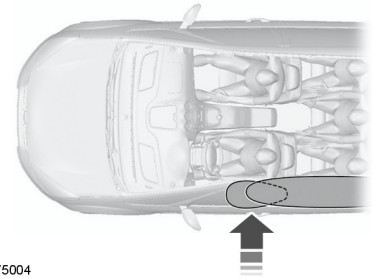

E75004

Curtain airbags are fitted inside the trim panels over the front and rear side windows. Moulded badges in the B-pillar trim panels indicate that curtain airbags are fitted to your vehicle.

Seat belts

WARNINGS

Wear a seat belt and keep sufficient distance between yourself and the steering wheel. Only when you use the seat belt properly, can it hold you in a position to achieve its optimum effect. See **Sitting in the Correct Position** (page 110).

WARNINGS

Never use a seat belt for more than one person.

Use the correct buckle for each seat belt.

Do not use a seat belt that is slack or twisted.

Do not wear thick clothing. The seat belt must fit tightly around your body to achieve its optimum effect.

Position the shoulder strap of the seat belt over the centre of your shoulder and position the lap strap tightly across your hips.

The driver and front passenger seat belt systems are fitted with a seat belt pretensioner. Seat belt pretensioners have a lower deployment threshold than the airbags. During minor collisions, it is possible that only the seat belt pretensioners will deploy.

Status after a collision

WARNINGS

Seat belts subjected to strain, as a result of an accident, should be renewed and the anchorages checked by a properly trained technician.

If a seat belt pretensioner has been deployed the seat belt must be renewed.

FASTENING THE SEAT BELTS

WARNING

Insert the tongue into the buckle until you hear a distinct click. You have not fastened the seat belt properly if you do not hear a click.

E74124

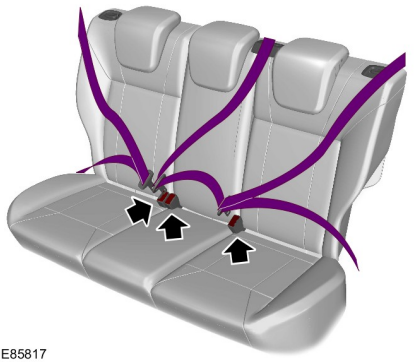

E85817

Pull the belt out steadily. It may lock if you pull it sharply or if the vehicle is on a slope.

Press the red button on the buckle to release the belt. Let it retract completely and smoothly.

SEAT BELT HEIGHT ADJUSTMENT

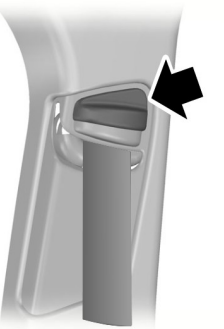

E87511

Note: *Lifting the slider slightly while pressing the locking button makes it easier to release the locking mechanism.*

To raise or lower, press the locking button on the adjuster and move as necessary.

SEAT BELT REMINDER

WARNING

The occupant protection system will only provide optimum protection when you use the seat belt properly.

The seat belt reminder warning lamp illuminates and an audible warning will sound if the driver's or front seat passenger's seat belt has not been fastened and the vehicle exceeds a relatively low speed. It will also illuminate if the driver's or front seat passenger's seat belt is unfastened when the vehicle is moving. The audible warning will go off after a few minutes but the seat belt reminder warning lamp will remain on until the driver's or front seat passenger's seat belt is fastened.

Rear seat belt reminder

WARNING

If multiple belts are unfastened within a few seconds of each other, only one audible chime will sound.

Note: *Press the **OK** button on the steering wheel control to confirm the message.*

A visual reminder of the seat belt status will be shown on the instrument display once the engine is started, and once again if any are unfastened when the vehicle is moving.

Fastened seat belts are indicated by a tick symbol.

If a belt is unfastened when the vehicle is moving, the seat belt status screen will be displayed and the relevant seats will be highlighted by an exclamation mark. An audible chime will also sound.

Deactivating the seat belt reminder

See your dealer.

USING SEAT BELTS DURING PREGNANCY

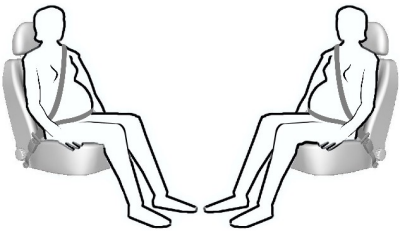

E68587

WARNING

Position the seat belt correctly for your safety and that of your unborn child. Do not use only the lap strap or the shoulder strap.

Position the lap strap comfortably across your hips and low beneath your pregnant abdomen. Position the shoulder strap between your breasts, above and to the side of your pregnant abdomen.

DISABLING THE PASSENGER AIRBAG

WARNING

Make sure that the passenger airbag is disabled when using a rearward facing child restraint on the front passenger seat.

E71313

Fitting the passenger airbag deactivation switch

WARNING

If you need to fit a child restraint on a seat protected by an operational airbag in front of it, have a passenger airbag deactivation switch fitted. Ask your dealer for further information.

Note: *The key switch is located in the glove compartment with an airbag deactivation lamp in the overhead console.*

If the airbag warning lamp illuminates or flashes when you are driving, this indicates a malfunction. See **Warning Lamps and Indicators** (page 74). Remove the child restraint and have the system checked immediately.

Disabling the passenger airbag

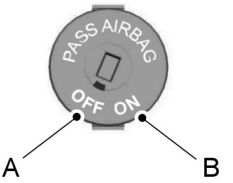

E71312

A Disabled

B Enabled

Turn the switch to position **A**.

When you switch the ignition on, check that the passenger airbag deactivation warning lamp illuminates.

Enabling the passenger airbag

WARNING

Make sure that the passenger airbag is enabled when you are **not** using a child restraint on the front passenger seat.

Turn the switch to position **B**.

GENERAL INFORMATION ON RADIO FREQUENCIES

CAUTIONS

The radio frequency used by your remote control can also be used by other short distance radio transmissions (e.g. amateur radios, medical equipment, wireless headphones, remote controls and alarm systems). If the frequencies are jammed, you will not be able to use your remote control. You can lock and unlock the doors with the key.

Check your vehicle is locked before leaving it unattended. This will safeguard against any potential malicious frequency blocking.

Note: *You could unlock the doors if you press the buttons on the remote control unintentionally.*

The operating range between your remote control and your vehicle varies depending on the environment.

PROGRAMMING THE REMOTE CONTROL

You can programme a maximum of eight remote controls to use with your vehicle (including any supplied with your vehicle).

Programming a new remote control

1. Insert the key in the ignition.
2. Cycle the key from position **0** to **II** and then back to **0** four times within six seconds.
3. Leave the key in position **0** and press any button on the remote control within 10 seconds. You will receive confirmation via a chime or LED that programming has been successful.

Note: *Further remote controls may be programmed at this stage.*

4. Press any button on each additional remote control within 10 seconds of each other.

Reprogramming the unlocking function

Note: *When you press the unlock button either all the doors are unlocked or only the driver's door is unlocked. Pressing the unlock button again unlocks all the doors.*

Press and hold the unlock and lock buttons on the remote key simultaneously for at least four seconds with the ignition off. The direction indicators will flash twice to confirm the change.

To return to the original unlocking function, repeat the process.

CHANGING THE REMOTE CONTROL BATTERY

Make sure that you dispose of old batteries in an environmentally friendly way. Seek advice from your local authority regarding recycling.

Remote control with a folding key blade

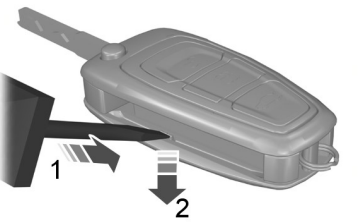

E128809

1. Insert a screwdriver in the position shown and gently push the clip.
2. Press the clip down to release the battery cover.

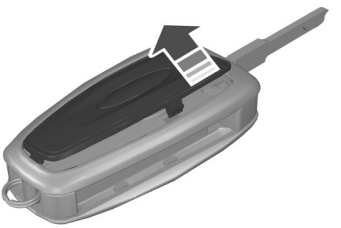

E128810

3. Carefully remove the cover.

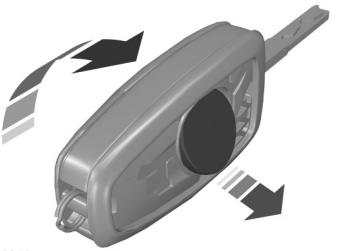

E128811

4. Turn the remote control over to remove the battery.
5. Install a new battery (3V CR 2032) with the + facing upwards.
6. Replace the battery cover.

Remote control without a folding key blade

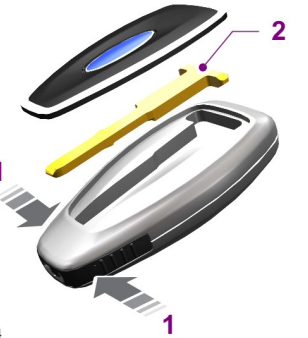

E87964

1. Press and hold the pushbuttons on the edges to release the cover. Carefully remove the cover.
2. Remove the key blade.

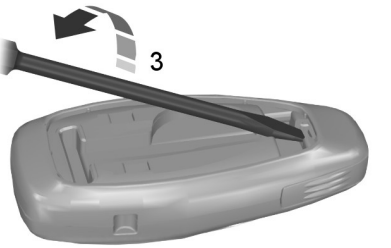

E105362

3. Twist a flat bladed screwdriver in the position shown to separate the two halves of the remote control.

E119190

4. Carefully insert the screwdriver in the position shown to open the remote control.

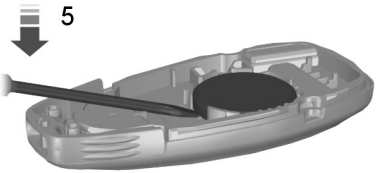

E125860

CAUTION

Do not touch the battery contacts or the printed circuit board with the screwdriver.

5. Carefully prise out the battery with the screwdriver.
6. Install a new battery (3V CR 2032) with the + facing downwards.
7. Assemble the two halves of the remote control.
8. Install the key blade.

LOCKING AND UNLOCKING

CAUTION

Check your vehicle is locked before leaving it unattended.

Note: *Do not leave your keys in the vehicle.*

Locking

Locking with the key

Turn the top of the key towards the front of the vehicle.

Locking with the remote control

Note: *The driver's door can be locked with the key. This needs to be used if the remote control is not functioning.*

Note: *Your vehicle can be locked with a rear door open. The door will be locked when it is closed.*

Press the button.

Double locking

WARNING

Do not activate double locking when persons or animals are inside the vehicle. You will not be able to unlock the doors from the inside if you have double locked them.

Note: *If you double lock your vehicle whilst inside, switch the ignition on to return the door locks to a single locked state.*

Note: *Your vehicle can be double locked with a rear door open. The door will be double locked when it is closed.*

Double locking is a theft protection feature that prevents someone from opening the doors from the inside.

Double locking with the key

Turn the key to the lock position twice within three seconds.

Double locking with the remote control

Press the button twice within three seconds.

Unlocking

Unlocking with the key

Turn the top of the key towards the rear of the vehicle.

Unlocking with the remote control

Note: *The driver's door can be unlocked with the key. This needs to be used if the remote control is not functioning.*

Note: *If the vehicle remains locked for several weeks, the remote control will be disabled. The vehicle must be unlocked and the engine started using the key. Unlocking and starting the vehicle once will enable the remote control.*

Press the button.

Automatic relocking

The doors will relock automatically if you do not open a door, the luggage compartment lid, or turn on the ignition within 45 seconds of unlocking the doors with the remote control. The doors lock and the alarm will return to its previous state.

Reprogramming the unlocking function

The unlocking function may be reprogrammed so that only the driver's door is unlocked (See **Programming the remote control** (page 30).).

Locking and unlocking confirmation

Note: *If your vehicle has double locking, the direction indicators will flash once after you have activated central locking, followed by two further flashes after double locking.*

When you lock the doors, the direction indicators will flash once.

When you double lock the doors, the direction indicators will flash three times.

When you unlock the doors, the direction indicators will flash once.

Locking and unlocking the doors from inside

Press the button. For item location: See **At a Glance** (page 11).

Luggage compartment lid

Opening the luggage compartment lid with the remote control

Press the button twice within three seconds.

Closing the luggage compartment lid

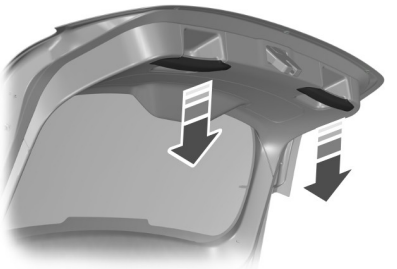

E133536

Locking the doors individually with the key

Note: *If the central locking function fails to operate, the doors can be individually locked using the key in the position shown.*

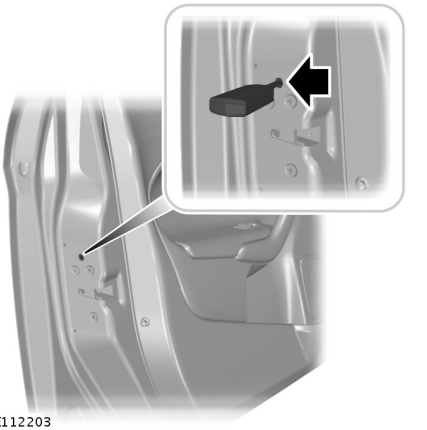

E112203

Left-hand side

Turn clockwise to lock.

Right-hand side

Turn anti-clockwise to lock.

Unlocking

Note: *If the child safety locks have also been activated, pulling the internal lever will only deactivate the emergency locking and not the child safety lock. The doors can only be opened using the external door handle.*

Note: *If the doors have been unlocked using this method, the doors must be locked individually until the central locking function has been repaired.*

Unlock the driver's door using the key. The other doors can be unlocked individually by pulling the interior door handles on those doors.

KEYLESS ENTRY

General information

WARNING

The keyless entry system may not function if the key is close to metal objects or electronic devices such as mobile phones.

The passive entry system will not function if:

- The vehicle battery is flat.
- The passive key frequencies are jammed.
- The passive key battery is flat.

Note: *If the passive entry system does not function, you will need to use the key blade to lock and unlock your vehicle.*

The keyless system allows the driver to operate the vehicle without the use of a key or remote control.

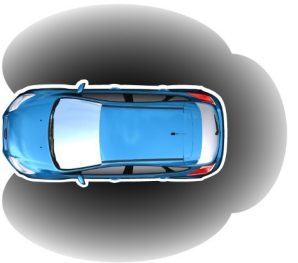

E78276

Passive locking and unlocking requires a valid passive key to be located within one of the three external detection ranges. These are located approximately one and a half metres from the driver and front passenger door handles and the luggage compartment lid.

Passive key

The vehicle can be locked and unlocked with the passive key. The passive key can also be used as a remote control. See **Locking and Unlocking** (page 33).

Locking the vehicle

WARNING

The vehicle does not lock itself automatically. If the locking function is not activated, the vehicle will remain unlocked.

Note: *The ignition will automatically switch off when you lock your vehicle from the outside. This is to prevent the vehicle battery from discharging.*

Note: *Do not grab the door handle.*

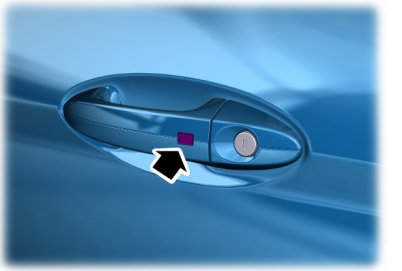

E87384

Touch a front door handle lock sensor to lock the vehicle.

To activate central locking and arm the alarm:

- Touch a front door handle lock sensor once.

To activate double locking and arm the alarm:

- Touch a front door handle lock sensor twice within three seconds.

Note: *There must be clearance between each touch of the door handle.*

Note: *Once activated, the vehicle will remain locked for approximately three seconds. When the delay period is over, the doors can be opened again, provided the passive key is within the respective detection range.*

Two short flashes of the direction indicators confirms that all the doors and the luggage compartment lid have been locked and that the alarm has been armed.

Luggage compartment lid

Note: *The luggage compartment lid cannot be closed and, will pop back up if the passive key is located inside the vehicle with the doors locked.*

Note: *If a second valid passive key is located within the rear exterior detection range, the luggage compartment lid can be closed.*

Unlocking the vehicle

Note: *If the vehicle remains locked for longer than three days, the keyless system will enter an energy-saving mode. This is to reduce the discharge of the vehicle battery. When the vehicle is unlocked while in this mode, the reaction time of the system may be a little longer than normal. Unlocking the vehicle once will deactivate the energy-saving mode.*

Note: *If the vehicle remains locked for several weeks, the keyless system will be disabled. The vehicle must be unlocked using the key blade. Unlocking the vehicle once will enable the keyless system.*

Note: *Do not touch the front door handle lock sensor when opening a door.*

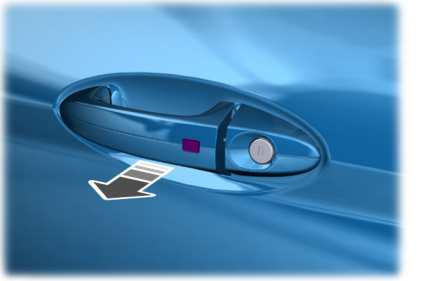

E78278

Open any door.

Note: *A valid passive key must be located within the detection range of that door.*

One long flash of the direction indicators confirms that all the doors and the luggage compartment lid have been unlocked and that the alarm has been disarmed.

Unlocking only the driver's door

If the unlocking function is reprogrammed so that only the driver's door and the luggage compartment lid are unlocked (See **Programming the remote control** (page 30).), note the following:

If the driver's door is the first door which is opened, the other doors will remain locked. All the other doors can be unlocked from inside the vehicle by pressing the unlock button on the instrument panel. For item location: See **At a Glance** (page 11). Doors can be unlocked individually by pulling the interior door handles on those doors.

Disabled keys

Any keys left inside the vehicle interior when it is locked will be disabled.

A disabled key cannot be used to turn the ignition on or start the engine.

In order to use these passive keys again, they have to be enabled.

To enable all your passive keys, unlock the vehicle using a passive key or the remote control unlocking function.

All passive keys will then be enabled if the ignition is turned on or the vehicle is started using a valid key.

Locking and unlocking the doors with the key blade

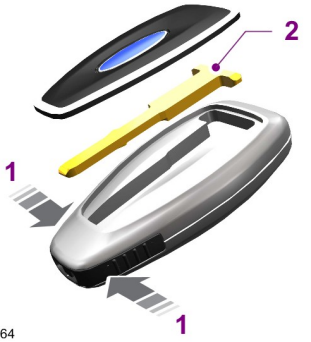

E87964

1. Carefully remove the cover.
2. Remove the key blade and insert it into the lock.

Note: *Only the driver's door handle is fitted with a lock cylinder.*

GLOBAL OPENING AND CLOSING

You can also operate the electric windows with the ignition off via the global opening and global closing function.

Note: *Global opening will only operate for a short period of time after you have unlocked your vehicle using the remote control.*

Note: *Global closing will only operate if you have set the memory correctly for each window. See* ***Power Windows*** *(page 66).*

Global opening

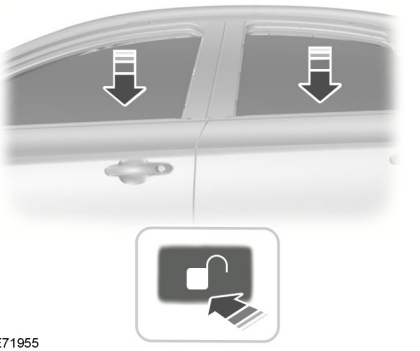

E71955

To open all the windows, press and hold the remote control **unlock** button for at least three seconds. Press the lock or unlock button to stop the opening function.

Global closing

Vehicles without keyless entry

WARNING

Take care when using global closing. In an emergency, press the lock or unlock button immediately to stop.

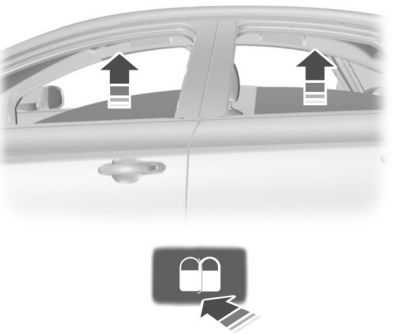

E71956

To close all the windows, press and hold the remote control **lock** button for at least three seconds. Press the lock or unlock button to stop the closing function. The anti-trap function is also active during global closing.

Vehicles with keyless entry

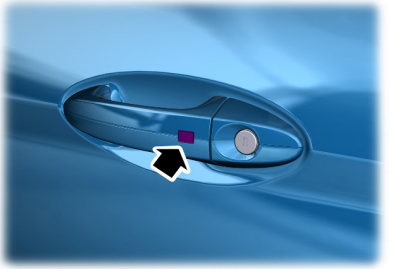

E87384

WARNING

Take care when using global closing. In an emergency, touch a door handle lock sensor to stop.

Note: *Global closing can be activated using the driver's door handle. Global opening and closing can also be activated using the buttons on the passive key.*

To close all the windows, press and hold the driver's door handle for at least two seconds. The anti-trap function is also active during global closing.

PRINCIPLE OF OPERATION

Note: *The protective flap may be moved gently out of position when the door is open to allow access for cleaning. Make sure that the flap is repositioned correctly otherwise the flap may not retract when you attempt to close the door.*

Note: *Keep the door edges free from obstructions such as heavy dirt and snow or ice.*

The front and rear doors have a retractable plastic flap that will move into position when you open a door. The flap will protect the door edge from damage that may be caused by contact with other objects and obstacles.

If the door edge protector does not move freely or becomes stuck, do not attempt to move it. Have your vehicle checked by an authorised dealer.

PRINCIPLE OF OPERATION

The engine immobiliser is a theft protection system that prevents someone from starting the engine with an incorrectly coded key.

CODED KEYS

Note: *Do not shield your keys with metal objects. This may prevent the receiver from recognising your key as a valid one.*

Note: *Have all of your remaining keys erased and recoded if you lose a key. Ask your dealer for further information. Have replacement keys recoded together with your existing keys.*

If you lose a key, you can obtain a replacement from your Ford Dealer. If possible, provide them with the key number from the tag provided with the original keys. You can also obtain additional keys from your Ford Dealer.

ARMING THE ENGINE IMMOBILISER

The engine immobiliser is armed automatically a short time after you have switched the ignition off.

DISARMING THE ENGINE IMMOBILISER

The engine immobiliser is disarmed automatically when you switch the ignition on with a correctly coded key.

PRINCIPLE OF OPERATION

Alarm system

Your vehicle may be equipped with one of the following alarm systems:

- Perimeter alarm.
- Perimeter alarm with interior sensors.
- Category one alarm with interior sensors and battery back-up sounder.

Perimeter alarm

The perimeter alarm is a deterrent against unauthorised access to your vehicle through the doors and the bonnet. It also protects the audio unit.

Interior sensors

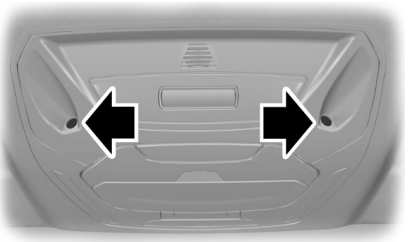

E129005

WARNING

The sensors in the interior lamp unit must not be covered up. Do not activate the alarm with full guard if any persons, animals or other moving objects are inside the vehicle.

The sensors act as a deterrent against unauthorised intrusion by sensing any movement within the vehicle.

Battery back-up sounder

The battery back-up sounder is an extra alarm system which will sound a siren when the alarm is triggered. It is armed directly when you lock the vehicle. The sounder has its own battery and will sound an alarm siren even if someone disconnects the vehicle battery or the battery back-up sounder itself.

Triggering the alarm

Once armed, the alarm is triggered in any of the following ways:

- If someone opens a door, the tailgate or the bonnet without a valid key or remote control.
- If someone removes the audio or navigation system.
- If the ignition is turned to position **I**, **II** or **III** without a valid key.
- If the interior sensors detect movement within the vehicle.
- On vehicles with a battery back-up sounder, if someone disconnects the vehicle battery or the battery back-up sounder itself.

If the alarm is triggered, the alarm horn will sound for 30 seconds and the hazard warning flasher will flash for five minutes.

Any further attempts to perform one of the above will trigger the alarm again.

Full and reduced guard

Full guard

Full guard is the standard setting.

In full guard, the interior sensors are activated when you arm the alarm.

Note: *This may result in false alarms if animals or moving objects are inside the vehicle.*

Note: *False alarms can also be triggered by the auxiliary heater See* ***Auxiliary Heater*** *(page 107). If you are using the auxiliary heater, direct the air flow towards the footwell.*

Reduced guard

In reduced guard, the interior sensors are deactivated when you arm the alarm.

Note: *You can set the alarm to reduced guard for the current ignition cycle only. The next time you switch on the ignition, the alarm will be reset to full guard.*

Ask on Exit

You can set the information display to ask you each time which level of guard you wish to set.

If you select **Ask on Exit**, the message **Reduced guard?** appears in the instrument cluster display each time you switch the ignition off.

If you wish to arm the alarm with reduced guard, press the **OK** button when this message appears.

If you wish to arm the alarm with full guard, leave the vehicle without pressing the **OK** button.

Selecting full or reduced guard

Note: *Selecting* ***Reduced*** *does not set the alarm permanently to reduced guard. It sets it to reduced guard only for the current ignition cycle. If you regularly set the alarm to reduced guard, select* ***Ask on Exit****.*

You can select full or reduced guard using the information display. See **General Information** (page 79).

Information messages

See **Information Messages** (page 87).

ARMING THE ALARM

To arm the alarm, lock the vehicle. See **Locks** (page 33).

DISARMING THE ALARM

Vehicles without keyless entry

Perimeter alarm

Disarm and silence the alarm by unlocking the doors with the key and switching the ignition on with a correctly coded key, or unlocking the doors or the luggage compartment lid with the remote control.

Category one alarm

Disarm and silence the alarm by unlocking the doors with the key and switching the ignition on with a correctly coded key within 12 seconds, or unlocking the doors or the luggage compartment lid with the remote control.

Vehicles with keyless entry

Note: *A valid passive key must be located within the detection range of that door for keyless entry. See* ***Keyless Entry*** *(page 35).*

Perimeter alarm

Disarm and silence the alarm by unlocking the doors and switching the ignition on, or unlocking the doors or the luggage compartment lid with the remote control.

Category one alarm

Disarm and silence the alarm by unlocking the doors and switching the ignition on within 12 seconds, or unlocking the doors or the luggage compartment lid with the remote control.

ADJUSTING THE STEERING WHEEL

WARNING

Never adjust the steering wheel when the vehicle is moving.

Note: *Make sure that you are sitting in the correct position. See* ***Sitting in the Correct Position*** *(page 110).*

E95178

E95179

WARNING

Make sure that you fully engage the locking lever when returning it to its original position.

AUDIO CONTROL

Select the required source on the audio unit.

You can operate the following functions with the control:

Type 1

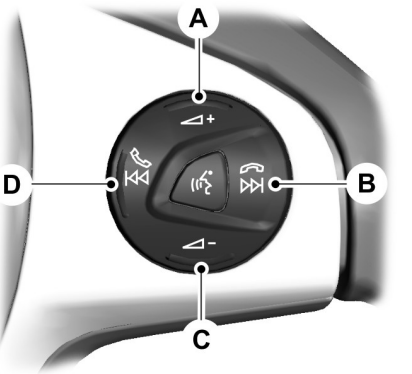

E159789

A	Volume up
B	Seek up, next or end call
C	Volume down
D	Seek down, previous or accept call

Type 2

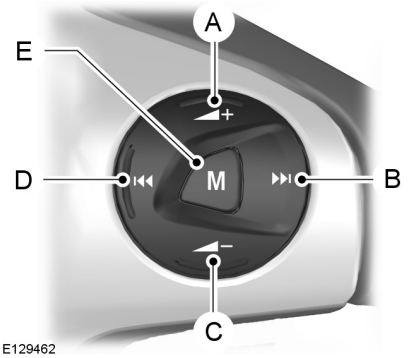

E129462

A	Volume up
B	Seek up or next
C	Volume down
D	Seek down or previous
E	Mode

Press **M** to select the audio source.

Seek, Next or Previous

Press the seek button to:

- tune the radio to the next or previous stored preset
- play the next or the previous track.

Press and hold the seek button to:

- tune the radio to the next station up or down the frequency band
- seek through a track.

VOICE CONTROL

E159531

Press the button to select or deselect voice control. See **SYNC™** (page 306).

WINDSCREEN WIPERS

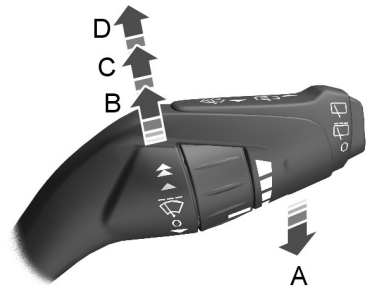

E128444

A Single wipe
B Intermittent wipe or autowipers
C Normal wipe
D High speed wipe

Intermittent wipe

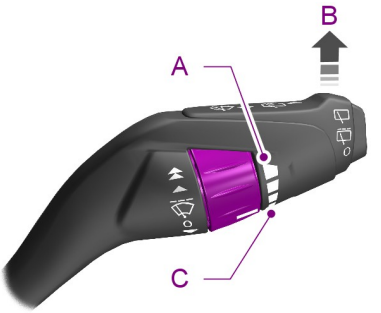

E128445

A Short wipe interval
B Intermittent wipe
C Long wipe interval

The rotary control can be used to adjust the intermittent wipe interval.

Automatic wiper system

Some models without autowipers are fitted with a speed-dependent front screen wiper system.

When the vehicle is slowed to walking speed or is brought to a standstill, the wiper speed will automatically switch to the next lower wiper speed setting.

When the vehicle speed is increased, the wiper speed will return to the manually-chosen setting.

Moving the wiper lever when the system is operating will switch off the system.

If the vehicle is again slowed to walking speed or is brought to a standstill, the system is reactivated.

AUTOWIPERS

CAUTIONS

Do not switch autowipers on in dry weather conditions. The rain sensor is very sensitive and the wipers may operate if dirt, mist or flies hit the windscreen.

Replace the wiper blades as soon as they begin to leave bands of water and smears. If you do not replace them, the rain sensor will continue to detect water on the windscreen and the wipers will operate, even though the majority of the windscreen is dry.

Fully defrost the windscreen in icy conditions before you switch autowipers on.

Switch autowipers off before you enter a car wash.

Note: *If autolamps have been switched on in conjunction with autowipers, dipped headlamps will illuminate automatically when the rain sensor activates the windscreen wipers continuously.*

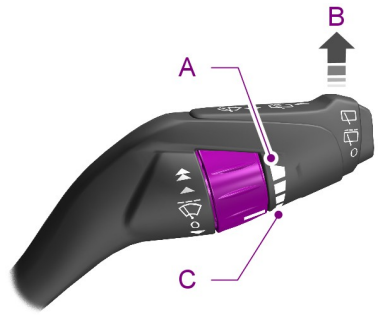

E128445

A High sensitivity
B On
C Low sensitivity

If you switch autowipers on, the wipers will not cycle until water is detected on the windscreen. The rain sensor will then continuously measure the amount of water on the windscreen and adjust the speed of the wipers automatically.

Adjust the sensitivity of the rain sensor using the rotary control. With low sensitivity, the wipers will operate when the sensor detects a lot of water on the windscreen. With high sensitivity, the wipers will operate if the sensor detects a small amount of water on the windscreen.

WINDSCREEN WASHERS

E129188

WARNING

Do not operate the washer for more than 10 seconds at a time, and never when the reservoir is empty.

Whilst the lever is pulled towards the steering wheel the washer will work in conjunction with the wipers.

After releasing the lever, the wipers operate for a short time.

REAR WINDOW WIPER AND WASHERS

Intermittent wipe

E129193

A Intermittent wipe
B Low speed wipe

Press the button at the end of the lever to change between off, intermittent and low speed.

Reverse gear wipe

The rear wiper will be activated automatically when selecting reverse gear if the rear wiper is not already switched on and the front wiper is operating.

Rear window washer

E129194

WARNING

Do not operate the washer for more than 10 seconds at a time, and never when the reservoir is empty.

While the lever is pushed away from the steering wheel the washer will work in conjunction with the wipers.

After releasing the lever, the wipers operate for a short time.

HEADLAMP WASHERS

The headlamp washers will operate with the windscreen washers when the headlamps are on.

Note: *To stop the washer fluid reservoir emptying quickly, the headlamp washers will not operate every time that you use the windscreen washers.*

CHECKING THE WIPER BLADES

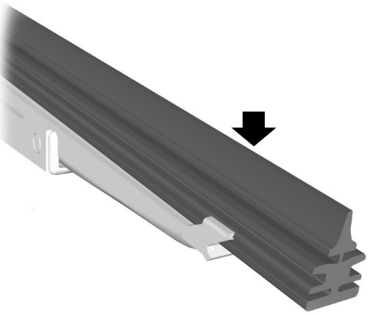

E66644

Run the tip of your fingers over the edge of the blade to check for roughness.

Clean the wiper blade lips with water applied with a soft sponge.

CHANGING THE WIPER BLADES

Windscreen wiper blades

CAUTIONS

Set the windscreen wipers in the service position to change the wiper blades.

You can use the service position in winter to provide easier access to the wiper blades for freeing them from snow and ice. The windscreen wipers will return to their normal position as soon as you switch on the ignition so make sure that the outside of the windscreen is free from snow and ice before you switch on the ignition.

Service position

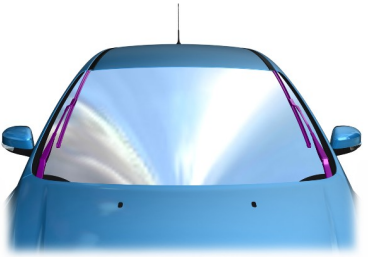

E75184

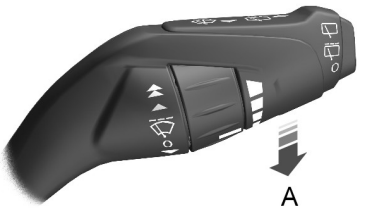

E129986

Switch off the ignition and move the wiper lever to position **A** within three seconds. Release the lever when the windscreen wipers have moved to the service position.

Changing the windscreen wiper blades

Set the windscreen wipers in the service position and lift the wiper arms.

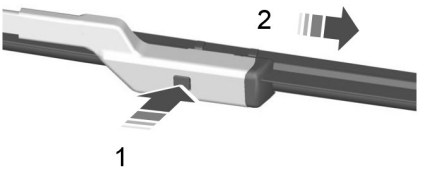

E72899

Install in the reverse order.

Note: *Make sure that the wiper blade locks into place.*

Rear window wiper blade

1. Lift the wiper arm.

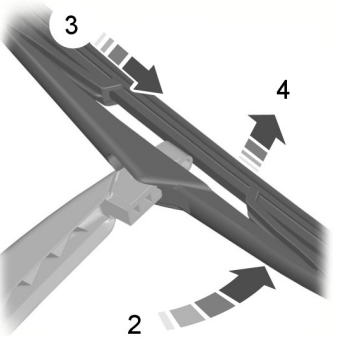

E86456

2. Position the wiper blade at right angles to the wiper arm.
3. Disengage the wiper blade from the wiper arm.
4. Remove the wiper blade.

Note: *Make sure that the wiper blade locks into place.*

5. Install in the reverse order.

GENERAL INFORMATION

Condensation in Lamp Assemblies

Exterior lamps have vents to accommodate normal changes in air pressure.

Condensation can be a natural by-product of this design. When moist air enters the lamp assembly through the vents, there is a possibility that condensation can occur when the temperature is cold. When normal condensation occurs, a fine mist can form on the interior of the lens. The fine mist eventually clears and exits through the vents during normal operation.

Clearing time may take as long as 48 hours under dry weather conditions.

Examples of acceptable condensation are:

- The presence of a fine mist (no streaks, drip marks or large droplets).
- A fine mist covers less than 50% of the lens.

Examples of unacceptable condensation are:

- A water puddle inside the lamp.
- Streaks, drip marks or large droplets present on the interior of the lens.

If you see any unacceptable condensation, have your vehicle checked by an authorised dealer.

LIGHTING CONTROL

Lighting control positions

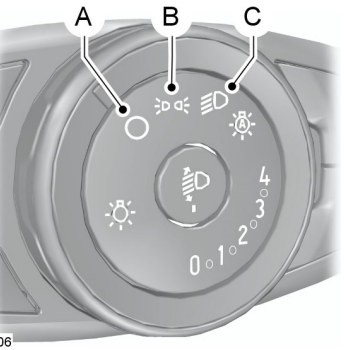

A	Off
B	Side and tail lamps
C	Headlamps

Parking lamps

WARNING

Prolonged use of the parking lamps will discharge the battery.

Switch off the ignition.

Both sides

Turn the lighting control switch to position **B**.

One side

E130139

A	Right-hand side
B	Left-hand side

Main and dipped beam

E130140

Push the lever forward to switch between main and dipped beam.

Headlamp flasher

Pull the lever slightly towards the steering wheel.

Home safe lighting

Switch the ignition off and pull the direction indicator lever towards the steering wheel to switch the headlamps on. You will hear a short tone. The headlamps will go off automatically after three minutes with any door open, or 30 seconds after the last door has been closed.

The home safe lights can be cancelled by either pulling the direction indicator lever towards the steering wheel again or by turning the ignition switch ON.

AUTOLAMPS

WARNING

In severe weather conditions, it may be necessary to switch your headlamps on manually.

Note: *If you have switched autolamps on, you can only switch the main beam on when autolamps has switched the headlamps on.*

Note: *If autolamps have been switched on in conjunction with autowipers, dipped headlamps will illuminate automatically when the rain sensor activates the windscreen wipers continuously.*

E132707

The headlamps will come on and go off automatically depending on the ambient light.

The headlamps will remain on for a period of time after you switch the ignition off. You can adjust the time delay using the information display. See **Information Displays** (page 79).

AUTOMATIC MAIN BEAM CONTROL

WARNINGS

The system does not relieve you of your responsibility to drive with due care and attention. A manual override may be necessary if the system fails to switch the main beam on or off.

A manual override may be required when approaching other road users such as cyclists.

Do not use the system in fog.

CAUTIONS

In cold and severe weather conditions the system may not function. A manual override may be necessary in these cases.

Reflective road signs may be detected as oncoming traffic and the headlamps may be switched to dipped beam.

If the lights of oncoming vehicles are hidden by obstacles (for example guard rails) the system may not deactivate the main beam.

Always fit Ford Original Parts when replacing headlamp bulbs. Other bulbs may reduce system performance.

CAUTIONS

Check and replace wiper blades regularly to ensure the camera sensor has a clear view through the windscreen. Replacement wiper blades must be the correct length.

Note: *Keep the windscreen free from obstructions such as bird droppings, insects and snow or ice.*

The system will automatically switch on main beam if it is dark enough and no other traffic is present. If it detects an approaching vehicle's headlamps or tail lamps, or street lighting ahead the system will switch off main beam before it can distract other road users. Dipped beams will remain on.

A camera sensor is centrally mounted behind the windscreen of the vehicle, and monitors conditions continuously to decide when to switch the main beam off and on.

Once the system is active the main beam will switch on if:

- It is dark enough to require the use of main beams and
- there is no traffic or street lighting ahead and
- vehicle speed is greater than 40 km/h (25 mph).

The main beam will switch off if:

- The ambient light is high enough that main beam is not required.
- An approaching vehicle's headlamps or tail lamps are detected.
- Street lighting is detected.
- Vehicle speed falls below 25 km/h (16 mph).
- The camera sensor is too hot or becomes blocked.

Activating the system

Switch on the system using the information display and autolamps. See **Information Displays** (page 79). See **Autolamps** (page 50).

E132707

Turn the switch to the autolamps position.

Note: *The system may take a short time to initialise after first switching the ignition on, especially in very dark conditions. The main beam will not automatically switch on during this period.*

Setting the system sensitivity

The system has three sensitivity levels which can be accessed via the information display. See **Information Displays** (page 79).

The sensitivity determines the speed at which the main beam will be restored after detected traffic leaves the field of view.

Manually overriding the system

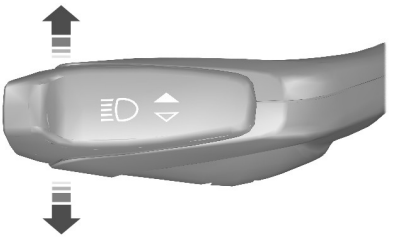

E133632

Push or pull the lever to switch between main and dipped beam.

Note: *This is a temporary override and the system will return to automatic operation after a short period.*

To permanently deactivate the system use the information display menu or turn the lighting control switch from autolamps to headlamps.

FRONT FOG LAMPS

WARNING

Only use the front fog lamps when visibility is considerably restricted by fog, snow or rain.

E132709

REAR FOG LAMPS

WARNINGS

Only use the rear fog lamps when visibility is restricted to less than 50 metres (164 feet).

Do not use the rear fog lamps when it is raining or snowing and visibility is more than 50 metres (164 feet).

E132710

ADJUSTING THE HEADLAMPS - VEHICLES WITH: ADAPTIVE FRONT LIGHTING/XENON HEADLAMPS

To adjust the headlamps for driving on the left or right hand side of the road, see your dealer.

HEADLAMP LEVELLING

Note: *Vehicles with Xenon headlamps are equipped with automatic headlamp levelling.*

1. Press to release the pop out button.

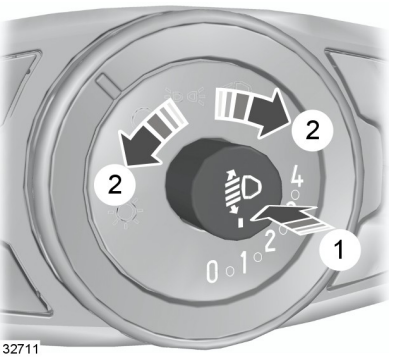

E132711

2. Rotate the button to the required setting.
3. Push the button to the closed position.

You can adjust the level of the headlamp beams according to the vehicle load.

Recommended headlamp levelling switch positions

Load		Load in luggage compartment	Switch position
Front seats	Second row seats		
1-2	-	-	0
2	3	-	1
2	3	Max[1]	2
1	-	Max[1]	3

[1] See **Vehicle identification** (page 237).

HAZARD WARNING FLASHERS

For item location: See **At a Glance** (page 11).

DIRECTION INDICATORS

E130141

Note: *Tap the lever up or down to make the direction indicators flash only three times.*

CORNERING LAMPS

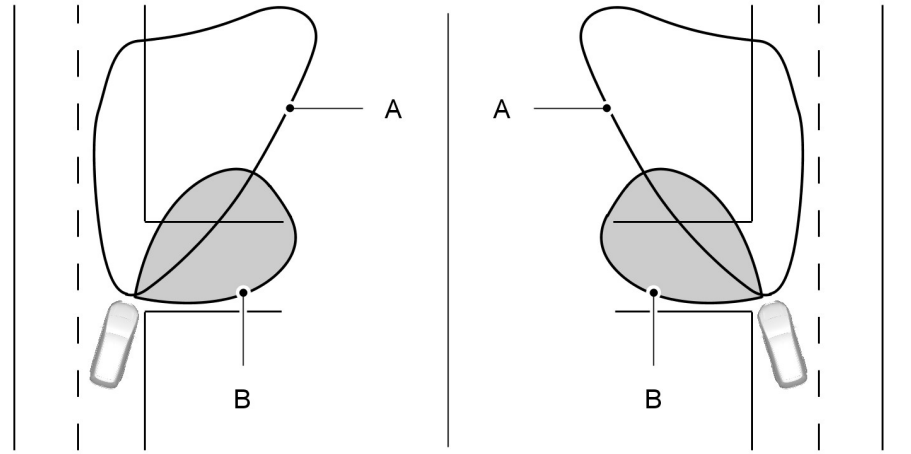

E72898

A Headlamp beam
B Cornering lamp beam

The cornering lamps illuminate the inside of a corner when you are turning.

INTERIOR LAMPS

Interior lighting

Note: *Individual lamps may be switched on independently, but not off if all lamps have been switched on by the driver.*

Note: *All other lamps will be either non-switchable or with individual reading or dome lamp functionality only.*

The lamps will come on when you unlock or open a door or the luggage compartment lid. If you leave a door open with the ignition switch off, all lamps will go off automatically after some time to prevent the vehicle battery from discharging. To switch them back on, switch on the ignition for a short time.

Side mounted lamp

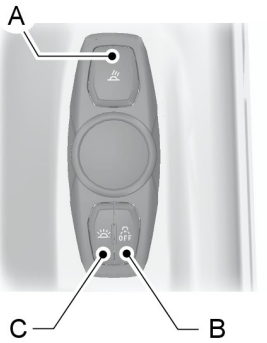

E139419

A Reading lamp on and off switch
B Door function switch
C All lamps on and off switch

If you press switch **B** all lamps remain off when the door is opened. Press the switch again to reverse.

You can control all lamps using switch **C**.

Centre mounted lamp

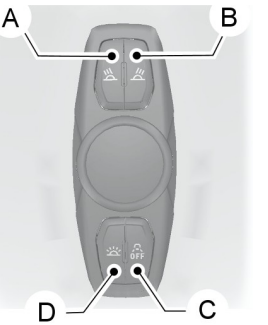

E139420

A Right-hand side reading lamp on and off switch
B Left-hand side reading lamp on and off switch
C Door function switch
D All lamps on and off switch

If you press switch **C** all lamps remain off when the door is opened. Press the switch again to reverse.

You can control all lamps using switch **D**.

Ambient lighting

If you leave a door open with the ignition switch off, the ambient lamp will go off automatically after some time to prevent the vehicle battery from discharging.

If dark, the ambient lights are active if the ignition and headlamps are switched on.

Type 1

Ambient lighting illuminates several areas, for example footwells, cup holders and doors with a single colour and can be switched on and off using the information display menu. See **General Information** (page 79).

Use the instrument lighting dimmer switches to adjust to the desired brightness. See **Instrument Lighting Dimmer** (page 118).

Type 2

E133092

Ambient lighting illuminates several areas, for example footwells, cup holders and doors with a choice of several colours. The ambient lighting control switch is located in the overhead console.

To activate, rotate the control knob and adjust to the desired brightness. Use the left switch to cycle through the colour choices. Use the right switch to activate all ambient light areas and interior lamps.

REMOVING A HEADLAMP

WARNING

Have Xenon bulbs changed by a trained technician. There is a risk of electric shock.

1. Open the bonnet. See **Opening and Closing the Bonnet** (page 201).

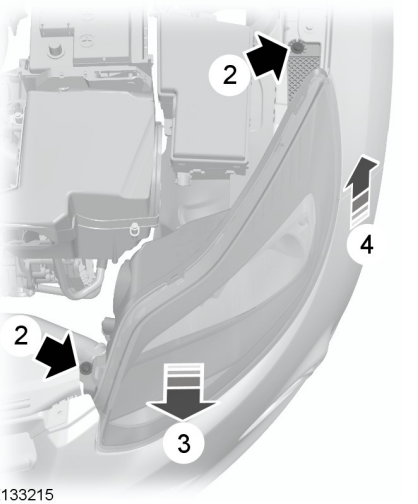

E133215

2. Remove the screws.
3. Pull the headlamp as far as possible towards the front of the vehicle to disengage it from the lower fixing point.
4. Lift the outer side of the headlamp and remove it.

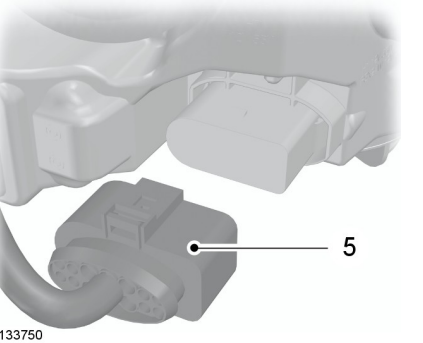

E133750

5. Disconnect the electrical connector.

Note: *When fitting the headlamp, make sure that you reconnect the electrical connector properly.*

Note: *When fitting the headlamp, make sure that you fully engage the headlamp in the lower fixing point.*

Note: *When fitting the headlamp, make sure that the screw is located in the headlamp moulding before you install it.*

CHANGING A BULB

WARNINGS

Switch the lights and the ignition off.

Let the bulb cool down before removing it.

Have Xenon bulbs changed by a properly trained technician. There is a risk of electric shock.

CAUTIONS

Do not touch the glass of the bulb.

Only fit bulbs of the correct specification. See **Bulb Specification Chart** (page 65).

Note: *The following instructions describe how to remove the bulbs. Fit replacements in the reverse order unless otherwise stated.*

Headlamp

Note: *Remove the covers to gain access to the bulbs.*

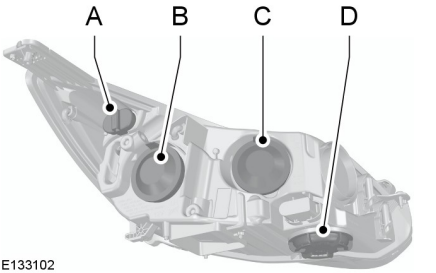

E133102

A	Side lamp
B	Headlamp dipped beam
C	Headlamp main beam
D	Direction indicator

Direction indicator

1. Remove the headlamp. See **Removing a Headlamp** (page 57).

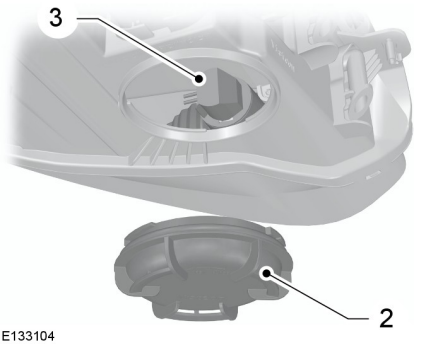

E133104

2. Remove the cover.
3. Turn the bulb holder anti-clockwise and remove it.
4. Gently press the bulb into the bulb holder, turn it anti-clockwise and remove it.

Headlamp main beam

CAUTION

Do not touch the glass of the bulb.

1. Remove the headlamp. See **Removing a Headlamp** (page 57).

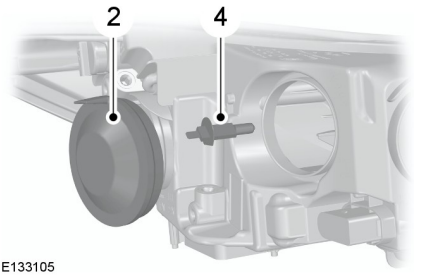

E133105

2. Remove the cover.
3. Disconnect the electrical connector.
4. Release the clip and remove the bulb.

Headlamp dipped beam

CAUTION

Do not touch the glass of the bulb.

1. Remove the headlamp. See **Removing a Headlamp** (page 57).

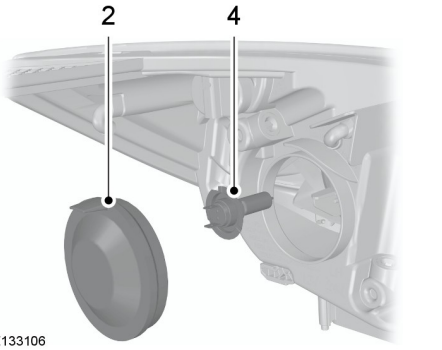

E133106

2. Remove the cover.
3. Disconnect the electrical connector.
4. Release the clip and remove the bulb.

Side Lamp

1. Remove the headlamp. See **Removing a Headlamp** (page 57).

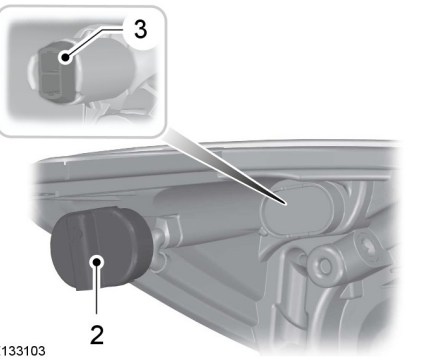

E133103

2. Remove the cover.
3. Remove the bulb holder.
4. Remove the bulb.

Side repeater

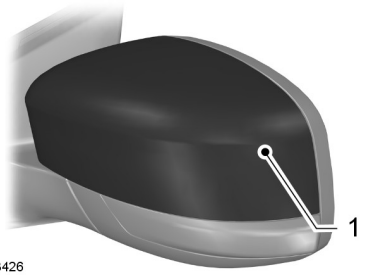

E133426

1. Carefully remove the cover.

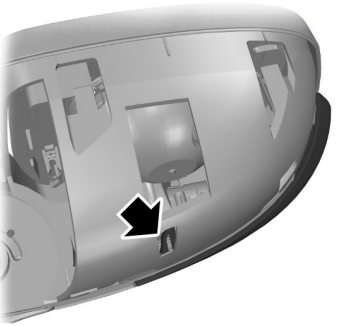

E133427

2. Using a suitable implement release the retaining clip.

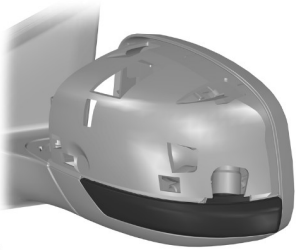

E133108

3. Carefully remove the side repeater.

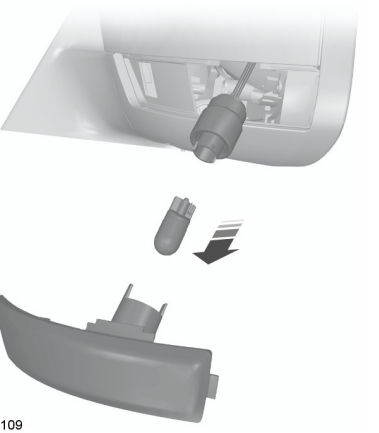

E133109

4. Remove the bulb holder.
5. Remove the bulb.

Approach lamp

CAUTION

When removing the mirror glass, take care not to break it.

Note: *Position the mirror glass as far inwards as possible.*

E133110

1. Insert your fingers into the gap between the mirror housing and the mirror glass and pull gently to remove the mirror glass.

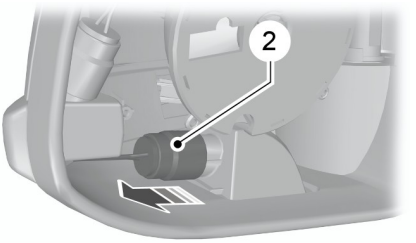

E133717

2. Remove the lamp.

E133718

3. Remove the bulb.

Front fog lamps

1. Remove the headlamp. See **Removing a Headlamp** (page 57).

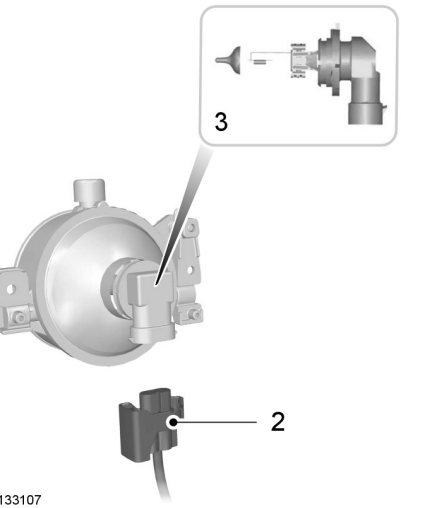

E133107

Note: *You cannot separate the fog lamp bulb from the bulb holder.*

2. Disconnect the electrical connector.
3. Turn the bulb holder anti-clockwise and remove it.

Rear lamps - 5 door

E133111

1. Remove the trim panel.

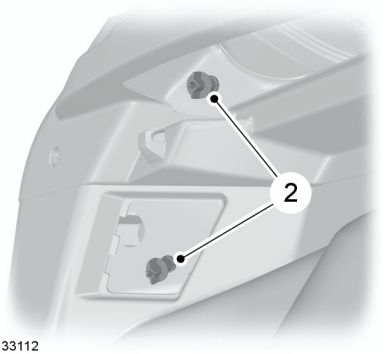

E133112

2. Remove the wing nuts and detach the clip.
3. Remove the lamp.

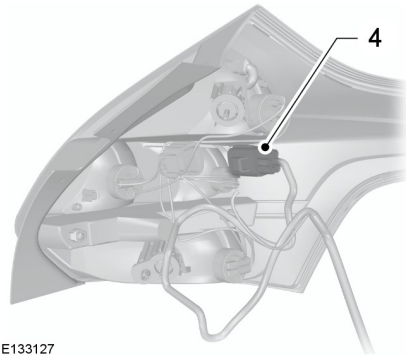

E133127

4. Disconnect the electrical connector.

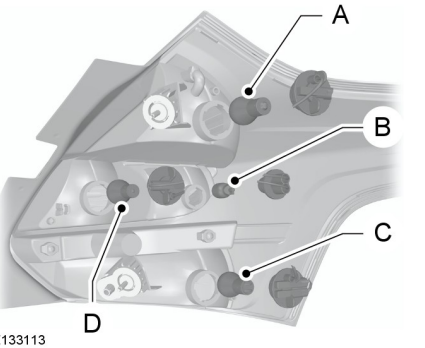

E133113

5. Remove the bulb holder.
6. Gently press the bulb into the bulb holder, turn it anti-clockwise and remove it.

A. Brake lamp
B. Reversing lamp
C. Tail and fog lamp
D. Direction indicator

Rear lamps - 4 door

Direction indicator, tail and fog lamp

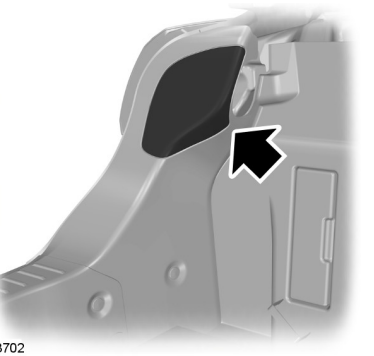

E133702

1. Remove the trim panel.

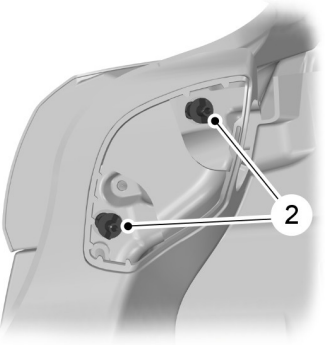

E133703

2. Remove the wing nuts and detach the clip.
3. Remove the lamp.

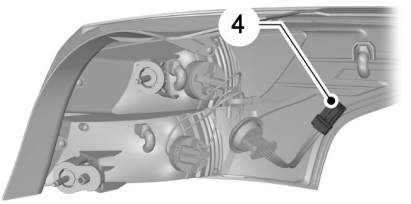

E133713

4. Disconnect the electrical connector.

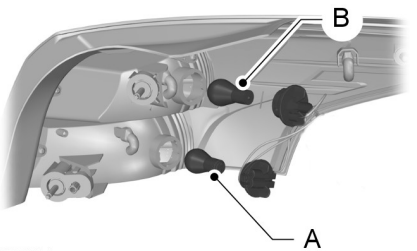

E133714

5. Remove the bulb holder.
6. Gently press the bulb into the bulb holder, turn it anti-clockwise and remove it.

A. Tail and fog lamp
B. Direction indicator

Brake and reversing lamp

1. Open the luggage compartment lid.

E133724

2. Remove the luggage compartment lid trim.

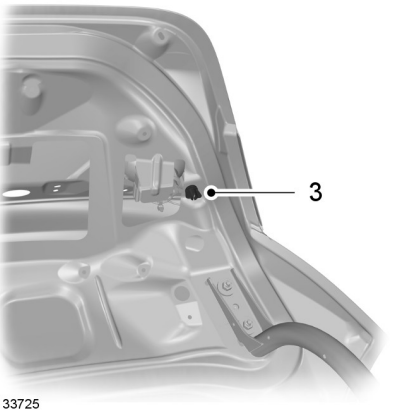

E133725

CAUTION

Unclip the outboard side first.

3. Remove the wing nut and detach the 2 clips.
4. Remove the lamp.

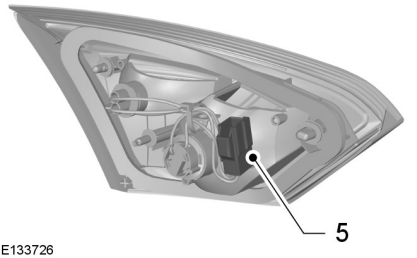

E133726

5. Disconnect the electrical connector.

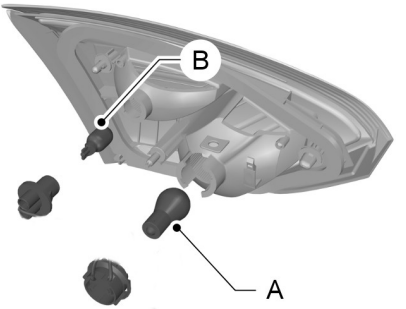

E133727

6. Remove the bulb holder.
7. Gently press the bulb into the bulb holder, turn it anti-clockwise and remove it.

A. Brake lamp
B. Reversing lamp

Central high mounted brake lamp

Note: *These are not serviceable items, please consult your dealer if they fail.*

Number plate lamp

Note: *These are not serviceable items, please consult your dealer if they fail.*

Interior lamps

Vehicles with LED lamps

Note: *The LED board is not a serviceable item, please consult your dealer if this fails.*

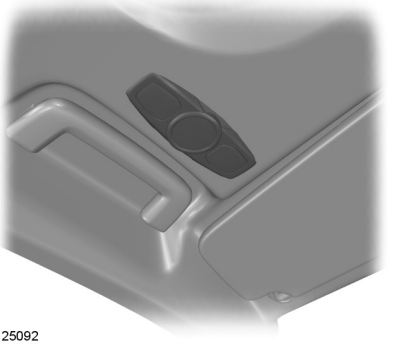

E125092

Luggage compartment lamp, footwell lamp and tailgate lamp

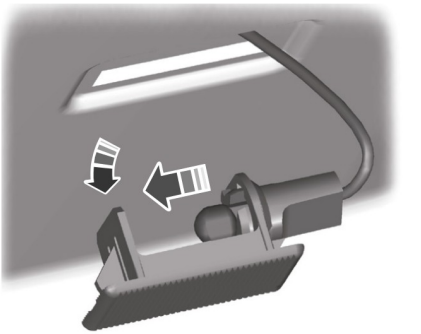

E72784

1. Carefully prise out the lamp.
2. Remove the bulb.

BULB SPECIFICATION CHART

Lamp	Specification	Power (watt)
Front direction indicator	PY21W	21
Headlamp main beam	H1	55
Headlamp dipped beam	H7	55[1]
Cornering lamp	H1	55
Front fog lamp	H11	55
Side lamp	W5W	5
Side repeater	WY5W	5
Approach lamp	W5W	5
Rear direction indicator	PY21W	21
Brake and tail lamp	P21/5W	21/5
Tail lamp	W5W	5
Rear fog lamp	P21W	21
Reversing lamp	W16W	16
Luggage compartment lamp	W5W	5

[1] Fit a replacement with the same rating as the one you have removed.

POWER WINDOWS

WARNING

Do not operate the electric windows unless they are free from obstruction.

Note: *If you operate the switches often during a short period of time, the system might become inoperable for a certain time to prevent damage due to overheating.*

Switch on the ignition to operate the electric windows.

Global opening and closing

You can also operate the electric windows with the ignition off via the global opening and closing function. See **Locks** (page 33).

Driver's door switches

You can operate all the windows with the switches on the door trim panel of the driver's door.

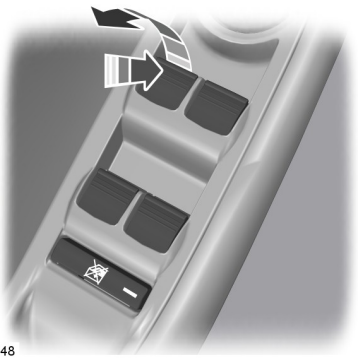

E70848

Opening and closing the windows automatically

Press or lift the switch to the second action point and release it completely. Press or lift it again to stop the windows.

Safety switch for rear windows

WARNING

On some vehicles, pressing the switch will also lock the rear doors from inside. See **Child Safety Locks** (page 23).

Note: *You can always operate the rear windows from the driver's door.*

E70850

A switch in the driver's door disables the rear electric window switches.

The light in the switch comes on and the lights in the rear window switches go off when the rear windows are disabled.

Anti-trap function

WARNING

Careless closing of the windows can override the protection function and cause injuries.

The electric windows will stop automatically while closing and reverse some distance if there is an obstacle in the way.

Overriding the anti-trap function

WARNING

While you close the window for the third time, the anti-trap function is disabled. Make sure there are no obstacles in the way of the closing window.

To override this protection function when there is a resistance, e.g. in the winter, proceed as follows:

1. Close the window twice until it reaches the resistance and let it reverse.
2. Close the window a third time to the resistance. The anti-trap function is disabled and you cannot close the window automatically. The window will override the resistance and you can close it fully.
3. If the window does not close after the third attempt, have it checked by an expert.

Resetting the memory of the electric windows

WARNING

The anti-trap function is deactivated until you have reset the memory.

After the battery has been disconnected from the vehicle you must reset the memory separately for each window:

Note: *On vehicles with a convertible top, the roof and doors must be fully closed before carrying out the following procedure.*

1. Lift and hold the switch until the window is fully closed.
2. Release the switch.
3. Lift the switch again for one more second.
4. Push and hold the switch until the window is fully open.
5. Release the switch.
6. Lift and hold the switch until the window is fully closed.
7. Open the window and try to close it automatically.
8. Reset and repeat procedure if the window does not close automatically.

EXTERIOR MIRRORS

WARNING

Do not overestimate the distance of the objects that you see in the convex mirror. Objects seen in convex mirrors will appear smaller and further away than they actually are.

Manual folding mirrors

Folding

Push the mirror towards the door window glass.

Unfolding

Make sure that you fully engage the mirror in its support when returning it to its original position.

ELECTRIC EXTERIOR MIRRORS

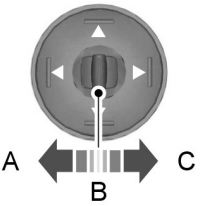

E70846

A Left-hand mirror
B Off
C Right-hand mirror

Mirror tilting positions

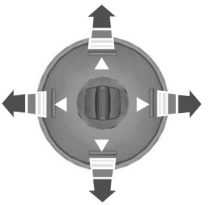

E70847

The electric exterior mirrors are fitted with a heating element that will defrost or demist the mirror glass. See **Heated Windows and Mirrors** (page 105).

Electric folding mirrors

Automatic folding and unfolding

Note: *If the mirrors have been folded using the manual fold button they can only be unfolded using the manual fold button.*

The mirrors will fold automatically when you lock the vehicle with the key, the remote control or a keyless entry system request. The mirrors will unfold when you unlock the vehicle with the key, the remote control, a keyless entry system request, the driver's interior door handle or starting the engine.

Manual folding and unfolding

The electric folding mirrors operate with the ignition on.

Note: *You can operate the mirrors (mirror tilting and folding) for several minutes after you switch off the ignition. They will be deactivated as soon as a door is opened.*

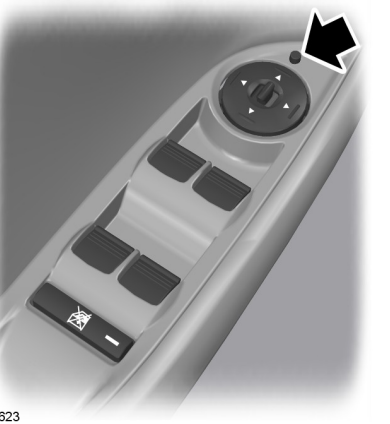

E72623

Press the button to fold or unfold the mirrors.

If you press the switch again while the mirrors are moving, they will stop and reverse the direction of movement.

Note: *When the mirrors are operated often during a short period of time, the system may become inoperable for a period of time to prevent damage due to overheating.*

AUTO-DIMMING MIRROR

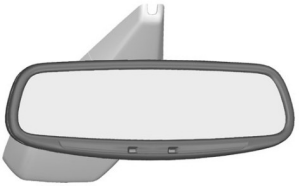

E71028

The auto-dimming mirror will adjust automatically when hit by glaring light from behind. It will not work when you have selected reverse gear.

BLIND SPOT MONITOR

Blind spot information system (BLIS)

WARNINGS

The system is not designed to prevent contact with other vehicles or objects. The system only provides a warning to assist you in detecting vehicles in the blind spot zones. The system will not detect obstacles, pedestrians, motorcyclists or cyclists.

Do not use the system as a replacement for using the side and rear view mirrors, and looking over your shoulder before changing lanes. The system is not a replacement for careful driving and is only to be used as an aid.

The system is a convenience feature that aids the driver in detecting vehicles that may have entered the blind spot zone (**A**). The detection area is on both sides of the vehicle extending rearwards from the exterior mirrors to approximately 3 metres (10 feet) beyond the bumper. The system will alert you if certain vehicles enter the blind spot zone whilst driving.

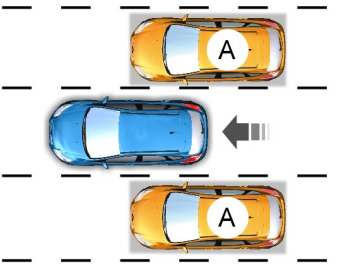

E124788

Using the system

The system displays a yellow indicator located in the exterior mirrors.

E124736

Note: *Both indicators will illuminate briefly when you switch the ignition on to confirm that the system is operational.*

Note: *On vehicles with automatic transmission, the system is active only in* ***S, D*** *and* ***N****.*

The system is only active when you exceed 10 km/h (6 mph). The system is temporarily deactivated when you select reverse gear.

System detection and alerts

The system will trigger the alert for vehicles that enter the blind spot zone from the rear or merge from the side. Vehicles that you pass, or vehicles that enter the blind spot zone from the front, will only trigger the alert after the vehicle has remained in the blind spot zone for a short period of time.

Note: *Vehicles that pass through the blind zone quickly (typically less than 2 seconds) will not trigger the alert.*

The system consists of two radar sensors each located behind the rear wheels hidden behind the bumpers.

CAUTIONS

Do not place items such as bumper stickers in this area.

Repairs to these areas using body filler will affect the performance of the system.

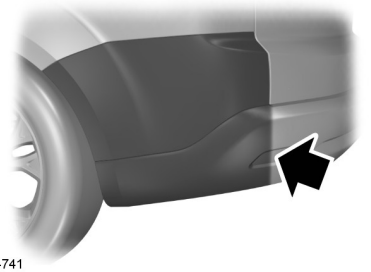

E124741

Detection limitations

There may be certain instances where vehicles entering and exiting the blind spot zones may not be detected.

Instances which may cause non-detection:

- Debris build up on the rear bumper panels in the area of the sensors.
- Certain manoeuvring of vehicles entering and exiting the blind zone.
- Vehicles passing through the blind zone at high speed.
- Severe weather conditions.
- Several vehicles passing through the blind zone following each other closely.

False alerts

Note: *False alerts are temporary and will self correct.*

There may be certain instances when the system will alert with no vehicle present in the blind zone.

Circumstances where false alerts may occur:

- Road guardrails.
- Motorway concrete walls.
- Construction areas.
- Sharp turns around a building.
- Bushes and trees.
- Cyclists and motorcyclists.
- Coming to a stop with a vehicle directly behind but very close.

Turning the system on and off

Note: *The on or off position will remain until manually changed.*

You can turn the system on and off using the information display. See **Information Displays** (page 79).

When you turn the system off no further alerts will be received. The BLIS warning indicator will illuminate. See **Warning Lamps and Indicators** (page 74).

Detection errors

Note: *The alert indicator in the mirror will not illuminate.*

If the system senses a fault on either sensor, the system warning symbol will illuminate and remain on. The information display will confirm the fault and indicate whether the left or right side is affected.

Blocked sensor

WARNING

Prior to the system recognizing a blocked condition and issuing a warning, the number of missed objects will increase.

CAUTION

The sensors may not detect vehicles in heavy rain or other conditions that cause disruptive reflections.

Note: *Keep the rear bumper area surrounding the sensors free from dirt, ice and snow.*

If a sensor becomes blocked the system performance may degrade. A blocked sensor message may be displayed.

The system will automatically return to normal operation once two other vehicles have been detected on both sides.

Trailer towing false alerts

CAUTION

Vehicles fitted with a trailer tow module not approved by us may not correctly be detected. Switch the system off to avoid false alerts. See **Information Displays** (page 79).

If the vehicle is fitted with a trailer tow module approved by us, the system will detect a connected trailer and deactivate. A confirmation message will be shown in the information display. See **Information Messages** (page 87). The BLIS warning indicator will illuminate. See **Warning Lamps and Indicators** (page 74).

GAUGES

Type 1

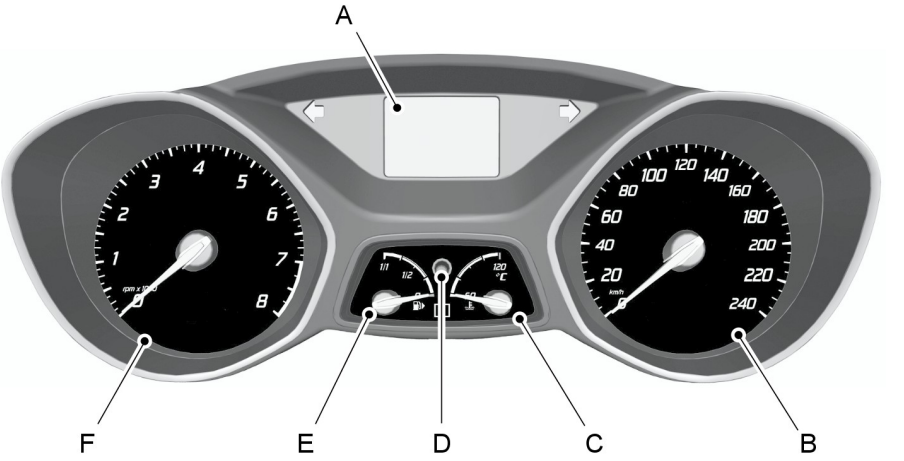

E132065

A Information display. See **Information Displays** (page 79).
B Speedometer
C Engine coolant temperature gauge
D Tripmeter reset button
E Fuel gauge
F Tachometer

Type 2 and 3

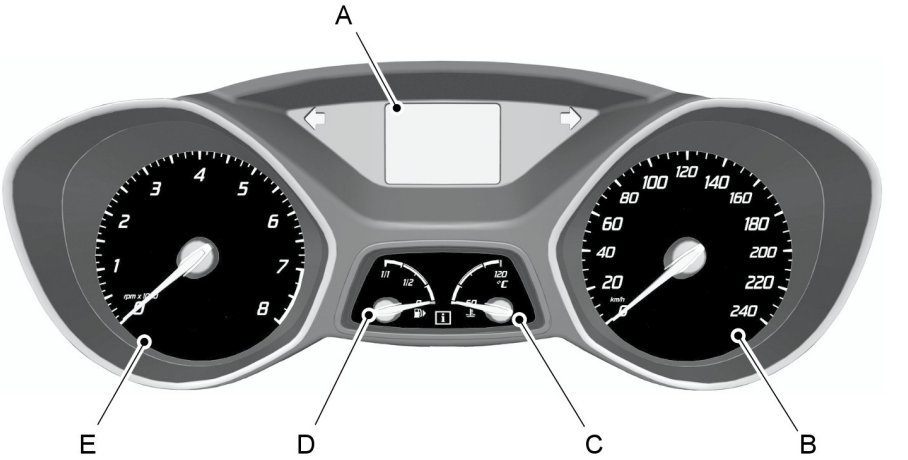

E130149

A Information display. See **Information Displays** (page 79).
B Speedometer
C Engine coolant temperature gauge
D Fuel gauge
E Tachometer

2.0L EcoBoost - MI4

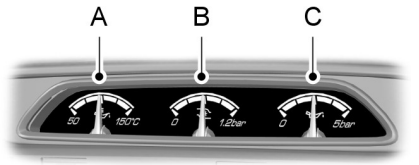

E141657

A Oil temperature gauge
B Turbocharger boost gauge
C Oil pressure gauge

Engine coolant temperature gauge

All vehicles

Shows the temperature of the engine coolant. At normal operating temperature, the needle will remain in the centre section.

WARNING

Do not restart the engine until the cause of overheating has been resolved.

If the needle enters the red section, the engine is overheating. Stop the engine, switch the ignition off and determine the cause **once the engine has cooled down**. See **Engine Coolant Check** (page 213).

Oil temperature gauge

Indicates the temperature of the engine oil.

At normal operating temperature, the needle remains within the normal area.

If it enters the red section, the engine is overheating. Reduce engine speed as soon as safely possible to allow the engine to cool. If the engine is continued to be driven at high engine speeds with the needle in the red section, the engine speed will be reduced automatically to prevent engine damage.

Turbocharger boost gauge

Indicates the added intake pressure provided by the turbocharger.

Oil pressure gauge

WARNING

Driving with your oil pressure gauge pointer continuously in the red section of the scale may damage the engine.

Note: *When the engine is cold, oil pressure close to 5 bar may be indicated. This is normal. As the engine warms up, the oil pressure will drop.*

This gauge indicates engine oil pressure up to a recommended safe maximum of 5 bar.

During normal driving the indicated oil pressure will vary with engine speed, the pressure rising as engine speed rises and dropping as engine speed drops.

If the engine oil pressure drops below the normal range, the oil pressure gauge pointer will drop into the red section of the gauge scale and the engine oil pressure warning lamp in the main instrument cluster will illuminate. Stop the vehicle as soon as safely possible and switch off the engine immediately. Check the oil level and add oil if needed. See **Engine Oil Check** (page 212).

Fuel gauge

The arrow adjacent to the fuel pump symbol indicates on which side of the vehicle the fuel filler cap is located.

WARNING LAMPS AND INDICATORS

The following warning lamps and indicators illuminate when the ignition is switched on:

- Airbag
- ABS
- Stability control (ESP)
- Low fuel
- Brake system
- Frost
- ESP off

If a warning or indicator lamp does not illuminate when the ignition is switched on, it indicates a malfunction. Have the system checked by properly trained technician.

ABS warning lamp

If it illuminates when you are driving, this indicates a malfunction. You will continue to have normal braking (without ABS). Have the system checked by a properly trained technician as soon as possible.

Airbag warning lamp

If it illuminates when you are driving, this indicates a malfunction. Have the system checked by a properly trained technician.

Blind spot monitor indicator

It will illuminate when this feature is deactivated or in conjunction with a message. See **Blind Spot Monitor** (page 69). See **Information Messages** (page 87).

Brake system lamp

It illuminates when the parking brake is engaged.

WARNING

Reduce your speed gradually and stop your vehicle as soon as it is safe to do so. Use your brakes with care.

If it illuminates when you are driving, check that the parking brake is not engaged. If the parking brake is not engaged, this indicates a malfunction. Have the system checked by a properly trained technician immediately.

Cruise control indicator

It will illuminate when you have set a speed using the cruise control system. See **Using Cruise Control** (page 155).

Direction indicators

Flashes during operation. A sudden increase in the rate of flashing warns of a failed indicator bulb. See **Changing a Bulb** (page 58).

Engine warning lamp

If it illuminates with the engine running, this indicates a malfunction. If it flashes when you are driving, **reduce the speed of your vehicle immediately**. If it continues to flash, avoid heavy acceleration or deceleration. Have the system checked by a properly trained technician immediately.

CAUTION

If the engine warning lamp illuminates in conjunction with a message, have the system checked as soon as possible.

Forward alert warning indicator

It will illuminate when this feature is switched off or in conjunction with a message. See **Forward alert function** (page 161).

Front fog lamp indicator

It will illuminate when you switch the front fog lamps on.

Frost warning lamp

WARNING

Even if the temperature rises to above +4°C (39°F) there is no guarantee that the road is free of hazards caused by inclement weather.

It will illuminate and glow amber when the outside air temperature is between +4°C (39°F) and 0°C (32°F). It will glow red when the temperature is below 0°C (32°F).

Glow plug indicator

See **Starting a Diesel Engine** (page 124).

Headlamp indicator

It will illuminate when you switch the headlamp dipped beam or the side and tail lamps on.

Ignition warning lamp

If it illuminates when you are driving, this indicates a malfunction. Switch off all unnecessary electrical equipment. Have the system checked by a properly trained technician immediately.

Lane departure warning indicator

It will illuminate when this feature is switched off or in conjunction with a message. See **Lane Departure Warning** (page 165).

Low fuel level warning lamp

If it illuminates, refuel as soon as possible.

Low tyre pressure warning lamp

See **Tyre Pressure Monitoring System** (page 231).

Main beam indicator

It will illuminate when you switch the headlamp main beam on. It will flash when you use the headlamp flasher.

Message indicator

It will illuminate when a new message is stored in the information display. See **Information Messages** (page 87).

Oil pressure warning lamp

CAUTION

Do not resume your journey if it illuminates despite the level being correct. Have the system checked by a properly trained technician immediately.

If it stays on after starting or illuminates when driving, this indicates a malfunction. Stop your vehicle as soon as it is safe to do so and switch the engine off. Check the engine oil level. See **Engine Oil Check** (page 212).

Rear fog lamp indicator

It will illuminate when you switch the rear fog lamps on.

Seat belt reminder

See **Seat belt reminder** (page 27).

Shift indicator

It will illuminate to inform you that shifting to a higher gear may give better fuel economy and lower CO2 emissions. It will not illuminate during periods of high acceleration, braking or when the clutch pedal is pressed.

Stability control (ESP) indicator

While driving, it flashes during activation of the system. After switching on the ignition, if it does not illuminate or illuminates continuously while driving, this indicates a malfunction. During a malfunction, the system switches off. Have the system checked by a properly trained technician as soon as possible.

If you switch traction control off, the warning lamp will illuminate. The lamp will go out when you switch the system back on or when you switch the ignition off.

Start-stop indicator

It will illuminate to inform you when the engine shuts down or in conjunction with a message. See **Using start-stop** (page 128). See **Information Messages** (page 87).

AUDIBLE WARNINGS AND INDICATORS

Switching the chimes on and off

You can deactivate certain chimes in the Information display using the steering wheel control. For item location: See **At a Glance** (page 11).

To set which chimes should sound:

1. Press the left arrow button on the steering wheel to enter the main menu.
2. Highlight **Settings** with the up and down arrow buttons and press the right arrow button.
3. Highlight **Chimes** and press the right arrow button.
4. Highlight **Information** or **Warning** and press the **OK** button to switch the chime on and off.
5. Press the left arrow button to exit the menu. Press and hold the left arrow button to return to the main menu display.

Automatic transmission

If position **P** is not selected, a warning chime will sound when the driver's door is opened.

Frost

WARNING

Even if the temperature rises to above +4°C (39°F) there is no guarantee that the road is free of hazards caused by inclement weather.

A warning chime will sound in the following conditions:

- +4°C (39°F) or lower: frost warning.
- 0°C (32°F) or lower: danger of icy roads.

Key outside car

Vehicles with keyless entry

If the engine is running and a passive key is no longer detected within the vehicle interior, a warning chime will sound.

Door open

A warning chime will sound when any door is opened if the vehicle exceeds a relatively low speed.

Lights on

A warning chime will sound if the driver's door is opened with the exterior lights switched on and the ignition switched off.

Low fuel

A warning chime will sound when the remaining fuel is less than approximately 6 litres (1.3 gallons).

Seat belt reminder

See **Seat belt reminder** (page 27).

GENERAL INFORMATION

Note: *The information display will remain on for several minutes after you switch off the ignition.*

Various systems on your vehicle can be controlled using the information display controls on the steering column. Corresponding information is displayed in the information display.

For detailed instructions on navigation, refer to the appropriate manual.

Device list

The icon changes to show the current function in use.

CD

Radio

Auxiliary input

Phone

Settings

Controls

Press the **up** and **down** arrow buttons to scroll through and highlight the options within a menu.

Press the **right** arrow button to enter a sub-menu.

Press the **left** arrow button to exit a menu.

Hold the **left** arrow button pressed at any time to return to the main menu display (escape button).

Press the **OK** button to choose and confirm a setting.

Menu structure - information display

All vehicles

You can access the menu using the Information display control. For item location: See **At a Glance** (page 11).

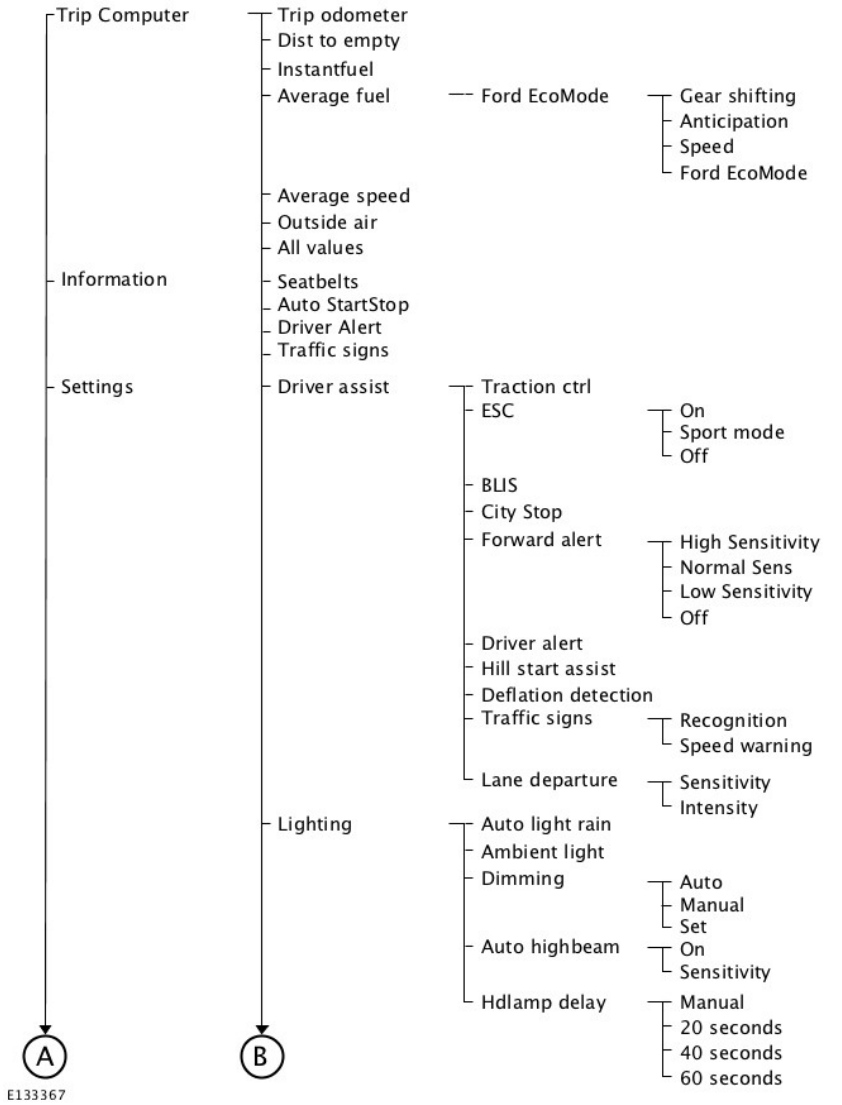
Trip Computer
Trip odometer
Dist to empty
Instantfuel
Average fuel
Ford EcoMode
Gear shifting
Anticipation
Speed
Ford EcoMode
Average speed
Outside air
All values
Information
Seatbelts
Auto StartStop
Driver Alert
Traffic signs
Settings
Driver assist
Traction ctrl
ESC
On
Sport mode
Off
BLIS
City Stop
Forward alert
High Sensitivity
Normal Sens
Low Sensitivity
Off
Driver alert
Hill start assist
Deflation detection
Traffic signs
Recognition
Speed warning
Lane departure
Sensitivity
Intensity
Lighting
Auto light rain
Ambient light
Dimming
Auto
Manual
Set
Auto highbeam
On
Sensitivity
Hdlamp delay
Manual
20 seconds
40 seconds
60 seconds
A
B
E133367

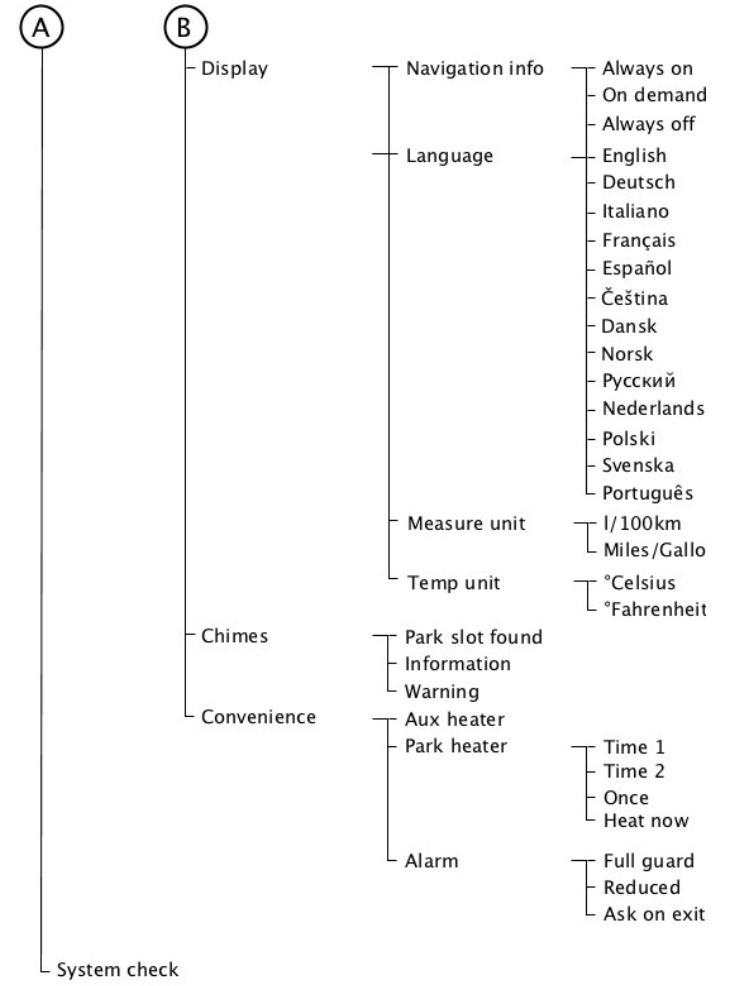
A
B
Display
Navigation info
Always on
On demand
Always off
Language
English
Deutsch
Italiano
Français
Español
Čeština
Dansk
Norsk
Русский
Nederlands
Polski
Svenska
Português
Measure unit
l/100km
Miles/Gallo
Temp unit
°Celsius
°Fahrenheit
Chimes
Park slot found
Information
Warning
Convenience
Aux heater
Park heater
Time 1
Time 2
Once
Heat now
Alarm
Full guard
Reduced
Ask on exit
System check
E133368

Menu structure - information and entertainment display

You can access the menu using the buttons on the audio or navigation unit.

All vehicles

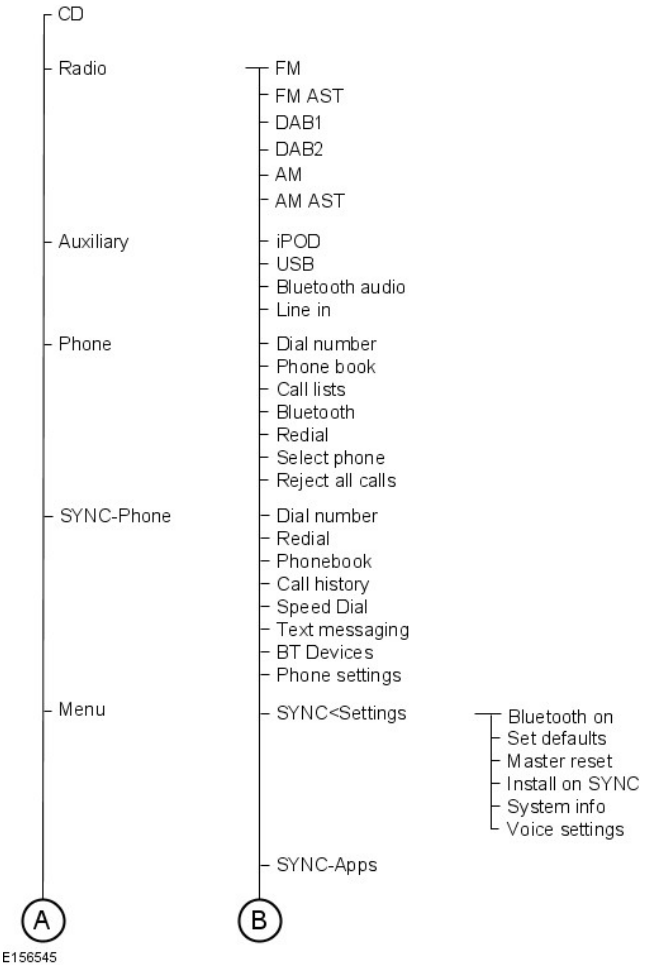

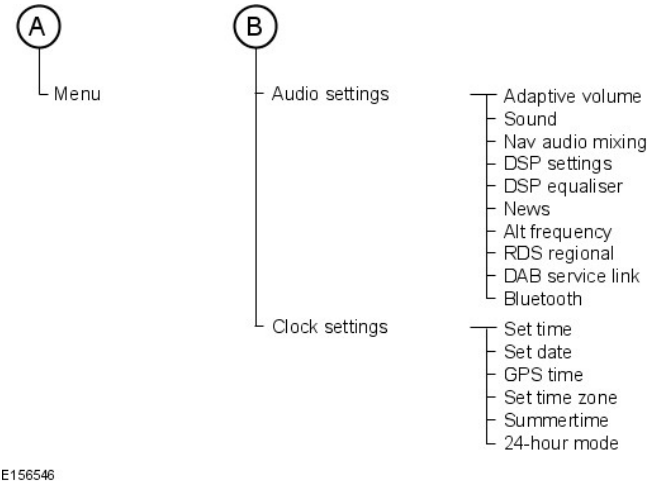

Menu structure - information and entertainment display

You can access the menu using the Information and entertainment display control. For item location: See **At a Glance** (page 11).

Vehicles with navigation system

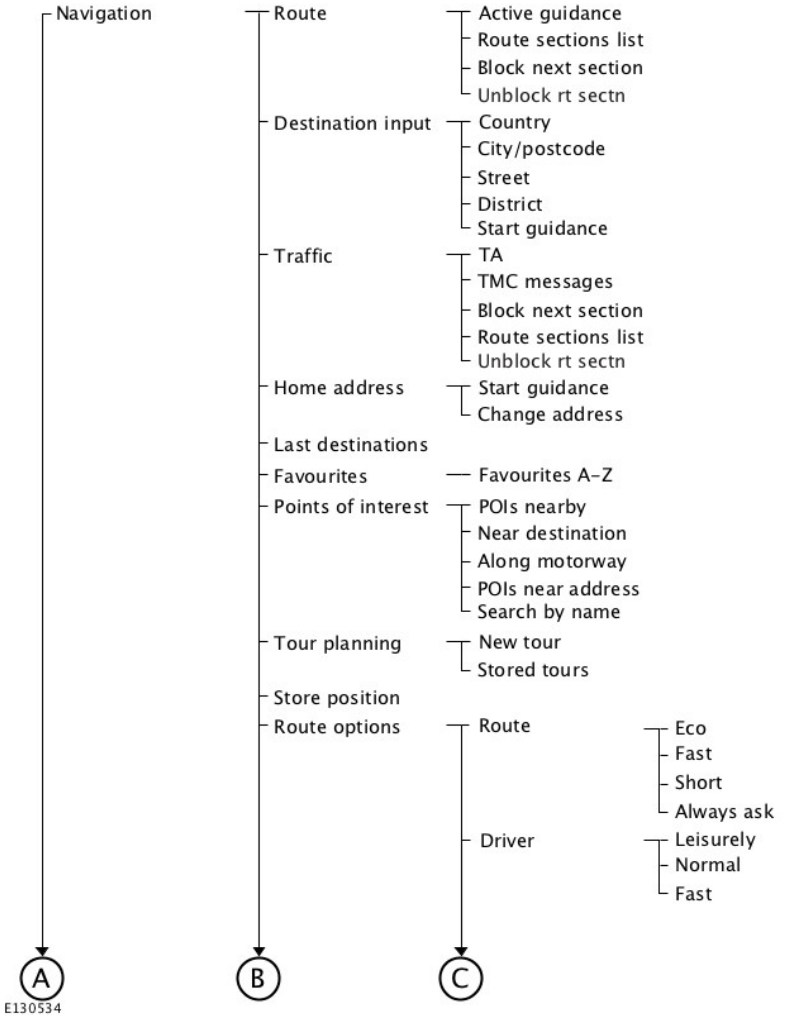

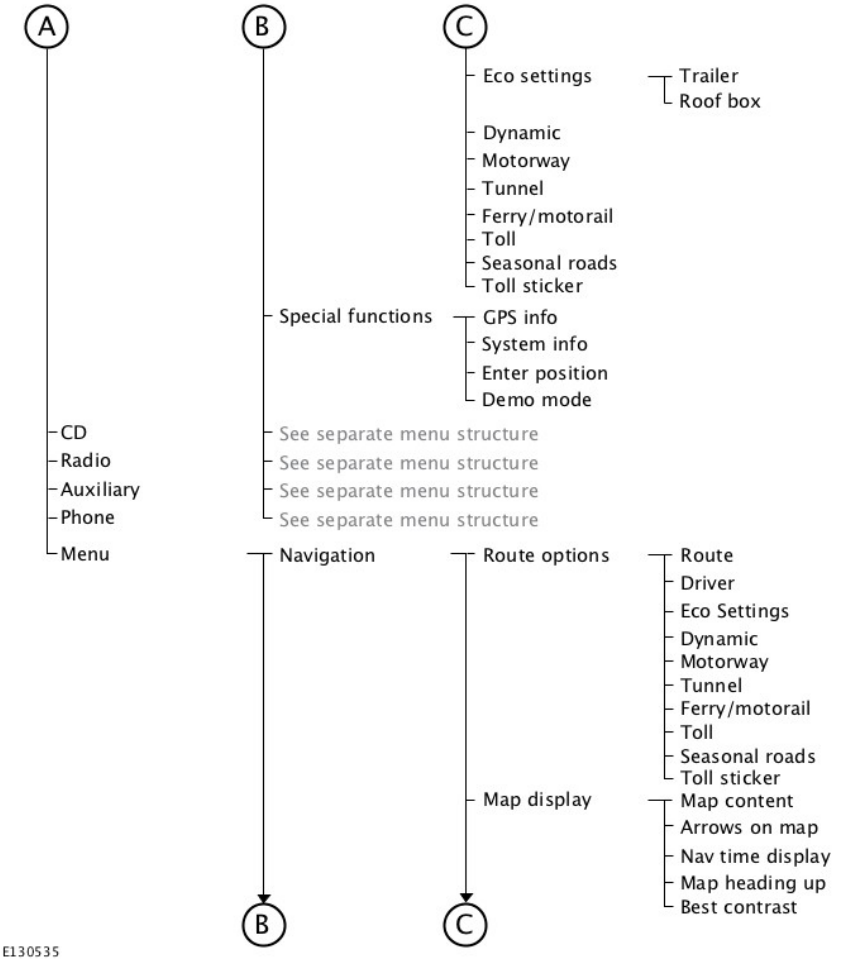
A
B
C
Eco settings
Trailer
Roof box
Dynamic
Motorway
Tunnel
Ferry/motorail
Toll
Seasonal roads
Toll sticker
Special functions
GPS info
System info
Enter position
Demo mode
CD
Radio
Auxiliary
Phone
Menu
See separate menu structure
See separate menu structure
See separate menu structure
See separate menu structure
Navigation
Route options
Route
Driver
Eco Settings
Dynamic
Motorway
Tunnel
Ferry/motorail
Toll
Seasonal roads
Toll sticker
Map display
Map content
Arrows on map
Nav time display
Map heading up
Best contrast
B
C
E130535

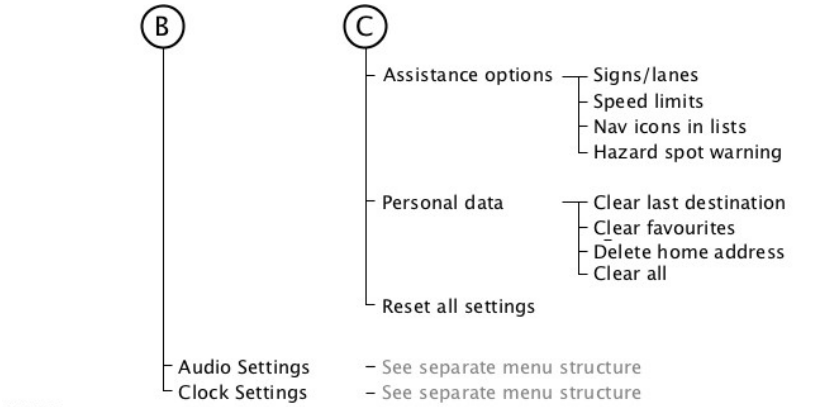

TRIP COMPUTER

Trip Odometer

Registers the mileage of individual journeys.

Distance to empty

Indicates the approximate distance the vehicle will travel on the fuel remaining in the tank. Changes in driving pattern may cause the value to vary.

Instantaneous fuel consumption

Indicates the current average fuel consumption.

Average fuel consumption

Indicates the average fuel consumption since the function was last reset.

Average speed

Indicates the average speed calculated since the function was last reset.

Outside air temperature

Shows the outside air temperature.

Odometer

Registers the total mileage of the vehicle.

Resetting the trip computer

To reset a particular display:

1. Highlight **Trip Computer** with the up and down arrow buttons and press the right arrow button.
2. Highlight the function to be reset.
3. Hold the **OK** button pressed.

PERSONALISED SETTINGS

Language setting

A choice of 13 languages are available:

English, German, Italian, French, Spanish, Russian, Dutch, Polish, Swedish, Portuguese, Czech, Danish and Norwegian.

Measure units

To toggle between metric and imperial units, scroll to this display and press the **OK** button.

Toggling the units of measure using this display will affect the following displays:

- Distance to empty.
- Average fuel consumption.
- Instantaneous fuel consumption.
- Average speed.

Temperature units

To toggle between metric and imperial units, scroll to this display and press the **OK** button.

Toggling the temperature units using this display will affect the following displays:

- Outside air temperature.
- The temperature display in the automatic climate control.

Chime deactivation

The following chimes can be deactivated:

- Warning messages.
- Information messages.

INFORMATION MESSAGES

Note: *Certain messages may be abbreviated or shortened depending upon which cluster type you have.*

E130248

Press the **OK** button to acknowledge and remove some messages from the information display. Other messages will be removed automatically after a short time.

Certain messages need to be confirmed before you can access the menus.

Message indicator

The message indicator illuminates to supplement some messages. It will be red or amber depending on the severity of the message and will remain on until the cause of the message has been rectified.

Some messages will be supplemented by a system specific symbol with a message indicator.

Active City Stop

Message	Indicator	Action
Active City Stop Sensor blocked Clean screen	amber	See **Using Active City Stop** (page 171).
Active City Stop not available	amber	See **Using Active City Stop** (page 171).
Active City Stop Auto braking	-	See **Using Active City Stop** (page 171).

Airbag

Message	Message indicator	Action
Airbag malfunction service now	amber	Have the system checked by a properly trained technician as soon as possible.

Alarm

Message	Message indicator	Action
Alarm triggered check vehicle	amber	See **Alarm** (page 41).
Alarm malfunction service required	-	Have the system checked by a properly trained technician.

Automatic main beam control

Message	Indicator	Action
Front camera low visibility Clean screen	amber	The front camera sensor has reduced visibility. Clean the windscreen.
Front camera malfunction Service required	amber	The front camera sensor has malfunctioned. Have this checked as soon as possible.

Battery and charging system

Message	Message indicator	Action
Electrical system over voltage stop safely	red	Stop your vehicle as soon as it is safe to do so and switch off the ignition. Have the system checked by a properly trained technician as soon as possible.
Battery low check handbook	amber	Have the system checked by a properly trained technician as soon as possible.

Blind spot monitor

Message	Message indicator	Action
BLIS low visibility check handbook	amber	See **Blind Spot Monitor** (page 69).
BLIS: right sensor fault service required	amber	Have the system checked by a properly trained technician as soon as possible.
BLIS: left sensor fault service required	amber	Have the system checked by a properly trained technician as soon as possible.
BLIS not available trailer attached	amber	See **Blind Spot Monitor** (page 69).

Child power lock

Message	Message indicator	Action
Child lock malfunction service required	amber	Have the system checked by a properly trained technician as soon as possible.

Climate control

Message	Indicator	Action
Auxiliary Heater on	amber	See **Auxiliary Heater** (page 107).
Auxiliary Heater off	-	See **Auxiliary Heater** (page 107).

Cruise control and Adaptive cruise control (ACC)

Message	Indicator	Action
Front radar sensor blocked check handbook	amber	See **Adaptive cruise control (ACC)** (page 157).
Forward Alert not available	amber	See **Adaptive cruise control (ACC)** (page 157).
ACC not available	amber	See **Adaptive cruise control (ACC)** (page 157).

Doors open

Message	Message indicator	Action
Driver door open	red	Stop the vehicle as soon as safely possible and close.
Driver side rear door open	red	Stop the vehicle as soon as safely possible and close.
Passenger door open	red	Stop the vehicle as soon as safely possible and close.
Passenger side rear door open	red	Stop the vehicle as soon as safely possible and close.
Luggage compartment lid open	red	Stop the vehicle as soon as safely possible and close.
Bonnet open	red	Stop the vehicle as soon as safely possible and close. See **Opening and Closing the Bonnet** (page 201).

Driver alert

Message	Indicator	Action
Driver fatigue warning Rest now	red	Stop and rest as soon as it is safe to do so.
Driver fatigue warning Rest suggested	amber	Take a rest break soon.

Engine immobiliser

Message	Message indicator	Action
Immobiliser active check handbook	amber	Your key has not been recognised. Remove the key and try again.
Immobiliser malfunction service required	amber	Have the system checked by a properly trained technician as soon as possible.

Hill start assist

Message	Message indicator	Action
Hill start assist not available	amber	Have the system checked by a properly trained technician.

Keyless entry

Message	Message indicator	Action
Ford KeyFree key not inside car	red	See **Keyless Entry** (page 35).
Ford KeyFree key inside vehicle	amber	See **Keyless Entry** (page 35).
Ford KeyFree Place key in key holder	-	See **Keyless Entry** (page 35).
Ford KeyFree no key detected	-	See **Keyless Entry** (page 35).
Key battery low replace soon	-	See **Changing the remote control battery** (page 30).
Steering lock engaged turn steering wheel	-	See **Steering Wheel Lock** (page 122).

Lane keeping aid

Message	Indicator	Action
Lane keeping aid malfunction Service required	amber	Have the system checked by a properly trained technician as soon as possible.

Lighting

Message	Message indicator	Action
Headlamp malfunction service required	amber	Have the system checked by a properly trained technician as soon as possible.
Brake lamp bulb fault	-	One or both of the brake lamp bulbs have blown. Check the brake lamp bulbs. See **Changing a Bulb** (page 58).
Park lamp bulb fault	-	One or both of the side or tail lamp bulbs have blown. Check the side and tail lamp bulbs. See **Changing a Bulb** (page 58).
Rear fog lamp bulb fault	-	One or both of the rear fog lamp bulbs have blown. Check the rear fog lamp bulbs. See **Changing a Bulb** (page 58).
Dipped beam bulb fault	-	One or both of the headlamp dipped beam bulbs have blown. Check the headlamp dipped beam bulbs. See **Changing a Bulb** (page 58).
Trailer brake lamp bulb fault	-	One or both of the brake lamp bulbs on your trailer have blown. Check the brake lamp bulbs on your trailer.
Trailer turn lamp bulb fault	-	One or both of the direction indicator bulbs on your trailer have blown. Check the direction indicator bulbs on your trailer.

Maintenance

Message	Message indicator	Action
High engine temperature stop safely	red	Stop your vehicle as soon as it is safe to do so and switch off the ignition. Have the system checked by a properly trained technician as soon as possible.
Brake fluid level low service now	red	Check the brake fluid level. See **Brake and Clutch Fluid Check** (page 214).
Engine malfunction service now	red	Stop the vehicle as soon as safely possible and switch off the engine immediately. Have the system checked by a properly trained technician immediately.
Water detected in fuel service required	amber	Have the system checked by a properly trained technician as soon as possible.
Engine malfunction service now	amber	Have the system checked by a properly trained technician as soon as possible.
Washer fluid level low	-	Check the washer fluid level. See **Washer Fluid Check** (page 214).
Engine oil change due	-	Have the system checked by a properly trained technician.

Occupant protection

Message	Indicator	Action
Service Beltminder	-	Have the system checked by a properly trained technician as soon as possible.

Parking aid

Message	Indicator	Action
Parking aid malfunction Service required	amber	Have the system checked by a properly trained technician as soon as possible.

Parking brake

Message	Indicator	Action
Park brake applied	red	See **Parking Brake** (page 140).
Park brake applied	amber	See **Parking Brake** (page 140).

Power steering

Message	Message indicator	Action
Steering lock malfunction stop safely	red	Stop your vehicle as soon as it is safe to do so and switch off the ignition. Have the system checked by a properly trained technician as soon as possible.
Steering loss stop safely	red	Stop your vehicle as soon as it is safe to do so and switch off the ignition. Have the system checked by a properly trained technician as soon as possible.
Steering assist malfunction service required	amber	Power steering. Full steering will be maintained but you will need to exert greater force on the steering wheel. Have the system checked by a properly trained technician as soon as possible.
Steering malfunction service now	amber	Have the system checked by a properly trained technician.

Stability control (ESP)

Message	Indicator	Action
Traction control off	amber	See **General Information** (page 79).

Starting the engine

Message	Message indicator	Action
Ford KeyFree switch ignition off press POWER	red	See **Keyless Starting** (page 124).
Drive to clean exhaust filter check handbook	amber	See **Diesel Particulate Filter** (page 126).
Engine malfunction service now	amber	See **Diesel Particulate Filter** (page 126).
Press brake to start	-	See **Keyless Starting** (page 124).
Press clutch to start	-	See **Keyless Starting** (page 124).
Press brake and clutch to start	-	See **Keyless Starting** (page 124).
Cranking time exceeded	-	
Engine preheating	-	See **Starting a Diesel Engine** (page 124).
Cleaning exhaust filter	-	See **Diesel Particulate Filter** (page 126).
Filter cleaning complete	-	See **Diesel Particulate Filter** (page 126).

Start-stop

Message	Message indicator	Action
Auto StartStop Switch ignition off	red	Switch the ignition off before leaving the vehicle if the system has shut down the engine. See **Using start-stop** (page 128).
Auto StartStop malfunction service required	amber	Have the system checked by a properly trained technician.
Auto StartStop Press clutch to start engine	-	The engine needs to be restarted, press the clutch pedal to start. See **Using start-stop** (page 128).
Auto StartStop Select neutral	-	Select neutral for the system to restart the engine. See **Using start-stop** (page 128).
Auto StartStop Manual Start required	-	The system is not functioning. A manual restart is required.

Transmission

Message	Message indicator	Action
Transmission too hot press brake	red	Under certain driving conditions it is possible that the clutches in the transmission can overheat. In these circumstances it is necessary to press the brake pedal and stop the vehicle to prevent further overheating. Select **N (NEUTRAL)** or **P (PARK)** and apply the foot brake and parking brake until the transmission has cooled and the message disappears from the display. If the vehicle is driven with this message active you may experience vehicle judder as a further overheat warning.
Transmission malfunction service now	red	Have the system checked by a properly trained technician as soon as possible.
Transmission overheating stop safely	red	The transmission is too hot. In these extreme conditions the transmission will disengage drive in order to prevent damage due to overheating. You will not be able to drive until the transmission has cooled. Select **N (NEUTRAL)** or **P (PARK)** and apply the foot brake and parking brake until the transmission has cooled and the message disappears from the display.
Transmission too hot press brake	amber	Under certain driving conditions it is possible that the clutches in the transmission can overheat. In these circumstances it is necessary to press the brake pedal and stop the vehicle to prevent further overheating. Select **N (NEUTRAL)** or **P (PARK)** and apply the foot brake and parking brake until the transmission has cooled and the message disappears from the display. If the vehicle is driven with this message active you may experience vehicle judder as a further overheat warning.
Transmission limited function check handbook	amber	Some gears may not be available. Have the system checked by a properly trained technician as soon as possible.
Transmission warming up please wait	-	At low outside temperatures, after starting the engine, it may take the transmission several seconds to engage **R (REVERSE)** or **D (DRIVE)**. Keep the brake pedal depressed until these messages disappear from the display.

Message	Message indicator	Action
Transmission not in Park select P	-	See **Automatic Transmission** (page 137).
To start press brake	-	See **Automatic Transmission** (page 137).
Press brake pedal	-	See **Automatic Transmission** (page 137).

Tyre pressure monitoring system

Message	Message indicator	Action
Check tyre pressures	amber	The pressure in one or more tyres has dropped. Check as soon as possible.
Tyre pressure sys malfunction service required	amber	Permanent malfunction. Have your vehicle checked by a properly trained technician.

PRINCIPLE OF OPERATION

Outside air

Keep the air intakes forward of the windscreen free from obstruction (snow, leaves etc.) to allow the climate control system to function effectively.

Recirculated air

CAUTION

Prolonged use of recirculated air may cause the windows to mist up. If the windows mist up, follow the settings for defrosting and demisting the windscreen.

The air currently in the passenger compartment will be recirculated. Outside air will not enter the vehicle.

Heating

Heating performance depends on the temperature of the engine coolant.

Air conditioning

Note: *The air conditioning operates only when the temperature is above 4°C (39°F).*

Note: *If you use the air conditioning, the fuel consumption of your vehicle will be higher.*

Air is directed through the evaporator where it is cooled. Humidity is extracted from the air to help keep the windows free of mist. The resulting condensation is directed to the outside of the vehicle and it is therefore normal if you see a small pool of water under your vehicle.

General information on controlling the interior climate

Fully close all the windows.

Warming the interior

Direct the air towards your feet. In cold or humid weather conditions, direct some of the air towards the windscreen and the door windows.

Cooling the interior

Direct the air towards your face.

AIR VENTS

Centre air vents

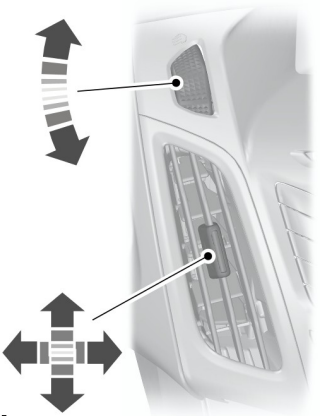

E132995

Side air vent

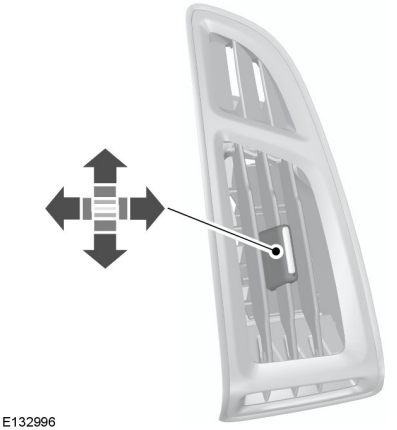

E132996

MANUAL CLIMATE CONTROL

Air distribution control

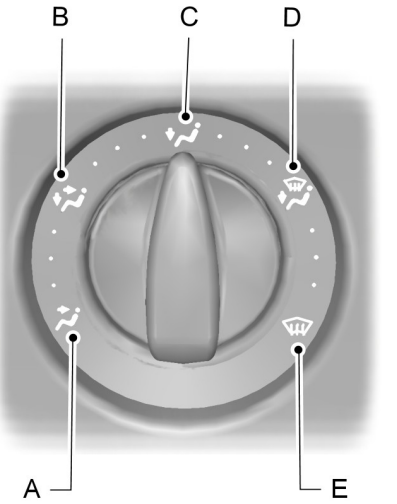

E74660

A	Face level
B	Face level and footwell
C	Footwell
D	Footwell and windscreen
E	Windscreen

You can set the air distribution control to any position between the symbols.

Blower

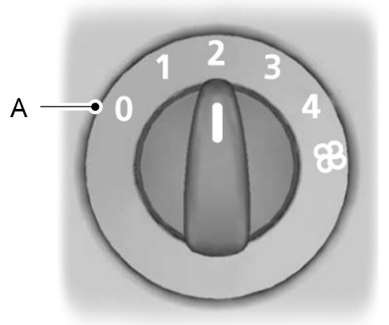

E75470

A Off

Note: *If you switch the blower off, the windscreen may mist up.*

Recirculated air

Press the button to toggle between outside air and recirculated air.

Heating the interior quickly

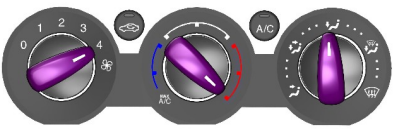

E129884

Ventilation

E129885

Set the air distribution control, blower and air vents to suit your requirements.

Air conditioning

Switching the air conditioning on and off

If you turn the blower off, the air conditioning will turn off. When you turn the blower on again, the air conditioning will come on automatically.

Cooling with outside air

E129886

Cooling the interior quickly

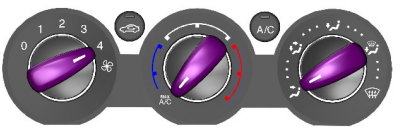

E129887

With the heater control in this position, the air conditioning and recirculated air will switch on automatically.

You can switch the air conditioning and recirculated air on and off.

Defrosting and demisting the windscreen

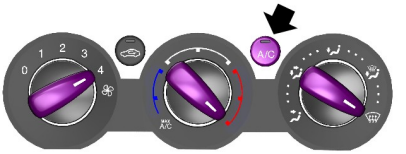

E129888

When the temperature is above 4ºC (39ºF), the air conditioning will switch on automatically. Make sure that the blower is on. The indicator in the switch will illuminate during defrosting and demisting.

If you move the air distribution control to a position other than windscreen, the **A/C** will remain on.

You can switch the air conditioning and recirculated air on and off while the air distribution control is set to windscreen

If necessary, switch the heated windows on. See **Heated Windows and Mirrors** (page 105).

Reducing interior air humidity

E129889

AUTOMATIC CLIMATE CONTROL

E133114

The system controls the temperature, amount and distribution of the air flow automatically and adjusts them according to the driving and weather conditions. Pressing the **AUTO** button once switches on the auto mode.

The system in your vehicle is dual-zone automatic climate control. When the system is in mono mode, all the temperature zones are linked to the driver's zone. When you switch mono mode off, the dual-zone system allows you to set different temperatures for the driver's and front passenger's side.

Note: *Avoid adjusting the settings when the vehicle interior is extremely hot or cold. The automatic climate control adjusts to the current circumstances automatically. For the system to function properly, the side and centre vents should be fully open.*

Note: *The sunload sensor is located on top of the instrument panel. Do not cover the sensor with any objects.*

Note: *At low outside temperatures, when the system is in auto mode, the air stream will be directed to the windscreen and the side windows as long as the engine is cold.*

Setting the temperature

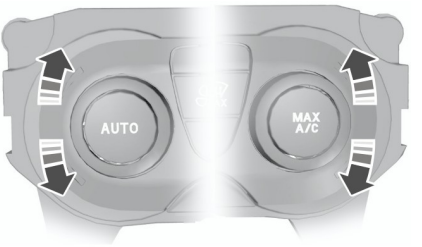

E133115

You can set the temperature between 15.5ºC (60ºF) and 29.5ºC (85ºF) in steps of 0.5ºC (1ºF). In position **LO**, 15ºC (59ºF), the system will switch to permanent cooling. In position **HI**, 30ºC (86ºF), the system will switch to permanent heating.

Note: *If either position **LO** or **HI** is selected, the system will not regulate a stable temperature.*

Mono mode

In mono mode, the temperature settings for both the driver's and passenger's side are linked. If you adjust the temperature using the rotary control on the driver's side, the settings will be adjusted to the same setting on the passenger's side. In mono mode, MONO appears in the display.

To switch mono mode off

Select a temperature for the passenger's side with the rotary control on the passenger's side. Mono mode will switch off and **MONO** disappears from the display. The temperature for the driver's side will remain unchanged. You can now adjust the driver and passenger side temperatures independently of each another. The temperature settings for each side are shown in the display. You can set a temperature difference of up to 4ºC (8ºF).

Note: *If you set a temperature difference of greater than 4ºC (8ºF), the temperature on the other side will be adjusted so that the difference remains 4ºC (8ºF).*

Note: *If you set one of the sides to **HI** or **LO**, both sides will be set to HI or LO.*

To switch mono mode back on

To switch mono mode back on, press and hold the **AUTO** button. **MONO** reappears in the display and the passenger's side temperature will be adjusted to the driver's side temperature.

Blower

Use the buttons to adjust the blower speed.

The blower setting is indicated in the display.

To return to auto mode, press the **AUTO** button.

Air distribution

To adjust air distribution, press the desired button. Any combination of settings can be selected simultaneously.

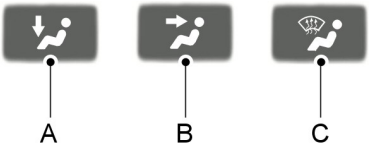

E70308

A Footwell
B Face level
C Windscreen

When you select windscreen defrosting and demisting, **A**, **B** and **C** switch off automatically and the air conditioning switches on. Outside air will flow into the vehicle. You cannot select recirculated air.

Cooling the interior quickly

E133122

Windscreen defrosting and demisting

Press the windscreen defrosting and demisting button. Outside air will flow into the vehicle. Air conditioning is automatically selected. As long as the air distribution is set to this position, you cannot select recirculated air.

The blower speed and the temperature control operate automatically and cannot be adjusted manually. The blower is set to high speed and the temperature to **HI**.

When you select windscreen defrosting and demisting, the heated screens switch on automatically and switch off after a short time.

To return to auto mode, press the **AUTO** button.

Switching the air conditioning on and off

Press the **A/C** button to switch the air conditioning on and off. **A/C OFF** appears in the display when the air conditioning is switched off.

A/C ON appears in the display when the air conditioning is switched on.

Recirculated air

Press the recirculated air button to toggle between outside air and recirculated air.

Note: *When the system is in auto mode and the interior and exterior temperatures are quite hot, the system selects recirculated air automatically to maximise cooling of the interior. Once the selected temperature is reached, the system will reselect outside air automatically.*

Switching off the automatic climate control

Press the button.

When switched off, the heating, ventilation and air conditioning system is switched off and recirculated air is selected.

HEATED WINDOWS AND MIRRORS

Heated windows

Use the heated windows to defrost or demist the windscreen or rear window.

Note: *The heated windows operate only when the engine is running.*

Heated windscreen

Heated rear window

Vehicles without auxiliary heater

If the ambient temperature is below 5ºC (41ºF) and the engine coolant is below 65ºC (149ºF), the heated windscreen and heated rear window will switch on automatically. They will switch off automatically.

Heated exterior mirrors

Electric exterior mirrors are fitted with a heating element that will defrost or demist the mirror glass. They will switch on automatically when you switch the heated rear window on.

ELECTRIC SUNROOF

WARNING

Before operating the electric sunroof you should verify it is free of obstructions and ensure that children and/or pets are not in the proximity of the sunroof opening. Failure to do so could result in serious personal injury. It is the primary responsibility of the supervising adults to never leave a child unattended in a vehicle and to never leave the keys in an unattended vehicle.

Note: *When the switches are operated often during a short period of time, the system might become inoperable for a certain time to prevent damage due to overheating.*

Note: *The electric sunroof can also be operated with the ignition off via the global opening and global closing function.* *See* ***Global Opening and Closing*** *(page 37).*

There are two ways of opening the sunroof – the rear of the sunroof lifts open or the sunroof opens from the front, sliding back under the roof. The sunroof opens and closes whilst the switch is pressed.

Switch on the ignition to operate the electric sunroof.

The power sunroof is operated by a switch located between the sun visors.

Opening and closing the sunroof

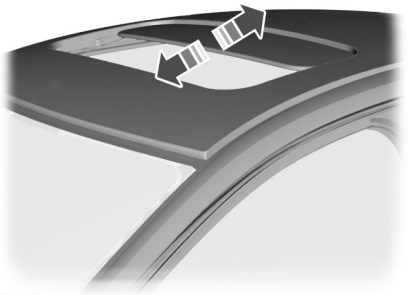

E72188

Tilting the sunroof

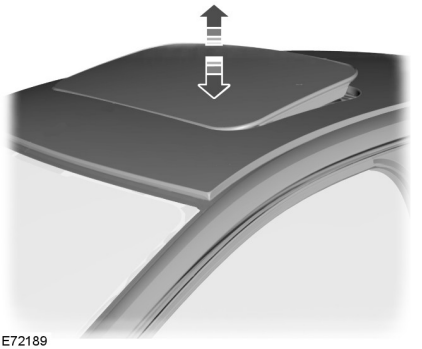

E72189

Opening and closing the sunroof automatically

Note: *When opening automatically, the sunroof will stop about 8 cm from the fully opened position. This position reduces the buffeting noise which is sometimes heard when the sunroof is fully open. The sunroof will only stop automatically in this position when the sunroof is opened automatically.*

To open or close the sunroof automatically press either side of the switch to the second action point and release it completely. Press again to stop.

When the closed position is reached, the sunroof stops automatically.

Sunroof anti-trap protection

WARNINGS

The anti-trap function is deactivated until the memory has been reset. Careless closing of the window can cause injuries.

Careless closing of the electric sunroof can override the anti-trap protection and cause injuries.

The sunroof will stop automatically while closing and reverse some distance if there is an obstacle in the way.

To override anti-trap protection when there is a resistance, e. g. in the winter, proceed as follows:

WARNING

While the sunroof is being closed for the third time, the anti-trap function is disabled. Make sure there are no obstacles in the way of the closing sunroof.

Close the sunroof a third time to the resistance. The anti-trap function is disabled and the sunroof cannot be closed automatically. The sunroof will override the resistance and can then be closed fully.

If the sunroof does not close after the third attempt, have it checked by an expert.

Sunroof safety mode

WARNING

The anti-trap function is not active during this procedure. Make sure that there are no obstacles in the way of the closing sunroof.

If the system detects a malfunction, it enters a safety mode. The sunroof will move for only about 0.5 seconds at a time and then stop again. Close the sunroof by pressing the button again when the sunroof stops moving. When the rear of the sunroof is lifted, lift the rear all the way and then close the sunroof. Have the system checked by an expert immediately.

Sunroof relearning

WARNING

The anti-trap function is not active during this procedure. Make sure that there are no obstacles in the way of the closing sunroof.

In case the sunroof no longer closes properly, follow this relearning procedure:

- Tilt the rear of the sunroof as far as possible. Release the button.
- Press and hold the same button again for 30 seconds until you see the sunroof move.
- Release the button and immediately press and hold it again. The sunroof will close, open fully and then close again. Do not release the button before the sunroof has reached the closed position for the second time.

If the button is not pressed continuously, the relearning function will be interrupted. Start the procedure once more from the beginning.

AUXILIARY HEATER

Parking heater

WARNINGS

The parking heater must not be operated at filling stations, near sources of combustible vapours or dust or in enclosed spaces.

The parking heater should be switched on for approximately 10 minutes at least once a month all year round. This prevents the water pump and heater motor from seizing.

Note: *The parking heater will only operate if there is at least 7.5 litres (1.6 gallons) of fuel in the fuel tank and the ambient temperature is below 15ºC (59ºF). The heater will not operate if the battery is low.*

Note: *The heating depends on the outside air temperature.*

Note: *When the parking heater is activated, exhaust fumes may come from under the sides of the vehicle. This is normal.*

Note: *On vehicles with manual climate control the heating of the vehicle interior is dependent on the temperature, air distribution and blower control settings.*

The parking heater operates independently of the vehicle heater by heating the engine's coolant circuit. It is fed from the vehicle fuel tank. You can also use it while the vehicle is in motion to help the vehicle heater warm up the interior more quickly.

Used properly, the parking heater provides the following benefits:

- It preheats the interior of the vehicle.
- It keeps the windows clear of ice in the event of frost and prevents condensation.
- It avoids cold starts and allows the engine to reach operating temperature sooner.

To prevent the battery from discharging:

- Once the parking heater has performed one heating cycle, the next programmed heating cycle will only be carried out if you have started the vehicle's engine in between.
- After a heating cycle, drive the vehicle for at least the period of the heating cycle.

Programming the parking heater

Note: *The programmed time is the time at which you wish the vehicle to be warm and ready to drive, not the time at which the heater switches on.*

Note: *You must programme the times at least 70 minutes in advance of the time you wish to set.*

Note: *You must set the time and date correctly. See* ***Clock*** *(page 118).*

To programme the heating times:

1. Use the arrow buttons on the steering wheel to enter the main menu. See **Information Displays** (page 79).
2. Select the park heater option.

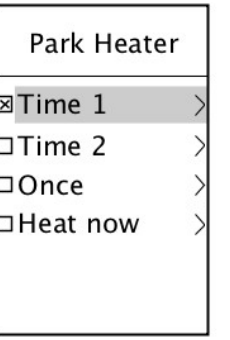

E136301

- The two time functions allow you to programme up to two heating cycles for each day of the week. These times will remain stored and the heater will warm up the vehicle at these times on these days every week.
- The function **once** allows you to programme one heating cycle for one specific day.
- The function **Heat now** automatically switches on the heater.

Programming the functions Time 1 and Time 2

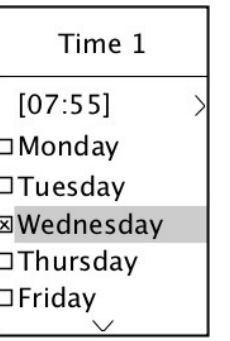

E74468

1. Use the arrow buttons on the steering wheel to enter the main menu.
2. Select the first programme time list.
3. Highlight the day on which the heater should warm up the vehicle.
4. Press the **OK** button.
5. Continue in the same way to select all the days on which the heater should warm up the vehicle.
6. To set the time at which the vehicle should be warmed up, highlight the time at the top of the display and press the **OK** button. The hours start to flash.
7. Adjust the hours and minutes as necessary.

You can use the second programme time list to set a second cycle, for example different times on different days or twice on the same day. The programming procedure is the same as for the first programme timer..

Deactivating the programmed heater

1. Use the arrow buttons on the steering wheel to enter the main menu.
2. Uncheck the active program session.

Programming the heater for a single cycle

1. Select **Once** and press the right arrow button.
2. Press the **OK** button and set the required time and date.
3. Press **OK** to confirm the set time and date.

Activating the heater manually

Highlight **Heat now** and press the **OK** button. A cross appears in the box when the heater is activated.

To deactivate the heater, uncheck the **Heat now** function.

Fuel operated heater (depending on country)

WARNING

The fuel operated heater must not be operated at filling stations, near sources of combustible vapours or dust or in enclosed spaces.

The fuel operated heater aids in warming the engine and the vehicle interior on vehicles with a diesel engine. It is switched on or off automatically depending on the outside air temperature and the coolant temperature, unless you have deactivated it.

To deactivate the fuel operated heater:

1. Highlight **Aux. Heater** and press the **OK** button. A cross appears in the box when the heater is activated.

Diesel auxiliary heater (depending on country)

The diesel auxiliary heater (PTC electrical heater) aids in warming the engine and the vehicle interior on vehicles with a diesel engine. It is switched on or off automatically depending on the outside air temperature, the coolant temperature and the alternator load.

SITTING IN THE CORRECT POSITION

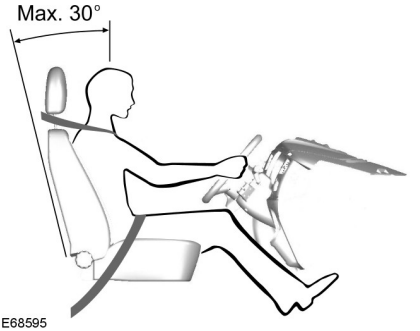

E68595

WARNINGS

Do not adjust the seats when the vehicle is moving.

Only when you use the seat belt properly, can it hold you in a position that allows the airbag to achieve its optimum effect.

When you use them properly, the seat, head restraint, seat belt and airbags will provide optimum protection in the event of a collision. We recommend that you:

- sit in an upright position with the base of your spine as far back as possible.
- do not recline the seatback more than 30 degrees.
- adjust the head restraint so that the top of it is level with the top of your head and as far forwards as possible, remaining comfortable.
- keep sufficient distance between yourself and the steering wheel. We recommend a minimum of 250 millimetres (10 inches) between your breastbone and the airbag cover.
- hold the steering wheel with your arms slightly bent.
- bend your legs slightly so that you can press the pedals fully.
- position the shoulder strap of the seat belt over the centre of your shoulder and position the lap strap tightly across your hips.

Make sure that your driving position is comfortable and that you can maintain full control of your vehicle.

MANUAL SEATS

Moving the seats backwards and forwards

E130249

WARNING

Rock the seat backwards and forwards after releasing the lever to make sure that it is fully engaged in its catch.

Adjusting the lumbar support

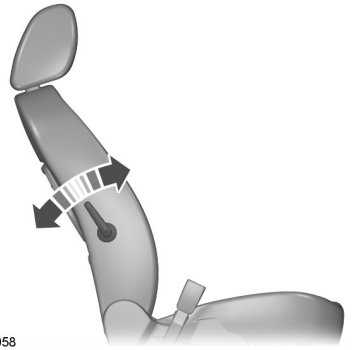
E78058

Adjusting the height of the driver's seat

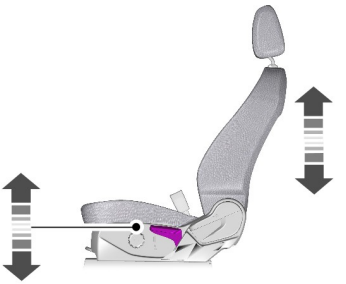
E70730

Adjusting the angle of the seatback

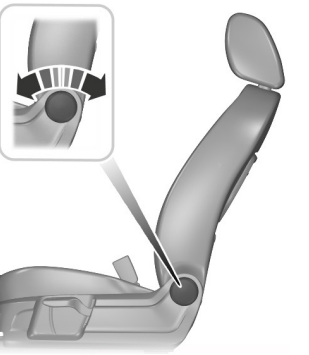
E130250

HEAD RESTRAINTS

WARNINGS

Raise the rear head restraint when the rear seat is occupied by a passenger.

Do not remove the front head restraints when the front seats are in use.

When using a forward facing child restraint on a rear seat, always remove the head restraint from that seat.

Adjusting the head restraint

Adjust the head restraint so that the top of it is level with the top of your head.

Removing the head restraints

Front head restraints

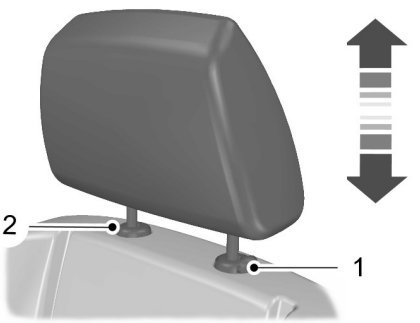

E140447

Press locking button 1 and at the same time release the retaining clip 2 using a suitable implement.

Rear outer head restraints

E135437

Press the locking button and remove the head restraint.

Rear inner head restraint

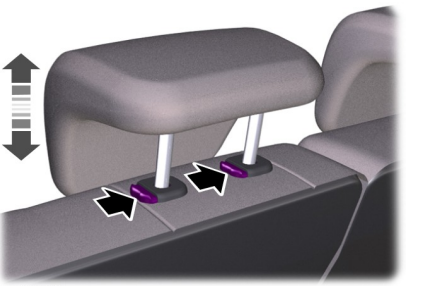

E135401

Press the locking buttons and remove the head restraint.

POWER SEATS - VEHICLES WITH: 6-WAY POWER SEATS

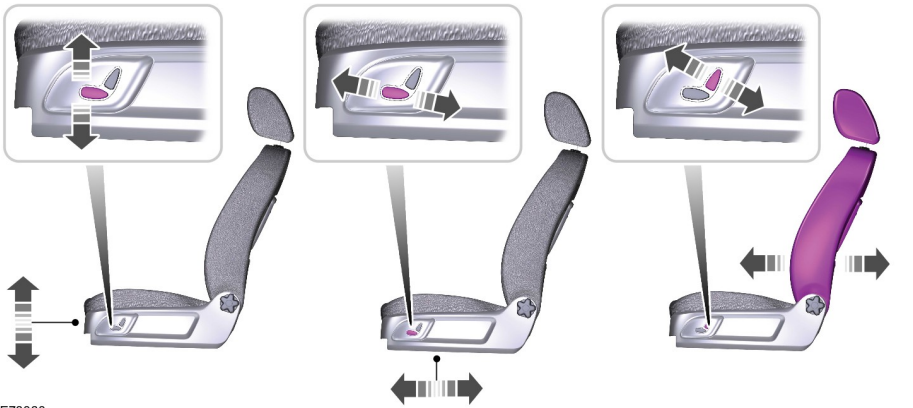

E78060

POWER SEATS - VEHICLES WITH: 8-WAY POWER SEATS

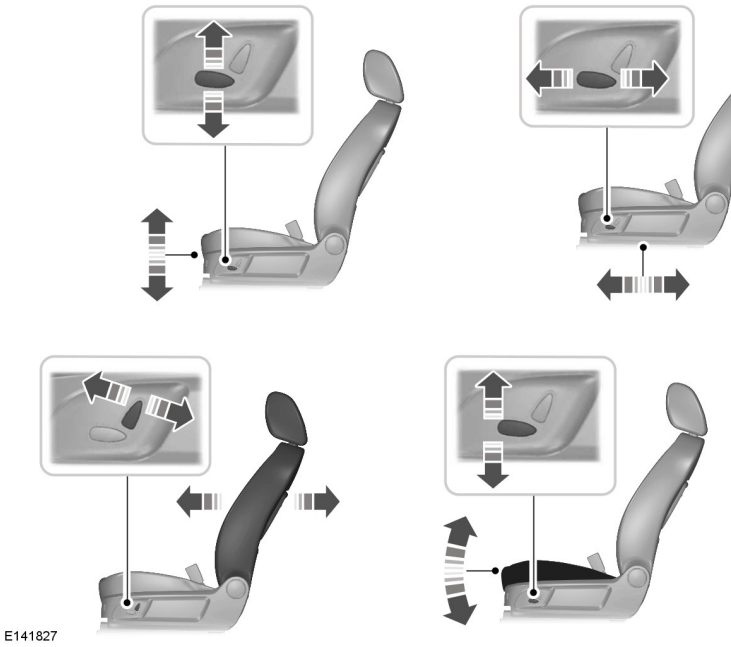

Adjust the length of the seat cushion

E78816

Press the locking handle underneath the cushion extension and slide the extension forward or backward.

REAR SEATS

WARNINGS

When folding the seatbacks down and up, take care not to get your fingers caught between the seatback and seat frame.

Make sure that the seats and the seatbacks are secure and fully engaged in their catches.

Folding the rear seatbacks forwards

WARNING

Lower the head restraints. See **Head Restraints** (page 111).

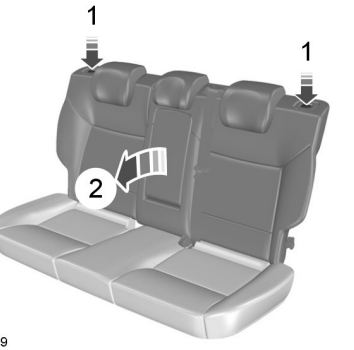

E135629

1. Press and hold the unlock buttons.
2. Push the seatback forwards.

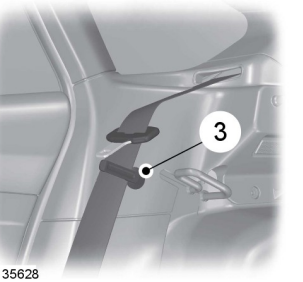

E135628

Note: *Make sure that the seat belt is fully tightened into the retractor.*

3. Place the seat belts in the clips on the outboard trim.

Folding the seat cushions and the rear seatbacks forwards

WARNINGS

Make sure the red indicator is not showing when you engage the seat in the catches.

Lower the head restraints. See **Head Restraints** (page 111).

When inserting your fingers between the seat cushion and seatback, take care not to get your fingers caught on the ISOFIX anchor points and bracket. See **ISOFIX Anchor Points** (page 22).

E135646

Note: *Hold the cushion edge to avoid the ISOFIX anchor points and brackets.*

1. Insert your fingers between the seat cushion and seatback and fold the seat cushion forwards.
2. Press and hold the unlock buttons.
3. Push the seatback forwards.

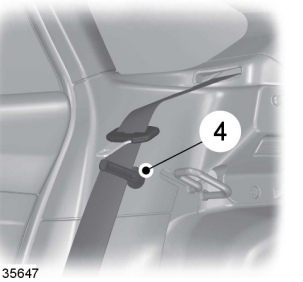

E135647

Note: *Make sure that the seat belt is fully tightened into the retractor.*

4. Place the seat belts in the clips on the outboard trim.

Folding the seatbacks up

WARNING

When folding the seatbacks up, make sure that the belts are visible to an occupant and not caught behind the seat.

HEATED SEATS

CAUTION

Operating this function with the engine off will drain the battery.

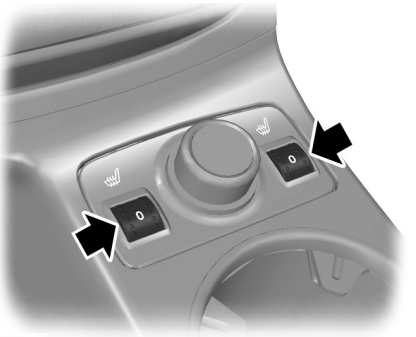

E130471

The maximum temperature is reached after five or six minutes. It is regulated thermostatically.

The seat heating will operate only when the ignition is on.

INSTRUMENT LIGHTING DIMMER

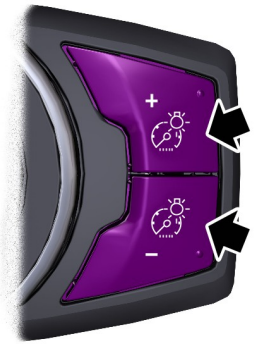

E132712

Press repeatedly or press and hold until the desired level is reached.

Note: *If the battery is disconnected, discharged, or a new battery is installed, the dimmer will set the illuminated components to the maximum setting automatically.*

CLOCK

See **Information Displays** (page 79).

CIGAR LIGHTER

CAUTIONS

If you use the socket when the engine is not running, the battery may discharge.

Do not hold the cigar lighter element pressed in.

Note: *You can use the socket to power 12 volt appliances that have a maximum current rating of 10 Amperes. Use only Ford accessory connectors or connectors specified for use with SAE standard sockets.*

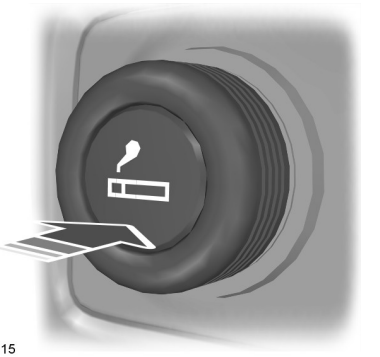

E132415

Press the element in to use the cigar lighter. It will pop out automatically.

AUXILIARY POWER POINTS

CAUTION

If you use the socket when the engine is not running, the battery may discharge.

Note: *You can use the socket to power 12 volt appliances that have a maximum current rating of 10 Amperes. Use only Ford accessory connectors or connectors specified for use with SAE standard sockets.*

E78056

Auxiliary power sockets are located in the centre console and in the luggage compartment.

CUP HOLDERS

WARNING

Do not place hot drinks in the cup holders when the vehicle is moving.

Rear seat armrest

E132505

GLASSES HOLDER

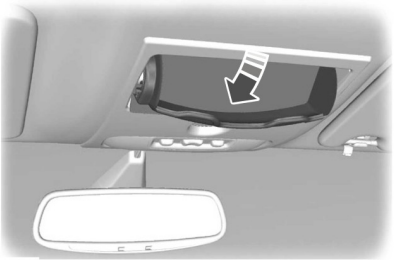

E75193

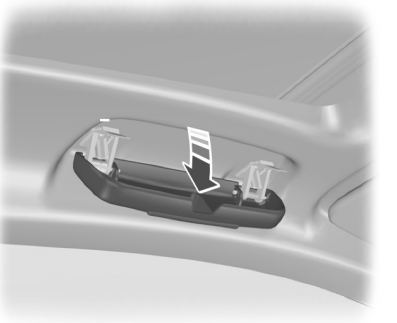

E91508

CHILDMINDER MIRROR

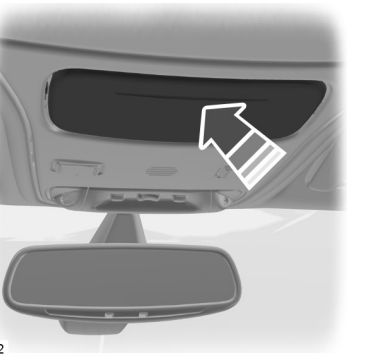

E75192

AUXILIARY INPUT SOCKET

You can find the socket in the glove box or the centre console. See **Auxiliary input (AUX IN) socket** (page 262).

USB PORT

You can find the socket in the glove box or the centre console. See **Connectivity** (page 284).

SATELLITE NAVIGATION UNIT HOLDER

Adjusting the holder

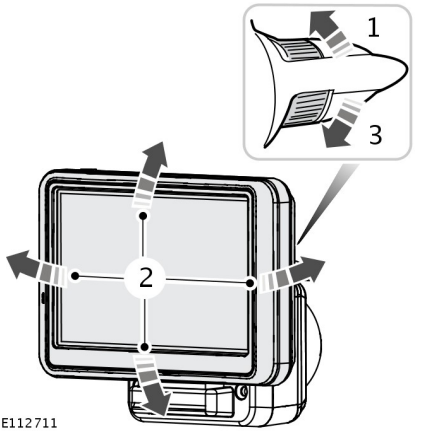

1. Unlock.
2. Adjust the holder to the desired position.
3. Lock.

Note: *Make sure that the navigation unit holder is locked in position.*

BOTTLE HOLDER

E157030

GENERAL INFORMATION

General points on starting

If the battery has been disconnected the vehicle may exhibit some unusual driving characteristics for approx. 8 kilometres (5 miles) after reconnecting the battery.

This is because the engine management system must realign itself with the engine. Any unusual driving characteristics during this period may be disregarded.

Starting the engine by towing or pushing

WARNING

To prevent damage you must not push or tow start your vehicle. Use booster cables and a booster battery. See **Jump-Starting the Vehicle** (page 220).

IGNITION SWITCH

WARNING

Never return the key to position **0** or **I** when the vehicle is in motion.

E72128

0 The ignition is off.

I The ignition and all main electrical circuits are disabled.

Note: *Do not leave the ignition key in this position for too long to avoid discharging the battery.*

II The ignition is switched on. All electrical circuits are operational. Warning lamps and indicators illuminate. This is the key position when driving. You must also select it when being towed.

III The starter motor is activated. Release the key as soon as the engine starts.

STEERING WHEEL LOCK

WARNING

Always check that the steering is unlocked before attempting to move your vehicle.

Vehicles without keyless starting

To activate the steering wheel lock;

1. Remove the key from the ignition switch.
2. Turn the steering wheel.

Vehicles with keyless starting

Note: *The steering wheel lock will not activate when the ignition is on or the vehicle is moving.*

Your vehicle has an electronically controlled steering wheel lock. This operates automatically.

The steering wheel lock will activate after a short period of time once you have parked your vehicle and the passive key is outside of the vehicle, or when you lock the vehicle. See **Keyless Entry** (page 35).

Deactivating the steering wheel lock

Switch the ignition on, or:

Vehicles with automatic transmission

- Press the brake pedal.

Vehicles with manual transmission

- Press the clutch pedal.

STARTING A PETROL ENGINE

Note: *You can only operate the starter for a limited period of time, for example 10 seconds. The number of start attempts is limited to approximately six. If you exceed this limit, the system will not allow you to try again until a period of time has elapsed, for example 30 minutes.*

Cold or hot engine

Vehicles with manual transmission

Note: *Do not touch the accelerator pedal.*

Note: *Releasing the clutch pedal during engine start may stop the engine cranking and return to ignition on.*

1. Fully depress the clutch pedal.
2. Start the engine.

Vehicles with automatic transmission

Note: *Do not touch the accelerator pedal.*

Note: *Releasing the brake pedal during engine start may stop the engine cranking and return to ignition on.*

1. Move the transmission selector lever to position P or N.
2. Fully depress the brake pedal.
3. Start the engine.

All vehicles

If the engine does not start, wait for a short period and try again.

If the engine does not start after three attempts, wait 10 seconds and follow the flooded engine procedure.

If you have difficulty starting the engine when the temperature is below -25ºC (-13ºF), press the accelerator pedal to the mid-way point of its travel and try again.

Flooded engine

Vehicles with manual transmission

1. Fully depress the clutch pedal.
2. Fully depress the accelerator pedal and hold it there.
3. Start the engine.

Vehicles with automatic transmission

1. Move the transmission selector lever to position P or N.
2. Fully depress the accelerator pedal and hold it there.
3. Fully depress the brake pedal.
4. Start the engine.

All vehicles

If the engine does not start, repeat the cold or hot engine procedure.

Engine idle speed after starting

The speed at which the engine idles immediately after starting will vary depending on the engine temperature.

The idle speed is automatically increased when the engine is cold this is to heat the catalytic converter. This keeps the vehicle emissions to an absolute minimum.

The idle speed will slowly decrease to the normal level as the catalytic converter warms up.

STARTING A PETROL ENGINE - E85

For general information on starting a petrol engine. See **Starting a Petrol Engine** (page 123).

Starting at low ambient temperatures

When the temperature is lower than -10ºC (14ºF) and the vehicle is filled with E85, an engine block heater should be used to facilitate starting. See **Engine Block Heater** (page 127). Failure to do this will result in a non start.

If the temperature is expected to remain below -10ºC (14ºF), it is recommended that you increase the proportion of petrol in the tank by topping up with 95 octane unleaded petrol if the tank is not already full. About 10 litres (2.2 gallons) of petrol will reduce the proportion of E85 in a ¾ full tank from 85% to 70% and will considerably improve cold start capability.

If, at very low temperatures, the tank is filled with only E85 and there is no way to use an engine block heater, you may experience difficulties starting the engine.

If the engine fails to start, proceed as follows:

1. Fully depress the accelerator pedal.
2. Turn the ignition key to position III.

CAUTION

Release the ignition key as soon as the engine has started.

3. Gradually release the accelerator pedal after five seconds of engine cranking or as the engine speed rises.

If the engine fails to start, repeat steps 1, 2 and 3, or connect an engine block heater for two hours before attempting another start.

During starting, the fuel injectors are turned off as long as the accelerator pedal is depressed. This can be used to drain excessive fuel from the intake manifold after several unsuccessful starting attempts.

If the battery has been disconnected or after the fuel type has been changed, the idle speed may be irregular. This will improve after 10 to 30 seconds.

STARTING A DIESEL ENGINE

Cold or hot engine

All vehicles

Note: *When the temperature is below -15ºC (5ºF), you may need to crank the engine for up to 25 seconds.*

Note: *Continue cranking the engine until it starts.*

Note: *You can only operate the starter for a maximum of 30 seconds at a time.*

Switch the ignition on and wait until the glow plug indicator goes off.

Vehicles with manual transmission

Note: *Do not touch the accelerator pedal.*

1. Fully depress the clutch pedal.
2. Start the engine.

Vehicles with automatic transmission

1. Select park or neutral.
2. Fully depress the brake pedal.
3. Start the engine.

KEYLESS STARTING

WARNINGS

The keyless starting system may not function if the key is close to metal objects or electronic devices such as mobile phones.

WARNINGS

Always check that the steering wheel lock is deactivated before attempting to move your vehicle. See **Steering Wheel Lock** (page 122).

Note: *The ignition may automatically switch off after a period of time if your vehicle has been left unattended with the ignition on. This is to prevent the vehicle battery from discharging.*

Note: *A valid passive key must be located inside the vehicle to switch the ignition on and start the engine.*

Note: *To start your engine you must also fully depress the brake or clutch pedal, depending on the transmission fitted.*

E85766

Ignition on

Press the button once. All electrical circuits are operational, warning lamps and indicators illuminate.

Starting with manual transmission

Note: *Releasing the clutch pedal during engine start will stop the engine cranking and return to ignition on.*

1. Fully depress the clutch pedal.
2. Briefly press the button.

Starting with automatic transmission

Note: *Releasing the brake pedal during engine start may stop the engine cranking and return to ignition on.*

1. Fully depress the brake pedal.
2. Move the transmission selector lever to position P or N.
3. Briefly press the button.

Starting a diesel engine

Note: *Engine cranking may not commence until the engine glow plug cycle has been completed. This may take several seconds in extremely cold conditions.*

Note: *Continue to press the clutch or brake pedal until engine cranking begins.*

Failure to start

The passive starting system will not function if:

- The passive key frequencies are jammed.
- The passive key battery is flat.

If you are unable to start your vehicle carry out the following procedure.

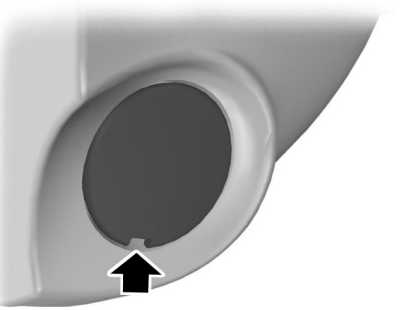

E87381

1. Carefully prise out the cover.

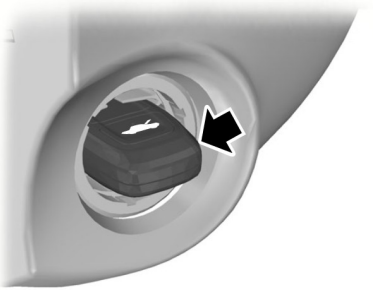

E85767

2. Insert the key into the key holder.

E85766

3. With the key in this position you can press the button to switch the ignition on and start your vehicle.

Stopping the engine with the vehicle stationary

Note: *The ignition, all electrical circuits, warning lamps and indicators will be switched off.*

Manual transmission

Briefly press the button.

Automatic transmission

1. Move the transmission selector lever to position P.
2. Briefly press the button.

Stopping the engine when the vehicle is moving

WARNING

Switching off the engine when the vehicle is still moving will result in a loss of brake and steering assistance. The steering will not be locked, but higher effort will be required. When the ignition is switched off some electrical circuits, warning lamps and indicators may also be OFF.

Press and hold the button or press twice within two seconds.

DIESEL PARTICULATE FILTER

The DPF forms part of the emissions reduction systems fitted to your vehicle. It filters harmful diesel particulates (soot) from the exhaust gas.

Regeneration

WARNING

Do not park or idle your vehicle over dry leaves, dry grass or other combustible materials. The DPF regeneration process creates very high exhaust gas temperatures and the exhaust will radiate a considerable amount of heat during and after DPF regeneration, and after you have switched the engine off. This is a potential fire hazard.

CAUTION

Avoid running out of fuel.

Note: *During regeneration at low speed or engine idle, you may smell a hot metallic odour and could notice a clicking metallic sound. This is due to the high temperatures reached during regeneration and is normal.*

Note: *After you have switched your engine off the fans may continue to run for a short period of time.*

Unlike a normal filter which requires periodic replacement, the DPF has been designed to regenerate, or clean itself to maintain operating efficiency. The regeneration process takes place automatically. However, some driving conditions mean that you may need to support the regeneration process.

If you drive only short distances or your journeys contain frequent stopping and starting, where there is increased acceleration and deceleration, occasional trips with the following conditions will assist the regeneration process:

- Drive your vehicle at a constant speed, preferably on a main road or motorway, for up to 20 minutes.
- Avoid prolonged idling and always observe speed limits and road conditions.
- Do not switch off the ignition.
- Use a lower gear than normal to maintain a higher engine speed during this journey, where appropriate.

SWITCHING OFF THE ENGINE

Vehicles with a turbocharger

CAUTION

Do not switch the engine off when it is running at high speed. If you do, the turbocharger will continue running after the engine oil pressure has dropped to zero. This will lead to premature turbocharger bearing wear.

Release the accelerator pedal. Wait until the engine has reached idle speed and then switch it off.

ENGINE BLOCK HEATER

CAUTION

Make sure you disconnect the power cable from the engine heater connector before driving away.

Note: *The engine heater connector is located in the front bumper.*

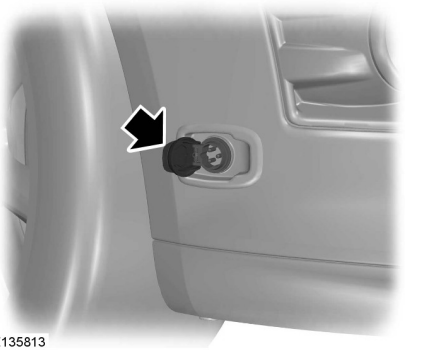

E135813

Connect the engine heater for two to three hours before starting the engine.

PRINCIPLE OF OPERATION

CAUTION

For vehicles with Start-stop the battery requirement is different. It must be replaced by one of exactly the same specification as the original.

The system reduces fuel consumption and CO2 emissions by shutting down the engine when the vehicle is idling, for example at traffic lights. The engine will automatically restart when the driver presses the clutch pedal or when required by a vehicle system, for example to recharge the battery.

To obtain maximum benefit from the system, move the gear lever to the neutral position and release the clutch pedal during any stop of longer than three seconds.

USING START-STOP

WARNINGS

The engine may restart automatically if required by the system. See **Principle of Operation** (page 128).

Switch the ignition off before opening the bonnet or carrying out any maintenance.

Always switch the ignition off before leaving your vehicle, as the system may have shut down the engine but the ignition will still be live.

Note: *The system only operates when the engine is warm and the outside temperature is between 0ºC (32ºF) and 30ºC (86ºF).*

Note: *If you stall the engine, and then depress the clutch pedal within a couple of seconds, the system will automatically restart the engine.*

Note: *The Start-stop indicator will illuminate green when the engine shuts down. See **Warning Lamps and Indicators** (page 74).*

Note: *The Start-stop indicator will flash amber, requiring you to select neutral or depress the clutch pedal. In conjunction a message will be shown in the display.*

Note: *If the system detects a malfunction, it is deactivated. Have the system checked by a properly trained technician.*

Note: *If you have switched the system off, the switch will be illuminated.*

Note: *The system is on by default. To switch the system off, press the switch in the instrument panel. The system will only be de-activated for the current ignition cycle. To turn it on, press the switch again. For item location. See **At a Glance** (page 11).*

To stop the engine

1. Stop the vehicle.
2. Move the gear lever to the neutral position.
3. Release the clutch pedal.
4. Release the accelerator pedal.

The system may not shut down the engine under certain conditions, for example:

- To maintain the interior climate.
- Low battery voltage.
- The outside temperature is too low or too high.
- The driver's door has been opened.

- Low engine operating temperature.
- Low brake system vacuum.
- If a road speed of 5 km/h (3 mph) has not been exceeded.
- The driver's seat belt has not been fastened.

To re-start the engine

Note: *The gear lever must be in the neutral position.*

Depress the clutch pedal.

The system may automatically restart the engine under certain conditions, for example:

- Low battery voltage.
- To maintain the interior climate.

PRINCIPLE OF OPERATION

The system assists the driver to drive more efficiently by constantly monitoring characteristics of gear changing, anticipation of traffic conditions and speeds on motorways and open roads.

Note: *These efficiency values do not result in a defined fuel consumption figure. It might vary as it is not only related to these driving disciplines but also influenced by many other factors such as short journeys and cold starts.*

Note: *Frequent short journeys, where the engine does not fully warm up, will also increase fuel consumption.*

The value of these characteristics is represented by petals shown in the display, with five petals being the most efficient. The more efficiently you drive, the better the rating, and the better your overall fuel consumption.

Type 1

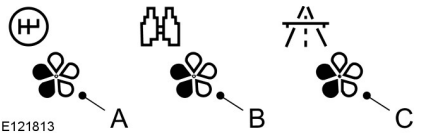

A Gear shifting
B Anticipation
C Efficient speed

Gear shifting

Using the highest drivable gear appropriate for the road conditions will improve fuel consumption.

Anticipation

Adjusting your vehicle speed and the distance to other vehicles without the need for heavy braking or acceleration will improve fuel consumption.

Efficient speed

Higher speeds use more fuel. Reducing your cruising speed on open roads will improve fuel consumption.

Type 2 and 3

The relevant information will be shown in the display.

USING ECO MODE

The system is accessed using the relevant information display menu. See **Information Displays** (page 79).

Resetting Eco mode

Reset the average fuel consumption.

Note: *New values may take a short time to calculate.*

SAFETY PRECAUTIONS

WARNINGS

Stop refuelling after the fuel nozzle stops the second time. Additional fuel will fill the expansion space in the fuel tank which could lead to fuel overflowing. Fuel spillage could be hazardous to other road users.

Do not use any kind of flames or heat near the fuel system. The fuel system is under pressure. There is a risk of injury if the fuel system is leaking.

FUEL QUALITY - PETROL

CAUTION

Do not use leaded petrol or petrol with additives containing other metallic compounds (e.g. manganese-based). They could damage the emission system.

Note: *We recommend that you use only high quality fuel without additives or other engine treatments.*

Use minimum 95 octane unleaded petrol that meets the specification defined by EN 228, or the equivalent national specification.

Your vehicle is suitable for use with ethanol blends up to 10% (E5 and E10).

FUEL QUALITY - E85

WARNINGS

Do not modify the fuel system configuration or the components in the system.

Do not replace the fuel system or the components with parts not specially designed to be used with E85.

CAUTIONS

Do not use leaded petrol or petrol with additives containing other metallic compounds (e.g. manganese-based). They could damage the emission system.

Do not use methanol instead of E85.

Note: *We recommend that you use only high quality fuel without additives or other engine treatments.*

Note: *When using E85, you may experience a higher fuel consumption.*

Note: *Your vehicle will operate well on commercial quality 95 octane unleaded petrol, but only high quality E85 offers the same protection and performance.*

Use **minimum 95 octane unleaded** petrol that meets the specification defined by **EN 228**, or equivalent. You can also use a mixture of unleaded petrol and E85.

Long-term storage

Due to small amounts of corrosive impurities that may be found in the E85, it is recommended that you fill the tank with only 95 octane unleaded petrol prior to long-term storage of your vehicle.

FUEL QUALITY - DIESEL

WARNING

Do not mix diesel with oil, petrol or other liquids. This could cause a chemical reaction.

CAUTIONS

Do not add kerosene, paraffin or petrol to diesel. This could cause damage to the fuel system.

CAUTIONS

Use diesel that meets the specification defined by **EN 590**, or the relevant national specification.

Note: *We recommend that you use only high quality fuel.*

Note: *The use of additives or other engine treatments not approved by Ford is not recommended.*

Note: *We do not recommend the prolonged use of additives intended to prevent fuel waxing.*

Long-term storage

Most diesel fuels contain bio-diesel, it is recommended to fill the tank with purely mineral diesel (where available) or add an anti-oxidant prior to long-term storage of your vehicle exceeding two months. Your dealer can help you with a suitable anti-oxidant.

CATALYTIC CONVERTER

WARNING

Do not park or idle your vehicle over dry leaves, dry grass or other combustible materials. The exhaust will radiate a considerable amount of heat during use, and after you have switched the engine off. This is a potential fire hazard.

Driving with a catalytic converter

CAUTIONS

Avoid running out of fuel.

Do not crank the engine for long periods.

Do not run the engine when a spark plug lead is disconnected.

CAUTIONS

Do not push-start or tow-start your vehicle. Use booster cables. See **Jump-Starting the Vehicle** (page 220).

Do not switch the ignition off when driving.

FUEL FILLER FLAP

WARNINGS

Take care when refuelling to avoid spilling any residual fuel from the fuel nozzle.

Do not use any kind of flames or heat near the fuel system. The fuel system is under pressure. There is a risk of injury if the fuel system is leaking.

CAUTION

If you use a high pressure spray to wash your vehicle, only spray the fuel filler flap briefly from a distance not less than 200 millimetres (8 inches).

Type 1

E135934

Type 2

E135935

1. Press the flap to open it. Open the flap fully until it engages.

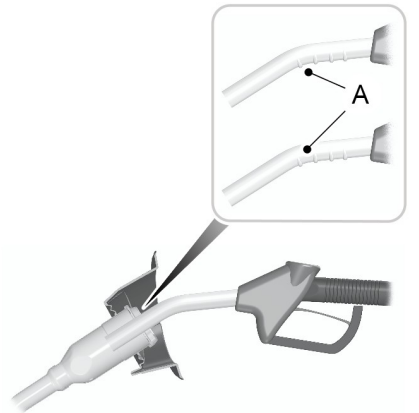

E139202

Note: *When you insert the fuel nozzle, a spring loaded inhibitor will open if the correct size nozzle is detected. This helps to avoid filling up with the wrong fuel.*

2. Insert the fuel nozzle up to and including the first notch on the nozzle **A**. Keep it resting on the cover of the fuel pipe opening.

WARNING

Stop refuelling after the fuel nozzle stops the second time. Additional fuel will fill the expansion space in the fuel tank which could lead to fuel overflowing. Fuel spillage could be hazardous to other road users.

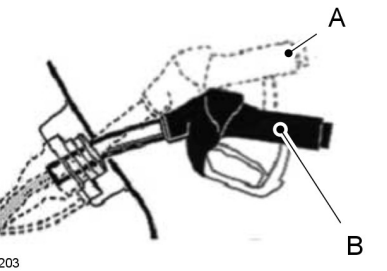

E139203

A Incorrect position
B Correct position

3. Do not lift the nozzle during refilling. This can affect the flow of fuel and shut off of the fuel nozzle before the fuel tank is full.

Type 1

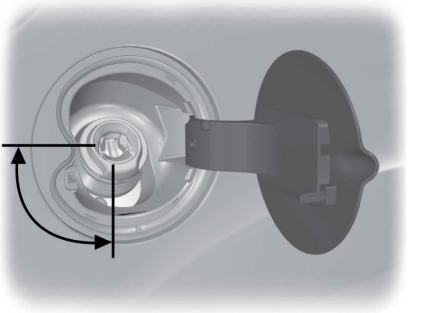

E139204

Type 2

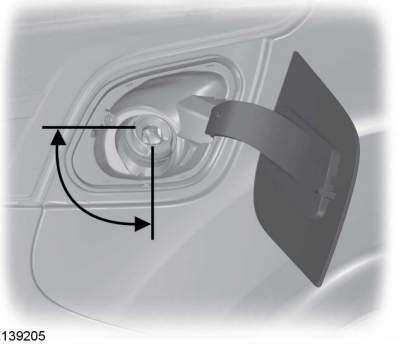

E139205

4. Operate the nozzle within the area shown.

WARNINGS

We recommend that you remove the fuel nozzle slowly to allow any residual fuel to drain into the fuel tank. Alternatively you can wait 10 seconds before removing the fuel nozzle.

Do not remove the nozzle from its fully inserted position during the entire refuelling process.

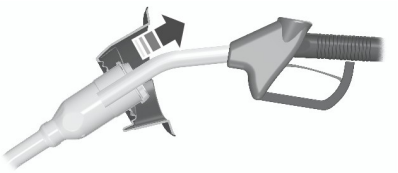

E119081

5. Slightly raise the fuel nozzle to remove it.

Refuelling with a fuel can

Use the funnel which is located in the glove box.

REFUELLING

CAUTION

Do not attempt to start the engine if you have filled the fuel tank with the incorrect fuel. This could damage the engine. Have the system checked by a properly trained technician immediately.

REFUELLING - E85

CAUTION

Do not attempt to start the engine if you have filled the fuel tank with the incorrect fuel. This could damage the engine. Have the system checked by a properly trained technician immediately.

After refuelling, allow 5 minutes of normal engine operation above 48 km/h (30 mph) to reduce the risk of an increased engine restart time.

FUEL CONSUMPTION

The CO2 and fuel consumption figures are derived from laboratory tests according to EEC Directive 80/1268/EEC and subsequent amendments and are carried out by all vehicle manufacturers.

They are intended as a comparison between makes and models of vehicles. They are not intended to represent the real world fuel consumption you may get from your vehicle. Real world fuel consumption is governed by many factors including; driving style, high speed driving, stop/start driving, air conditioning usage, the accessories fitted and towing etc.

Your Ford dealer can give you advice on improving your fuel consumption.

TECHNICAL SPECIFICATIONS

Focus

Fuel Consumption Figures

Variant	Urban	Extra-Urban	Combined	CO2 Emissions
	l/100 km (mpg)	l/100 km (mpg)	l/100 km (mpg)	g/km
1.0L EcoBoost (73kW/100PS), 5-door	5.9 (47.9)	4.1 (68.9)	4.8 (58.9)	109
1.0L EcoBoost (73kW/100PS), 4-door and estate	6 (47.1)	4.2 (67.3)	4.9 (57.6)	112
1.0L EcoBoost (92kW/125PS), 5-door	6.3 (44.8)	4.2 (67.3)	5 (56.5)	114
1.0L EcoBoost (92kW/125PS), 4-door and estate	6.4 (44.1)	4.4 (64.2)	5.1 (55.4)	117
1.6L Duratec-16V Ti-VCT, 5-door, vehicles with manual transmission	8 (35.3)	4.7 (60.1)	5.9 (47.9)	136
1.6L Duratec-16V Ti-VCT, 4-door and estate, vehicles with manual transmission	8.1 (34.9)	4.8 (58.9)	6 (47.1)	139
1.6L Duratec-16V Ti-VCT, vehicles with DPS6 automatic transmission	9.3 (30.4)	4.8 (58.9)	6.4 (44.1)	149
1.6L EcoBoost, vehicles without start-stop	8.3 (34)	5 (56.5)	6.2 (45.6)	144
1.6L EcoBoost, vehicles with start-stop	7.7 (36.7)	5 (56.5)	6 (47.1)	139
2.0L Duratec-HE - MI4, vehicles with manual transmission	9.6 (29.4)	5 (56.5)	6.7 (42.2)	149

Variant	Urban	Extra-Urban	Combined	CO2 Emissions
	l/100 km (mpg)	l/100 km (mpg)	l/100 km (mpg)	g/km
2.0L Duratec-HE - MI4, vehicles with automatic transmission	9.1 (31)	4.9 (57.6)	6.4 (44.1)	156
2.0L EcoBoost - MI4	9.9 (28.5)	5.6 (50.4)	7.2 (39.2)	169
1.6L Duratorq-TDCi, vehicles without start-stop	5.7 (49.6)	3.7 (76.3)	4.5 (62.8)	117
1.6L Duratorq-TDCi, vehicles with start-stop	5.1 (55.4)	3.7 (76.3)	4.2 (67.3)	109
2.0L Duratorq-TDCi - DW, vehicles with manual transmission	6.3 (44.8)	4.2 (67.3)	5 (56.5)	129
2.0L Duratorq-TDCi - DW, vehicles with automatic transmission	6.8 (41.5)	4.4 (64.2)	5.3 (53.3)	139

MANUAL TRANSMISSION

Selecting reverse gear

CAUTION

Do not engage reverse gear when the vehicle is moving. This can cause damage to the transmission.

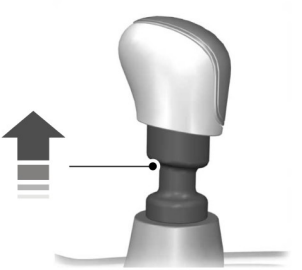

E99067

On some vehicles it is necessary to raise the collar whilst selecting reverse gear.

Vehicles with 5-speed transmission

CAUTION

Fully depress the clutch pedal and wait for three seconds before you select reverse gear.

AUTOMATIC TRANSMISSION

Selector lever positions

E133124

P	Park
R	Reverse
N	Neutral
D	Drive
S	Sport mode and manual shifting
+	Manual shift up
-	Manual shift down

WARNING

Apply the brakes before moving the selector lever and keep them applied until you are ready to move off.

Press the button on the selector lever to change to each position.

The selector lever position will be shown in the information display.

Park

WARNINGS

Select park only when your vehicle is stationary.

WARNINGS

Apply the parking brake and select park before leaving your vehicle. Make sure that the selector lever is latched in position.

Note: *An audible warning will sound if you open the driver's door and you have not selected park.*

In this position, power is not transmitted to the drive wheels and the transmission is locked. You can start the engine with the selector lever in this position.

Reverse

WARNINGS

Select reverse only when your vehicle is stationary and the engine is at idle speed.

Always come to a complete stop before shifting out of reverse.

Select reverse to allow the vehicle to move backwards.

Neutral

In this position, power is not transmitted to the drive wheels but the transmission is not locked. You can start the engine with the selector lever in this position.

Drive

Note: *A shift will occur only when the vehicle speed and the engine speed are appropriate.*

Note: *You may temporarily override the current gear selected using the + and - buttons.*

Select drive to shift automatically through the forward gears.

The transmission will select the appropriate gear for optimum performance based on ambient temperature, road gradient, vehicle load and driver input.

Sport mode and manual shifting

Sport Mode

Note: *In **Sport** mode the transmission operates as normal but gears are selected more quickly and at higher engine speeds.*

Note: *In **Sport** mode **S** will be displayed on the instrument panel.*

Activate **Sport** mode by moving the selector lever to position **S**. **Sport** mode will remain active until either you shift manually up or down the gears using **+** and **-**, or return the selector lever to position **D**.

Manual shifting

WARNING

Do not hold the buttons permanently in **–** or **+**.

CAUTION

The transmission will automatically downshift when the engine speed is too low.

Press the **-** button to shift down and press the **+** button to shift up.

Gears may be skipped by pressing the buttons repeatedly at short intervals.

Manual mode also provides a kickdown function. See **Kickdown**.

Hints on driving with an automatic transmission

CAUTION

Do not idle the engine for long periods of time in drive with the brakes applied.

Moving off

1. Release the parking brake.
2. Release the brake pedal and press the accelerator pedal.

Stopping

1. Release the accelerator pedal and press the brake pedal.
2. Apply the parking brake.
3. Select neutral or park.

Kickdown

Press the accelerator pedal fully with the selector lever in the drive position to select the next lowest gear for optimum performance. Release the accelerator pedal when you no longer require kickdown.

Emergency park position release lever

Use the lever to move the selector lever from the park position in the event of an electrical malfunction or if your vehicle has a flat battery.

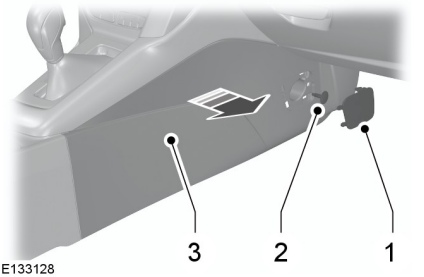

E133128

1. Carefully remove the cover.
2. Remove the retaining clip.
3. Remove the centre console side panel.

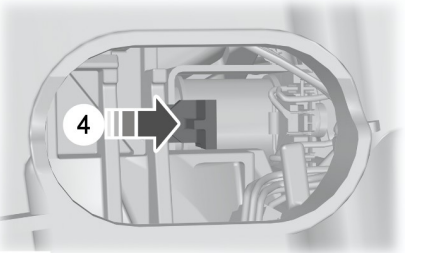

E133129

Note: *The lever is white.*

4. Apply the brake pedal. Using a suitable tool press and hold the lever forward while pulling the selector lever out of the park position and into the neutral position.

PRINCIPLE OF OPERATION

Note: *Depending on applicable laws and regulations in the country for which your vehicle was originally built, the brake lamps may flash if you brake heavily.*

Note: *Occasional brake noise is normal and often does not indicate a concern. In normal operation, the system may emit occasional or intermittent squeal or groan noises when the brakes are applied. Such noises are usually caused by environmental conditions such as cold, heat, moisture, road dust, salt or mud.*

Disc brakes

Wet brake discs result in reduced braking efficiency. Dab the brake pedal when driving from a car wash to remove the film of water.

ABS

WARNING

The ABS does not relieve you of your responsibility to drive with due care and attention.

The ABS helps you to maintain full steering and directional stability when you brake heavily in an emergency, by preventing the road wheels from locking.

HINTS ON DRIVING WITH ANTI-LOCK BRAKES

Note: *When the system is operating, the brake pedal will pulse and may travel further. Maintain pressure on the brake pedal. You may also hear a noise from the system. This is normal.*

The ABS will not eliminate the risks when:

- you drive too close to the vehicle in front of you
- the vehicle is aquaplaning
- you take corners too fast
- the road surface is poor.

PARKING BRAKE

WARNING

Vehicles with an automatic transmission should always be left with the selector lever in position **P (Park)**.

- Press the foot brake pedal firmly.
- Pull the parking brake lever up smartly to its fullest extent.
- Do not press the release button while pulling the lever up.
- If your vehicle is parked on a hill and facing uphill, select first gear or **P (Park)** and turn the steering wheel away from the kerb.
- If your vehicle is parked on a hill and facing downhill, select reverse gear or **P (Park)** and turn the steering wheel towards the kerb.

To release the parking brake, press the brake pedal firmly, pull the lever up slightly, depress the release button and push the lever down.

PRINCIPLE OF OPERATION

Electronic stability programme (ESP)

WARNING

ESP does not relieve you of your responsibility to drive with due care and attention.

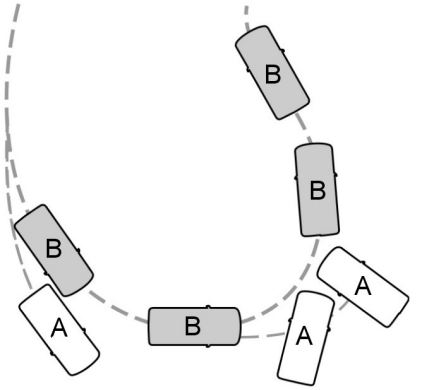

E72903

A without ESP
B with ESP

The ESP supports stability when the vehicle starts to slide away from your intended path. This is performed by braking individual wheels and reducing engine torque as needed.

The system also provides an enhanced traction control function by reducing engine torque and may brake individual wheels if they spin when you accelerate. This improves your ability to pull away on slippery roads or loose surfaces, and improves comfort by limiting wheel spin in hairpin bends.

Stability control (ESP) warning lamp

The ESP warning lamp will flash when the system is operating. See **Warning Lamps and Indicators** (page 74).

Emergency brake assist

WARNING

Emergency brake assist does not relieve you of your responsibility to drive with due care and attention.

Emergency brake assist will detect when you brake heavily by measuring the rate at which you press the brake pedal. It will provide maximum braking efficiency as long as you press the pedal. Emergency brake assist can reduce stopping distances in critical situations.

Trailer stability control

WARNING

Trailer stability control does not relieve you of your responsibility to tow with due care and attention.

Trailer stability control is an enhanced feature of ESP, and automatically detects when an attached trailer starts to sway.

If this situation occurs, the system will automatically brake individual wheels to stabilise the trailer and vehicle. In case a very severe sway is detected, the engine torque will be reduced and the vehicle will be slowed automatically.

USING STABILITY CONTROL

Note: *The system will be switched on automatically every time you switch the ignition on.*

To turn the system off and on. See **Information Displays** (page 79).

USING STABILITY CONTROL - 2.0L ECOBOOST SCTI (MI4)

WARNING

If you switch stability control off, active city stop will also be switched off.

Note: *The system will be switched on automatically every time you switch the ignition on.*

Note: *You can also turn the system off and on using the information display. See* ***General Information*** *(page 79).*

The switch is located in the instrument panel. See **At a Glance** (page 11).

Switching sport mode on

Note: *Stability control is only reduced and not switched off completely.*

Press the switch. You will see a message in conjunction with an illuminated icon in the display. Press the switch again to return the system to normal mode.

Switching the system off

Press and hold the switch for approximately five seconds. You will see a message in conjunction with an illuminated icon in the display.

PRINCIPLE OF OPERATION

The system makes it easier to pull away when the vehicle is on a slope without the need to use the parking brake.

When the system is active, the vehicle will remain stationary on the slope for a short time after you release the brake pedal. During this time, you have time to move your foot from the brake to the accelerator pedal and pull away. The brakes are released automatically once the engine has developed sufficient drive to prevent the vehicle from rolling down the slope. This is an advantage when pulling away on a slope, for example from a car park ramp, traffic lights or when reversing uphill into a parking space.

WARNING

The system does not replace the parking brake. When you leave the vehicle, always apply the parking brake and select first or reverse gear.

USING HILL START ASSIST

The system is activated automatically when you stop your vehicle on a slope greater than 3%. The system operates with the vehicle facing downhill if reverse gear is selected and with the vehicle facing uphill if any forward gear is selected.

Vehicles with manual transmission only

The system can be switched on and off using the information display. See **General Information** (page 79).

Activating the system

WARNINGS

You must remain in the vehicle once you have activated the system.

WARNINGS

At all times you are responsible for controlling the vehicle, supervising the system and intervening, if required.

If a malfunction is detected when the system is active, the system will be deactivated and a message will be shown in the display. See **Information Messages** (page 87).

You can activate the system only if the following conditions have been met:

- The engine is running.
- The system is switched on.
- On vehicles with manual transmission, the clutch pedal is pressed.
- No failure mode is present.

To activate the system:

1. Press the brake pedal to bring the vehicle to a complete standstill. Keep the brake pedal depressed.
2. If the sensors detect that the vehicle is on a slope the system will be activated automatically.
3. When you remove your foot from the brake pedal, the vehicle will remain on the slope without rolling away for a short time. This hold time will automatically be extended if you are in the process of driving off.
4. Drive off in the normal manner. The brakes will be released automatically.

Deactivating the system

To deactivate the system, perform **one** of the following:

- Wait for a short time until the system deactivates automatically.
- If a forward gear was selected when the system became active, select reverse gear.
- If reverse gear was selected when the system became active, select a forward gear.

PRINCIPLE OF OPERATION

WARNING

The system does not relieve you of your responsibility to drive with due care and attention.

CAUTIONS

Vehicles fitted with a trailer tow module not approved by us may not correctly detect obstacles.

The sensors may not detect objects in heavy rain or other conditions that cause disruptive reflections.

The sensors may not detect objects with surfaces that absorb ultrasonic waves.

The parking aid does not detect obstacles moving away from the vehicle. They will only be detected shortly after they start to move towards the vehicle again.

If you use a high pressure spray to wash your vehicle, only spray the sensors briefly from a distance not less than 20 centimetres (8 inches).

Parking aid sends tones via the audio system fitted and approved by us. If this is not working the parking aid system will not work.

Note: *On vehicles fitted with a tow ball arm, the rear parking aid is deactivated automatically when any trailer lamps (or lighting boards) are connected to the 13-pin socket via a trailer tow module we have approved.*

Note: *Keep the sensors free from dirt, ice and snow. Do not clean with sharp objects.*

Note: *The parking aid may emit false tones if it detects a signal using the same frequency as the sensors or if the vehicle is fully laden.*

Note: *The outer sensors may detect the side walls of a garage. If the distance between the outer sensor and the side wall remains constant for three seconds, the tone will switch off. As you continue, the inner sensors will detect rearward objects.*

PARKING AID - VEHICLES WITH: REAR PARKING AID

WARNING

The parking aid does not relieve you of your responsibility to drive with due care and attention.

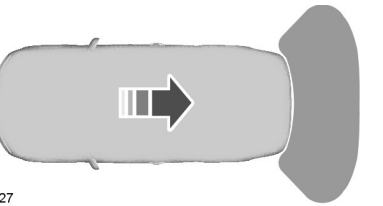

E77927

The parking aid is automatically activated when you select reverse gear with the ignition switched on.

You will hear an intermittent tone at a distance of approximately 150 centimetres (59 inches) between the obstacle and rear bumper and approximately 50 centimetres (20 inches) to the side. Decreasing the distance accelerates the intermittent tone.

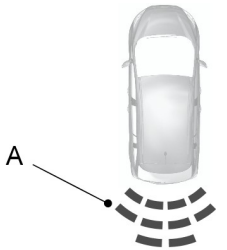

E130178

A Distance Indicator.

As the distance decreases the indicator moves towards the vehicle.

A continuous tone will start at a distance of less than 30 centimetres (11 inches) to the rear bumper.

Note: *On Vehicles with a tow bar fitted and approved by us the continuous tone will start at a distance of 45 centimetres (18 inches) from the rear bumper.*

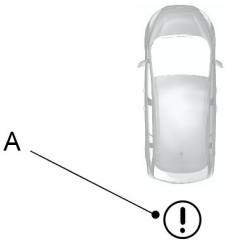

E130179

A Malfunction indicator.

Note: *If a malfunction is indicated the system will be disabled. Have the system checked by a properly trained technician.*

E130180

A trailer symbol indicates there is a trailer attached and the system is disabled.

PARKING AID - VEHICLES WITH: FRONT AND REAR PARKING AID

WARNING

The parking aid does not relieve you of your responsibility to drive with due care and attention.

Switching the parking aid on and off

The parking aid is per default off. To switch the parking aid on, select reverse gear or press the switch in the instrument panel. For item location: See **At a Glance** (page 11).

The light in the switch illuminates when the parking aid is activated.

To turn it off, press the switch again.

Manoeuvring with the parking aid

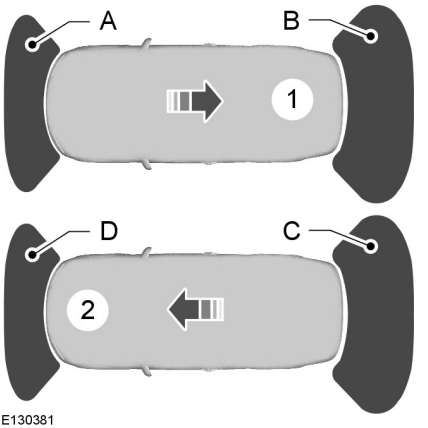

E130381

1	Reverse gear selected
2	Neutral or forward gear selected
A	Display and tone
B	Display and tone
C	Display only
D	Display and tone

You will hear an intermittent tone at a distance of approximately 150 centimetres (59 inches) between the obstacle and rear bumper, approximately 80 centimetres (31 inches) between the obstacle and front bumper and approximately 50 centimetres (20 inches) to the side. Decreasing the distance accelerates the intermittent tone. A continuous tone will start at a distance of less than 30 centimetres (11 inches) to the front or rear bumper.

Note: *On vehicles with a tow bar fitted and approved by us the continuous tone will start at a distance of 45 centimetres (18 inches) from the rear bumper.*

You will hear an alternating tone from the front and rear if obstacles are closer than 30 centimetres (11 inches) to the front and rear bumpers.

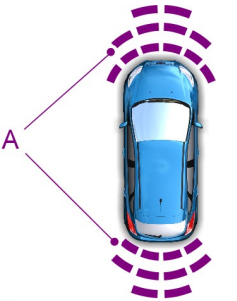

E130382

A	Distance Indicator.

As the distance decreases the indicator moves towards the vehicle.

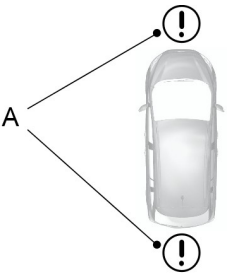

E130383

A	Malfuction indicator.

Note: *If a malfunction is indicated the system will be disabled. Have the system checked by a properly trained technician.*

E130180

A trailer symbol indicates there is a trailer attached and the rear sensors are disabled.

PRINCIPLE OF OPERATION

The camera is a visual aid for use when reversing.

WARNING

The system does not relieve you of your responsibility to drive with due care and attention.

CAUTIONS

If you use a high pressure spray to wash your vehicle, only spray the camera briefly from a distance not less than 20 centimetres (8 inches).

Do not apply pressure to the camera.

Note: *Keep the camera free from dirt, ice and snow. Do not clean with sharp objects, degreaser, wax or organic products. Use only a soft cloth.*

During operation, guide lines appear in the display which represent your vehicle's path and approximate distance from rearward objects.

REAR VIEW CAMERA

WARNINGS

The operation of the camera may vary depending on the ambient temperature, vehicle and road conditions.

The distances shown in the display may differ from the actual distance.

Do not place objects in front of the camera.

The camera is located on the luggage compartment lid near the handle.

E99105

Activating the rear view camera

CAUTION

The camera may not detect objects that are close to the vehicle.

With the ignition and the audio unit switched on:

1. Press the parking aid switch in the instrument panel. For item location: See **At a Glance** (page 11). Or,
2. Engage reverse gear.

The image is displayed on the screen.

The lamp in the switch illuminates when the system is activated.

The camera may not operate correctly in the following conditions:

- Dark areas.
- Intense light.
- If the ambient temperature increases or decreases rapidly.
- If the camera is wet, for example in rain or high humidity.
- If the camera's view is obstructed, for example by mud.

Using the display

CAUTIONS

Obstacles above the camera position will not be shown. Inspect the area behind your vehicle if necessary.

Marks are for general guidance only, and are calculated for vehicles in maximum load conditions on an even road surface.

The lines show a projected vehicle path (based on the current steering wheel angle) and the distance from the exterior mirrors and rear bumper.

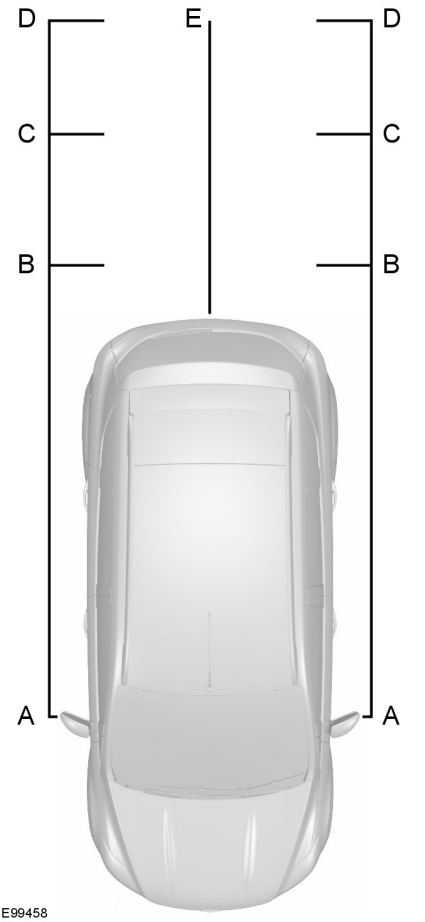

A Exterior mirror clearance - 0.1 metre (4 inches)

B Red - up to 0.3 (12 inches)

C Amber - 0.3 - 0.6 metre (12 - 24 inches)

D Green - 0.6 - 0.9 metre (24 - 35 inches)

E Amber - centre line of the projected vehicle path

Note: *The green line is extended from 0.9 metre (35 inches) up to a distance of 3.2 metres (126 inches).*

Note: *When reversing with a trailer, the lines on the screen are not shown. The camera will show the vehicle direction and not the trailer.*

Deactivating the rear view camera

Note: *Disengage reverse gear. The display will stay on for a short period before switching off.*

Note: *The system will automatically switch off once the vehicle speed has reached approximately 15 km/h (9 mph).*

Press the parking aid switch in the instrument panel. For item location: See **At a Glance** (page 11).

Vehicles with parking aid

The display will additionally show a coloured distance bar. This guide indicates the distance from the rear bumper to the detected obstacle.

These are colour coded as follows:

- Green - 0.6 to 1.8 metres (24 - 71 inches).
- Amber - 0.3 to 0.6 metre (12 - 24 inches).
- Red - 0.3 metre (12 inches) or less.

PRINCIPLE OF OPERATION

WARNINGS

The system does not relieve you of your responsibility to drive with due care and attention.

At all times you are responsible for controlling the vehicle, supervising the system and intervening if required.

You must observe that the selected space remains clear of obstructions at all times in the manoeuver.

Vehicles with overhanging loads, street furniture and other items may not be detected by the system. You must make sure that the selected space is suitable for parking.

Do not use the system if a trailer is attached to the vehicle.

Do not use the system if a bike rack is attached to the back of the vehicle.

Do not use the system if an overhanging item is attached to the roof.

If the manoeuvre is interrupted before completion, the system will be disabled. The steering wheel position will not indicate the true position of the steering and you will have to take control of the vehicle.

Make sure that loose clothing, your hands or your arms do not get caught in the rotating steering wheel.

The system will detect a suitable parallel parking space and steer the vehicle into the space. The system controls the steering while the driver controls the accelerator, transmission and brakes. The manoeuvre can be stopped at any time by holding the steering wheel or pressing the active park assist switch. See **At a Glance** (page 11).

The system will visually and audibly instruct the driver throughout the procedure to safely park the vehicle.

USING ACTIVE PARK ASSIST

CAUTIONS

The sensors may not detect objects in heavy rain or other conditions that cause disruptive reflections.

The sensors may not detect objects with surfaces that absorb ultrasonic waves.

The sensors may not detect the kerb.

Note: *If the traction control system is disabled active park assist will not be available. See* ***General Information*** *(page 79).*

The system will not align the vehicle correctly if:

- a spare tyre, or a tyre worn significantly more than the other tyres is used
- the factory installed tyre size is not used on the vehicle
- the tyres skid
- you allow the vehicle to roll
- the weather conditions are poor (heavy rain, snow, fog, etc).

Move forwards at a maximum speed of 30 km/h (18 mph). Press the active park assist switch. See **At a Glance** (page 11). Use the direction indicator lever to select searching either to the left-hand side or right-hand side of the vehicle.

Note: *If no selection is made via the direction indicator lever the system will default to the passenger side of the vehicle.*

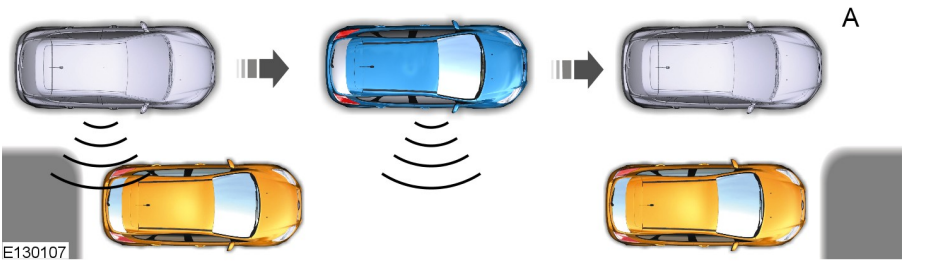

Note: *To disable the chimes: See **Personalised Settings** (page 86).*

The information and entertainment display will inform you and a chime will be heard when a suitable space is found. To park the vehicle, follow the instructions on the information and entertainment display.

Note: *The arrow symbols or graphics in the display indicate on which side of the vehicle the system will park. The display will also advise you when to select reverse gear.*

Slow down and stop at approximately position **A**, then follow the system instructions.

WARNING

If a speed of 10 km/h (6 mph) is exceeded the system will be disabled and you will need to take full control of the vehicle.

Move the vehicle backwards cautiously using the accelerator and brake pedals to control the vehicle. Parking aid warning tones will sound. Stop the vehicle when you hear a continuous tone.

You can take control of the manoeuvre by holding the steering wheel. A message may appear that the system can be resumed. To accept this message press the active park assist switch. See **At a Glance** (page 11).

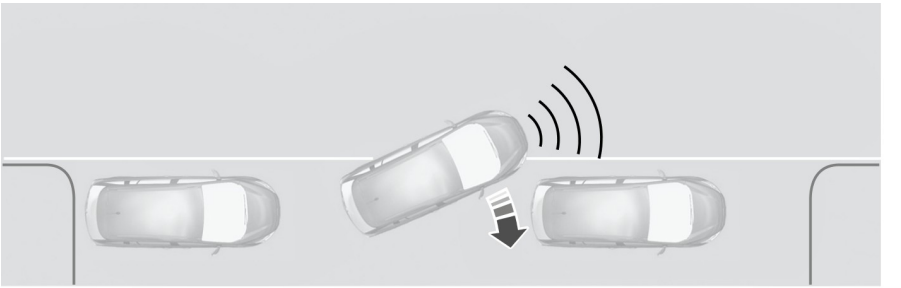

E130109

Move the vehicle forwards. Stop the vehicle when you hear a continuous tone.

Repeat the above steps until the vehicle is satisfactory parked. The display will indicate when the system has finished the manoeuvre.

PRINCIPLE OF OPERATION

WARNING

The system does not relieve you of your responsibility to drive with due care and attention.

Cruise control allows you to control your speed using the switches on the steering wheel. You can use cruise control when you exceed approximately 30 km/h (20 mph).

USING CRUISE CONTROL

WARNING

Do not use cruise control in heavy traffic, on twisty roads or when the road surface is slippery.

Switching cruise control on

E130072

Note: *The system is ready for you to set a speed.*

Setting a speed

Press the **SET+** switch or the **SET-** switch to store and maintain your current speed. The cruise control indicator will illuminate. See **Warning Lamps and Indicators** (page 74).

Changing the set speed

WARNING

When you are going downhill, your speed may increase above the set speed. The system will not apply the brakes. Change down a gear and press the **SET-** switch to assist the system in maintaining the set speed.

Note: *If you accelerate by pressing the accelerator pedal, the set speed will not change. When you release the accelerator pedal, you will return to the speed that you previously set.*

E130073

A Accelerate
B Decelerate

Cancelling the set speed

Press the brake pedal or pull the **CAN** switch.

Note: *The system will no longer control your speed. The cruise control indicator will not illuminate but the system will retain the speed that you previously set.*

Resuming the set speed

Pull the **RES** switch.

The cruise control indicator will illuminate and the system will attempt to resume the speed that you previously set.

Switching cruise control off

E130072

The system will not retain the speed that you previously set. The cruise control indicator will not illuminate.

PRINCIPLE OF OPERATION

WARNINGS

The system is not a collision warning or avoidance system. The separate forward alert function provides a collision warning and mitigation feature. See **Forward alert function** (page 161). You must intervene if the system does not detect a vehicle in front.

When driving you are responsible for maintaining the correct distance and speed, even when adaptive cruise control is used. You must always pay attention to the traffic conditions and intervene when adaptive cruise control is not maintaining a suitable speed or suitable distance.

The system does not relieve you of your responsibility to drive with due care and attention.

The system does not brake for slow or stationary vehicles, pedestrians, objects in the road, oncoming and crossing vehicles.

CAUTIONS

Only use adaptive cruise control when conditions are favourable, for example on motorways and main roads with steady free flowing traffic.

Do not use in poor visibility, specifically fog, heavy rain, spray or snow.

Do not use on icy or slippery roads.

Do not use the system when entering or leaving a motorway.

The radar sensor has a limited field of vision. In some situations it may detect a vehicle other than the one expected or not detect any vehicle at all.

Note: *When adaptive cruise control is activated, you may hear some unusual sounds during automatic braking. This is normal and caused by the automatic braking system.*

Note: *Keep the front of the vehicle free from dirt, metal badges or objects, including vehicle front protectors and additional lights which may prevent the sensor from operating.*

The system is designed to help you maintain a gap from the vehicle ahead or a set road speed if there is no slower vehicle ahead. The system is intended to provide enhanced operation of the vehicle when following other vehicles which are in the same lane and travelling in the same direction.

The system is based on the use of a radar sensor which projects a beam directly forward of the vehicle. This beam will detect any vehicle ahead within the system's range.

The radar sensor is mounted behind the front grille.

Detection beam issues

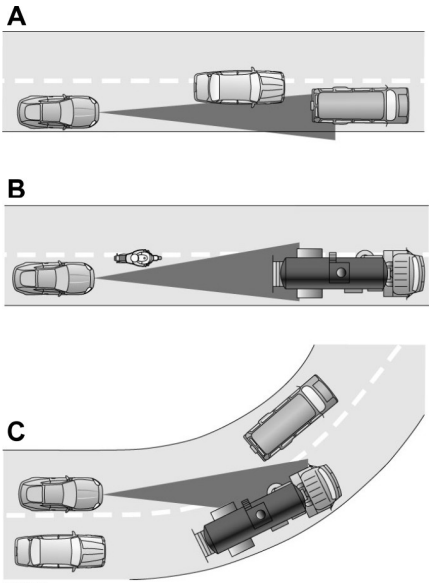

Detection issues can occur:

- With vehicles that edge into your lane that can only be detected once they have moved fully into your lane (**A**). Motorcycles may be detected late, or not at all. (**B**)
- With vehicles in front when going into and coming out of a bend (**C**). The detection beam will not follow sharp curves in the road.

In these cases the system may brake late or unexpectedly. You should stay alert and intervene if necessary.

Automatic braking with ACC

WARNINGS

You must take immediate action once alerted, as the adaptive cruise control braking will not be sufficient to keep a safe distance to the vehicle in front.

In some cases there may be no warning or the warning may be delayed. You should always apply the brakes when necessary.

When following a vehicle in front of you, adaptive cruise control will not automatically decelerate to a stop.

The system will automatically brake for you, if required to maintain the set gap between your vehicle and the one detected in front. This braking capacity is limited to approximately 30% of the total manual braking capacity to ensure smooth and comfortable cruising. If the car needs to brake more heavily than this, and you do not intervene by braking manually, an alarm will sound and a warning symbol will be displayed in the cluster.

USING ADAPTIVE CRUISE CONTROL

The system is operated by adjustment controls mounted on the steering wheel.

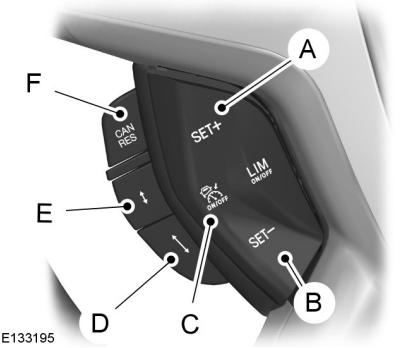

A	Set speed increase
B	Set speed decrease
C	ACC on/off
D	ACC gap increase
E	ACC gap decrease
F	ACC cancel/resume

Switching the system on

Press switch **C**. The system is set to standby mode.

Setting a speed

Note: *The system must be in standby mode.*

Press switch **A** or switch **B** to select your desired cruise speed. The speed is displayed in the information display and stored as the set speed.

Changing the set speed

Note: *Vehicle speed may be increased and decreased at intervals of 5 km/h or 5 mph.*

Note: *If the system does not react to these changes the reason may be that the gap interval to the vehicle in front prevents an increase in speed.*

Press switch **A** to increase or switch **B** to decrease the set speed until the desired set speed is shown in the information display. The vehicle speed will gradually change to the selected speed.

Setting the vehicle gap

CAUTION

Use the appropriate gap setting in accordance with local traffic regulations.

Note: *The gap setting is time dependent and therefore the distance will automatically adjust with your speed. For example on a gap setting of four bars, the time gap is 1.8 seconds. This will mean that at a speed of 100 km/h (62 mph), the distance to the vehicle in front will be maintained at 50 metres (164 feet).*

Note: *If the accelerator is depressed for a short period, for example when overtaking, the system is temporarily deactivated and then reactivated when the accelerator pedal is released. A message is displayed in the information display.*

Note: *The gap setting will remain unchanged during ignition cycles.*

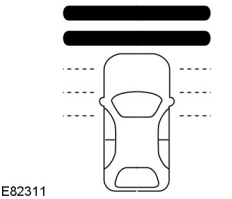

The distance between you and the vehicle detected in front is maintained by a variable setting. There are five steps which are represented by horizontal bars displayed in the information display. One bar indicates the smallest gap and five bars indicates the largest gap. These bars are shown empty when in standby mode and filled when in active mode.

If no vehicle is detected in front, then only your vehicle is displayed in the information display below the bars. The system will maintain the set speed when conditions permit. The set gap is maintained and displayed.

If a vehicle is detected by the sensor, the display will show another vehicle above the horizontal bars:

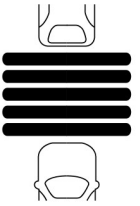
E82312

This is a follow mode, and the system will accelerate or decelerate as necessary to maintain the set gap.

Pull switch **E** to decrease the gap or switch **D** to increase the gap. The gap selected will be represented by the number of bars in the display.

Note: *The recommended gap setting is four or five bars.*

Temporarily deactivating the system

Note: *The system is cancelled when the gear lever is moved to a neutral position or if the accelerator pedal or clutch is depressed for a long period of time.*

Press the brake pedal or pull switch **F** to cancel the system. The system will return to standby mode allowing you full manual control of the vehicle. The set speed and gap setting are retained in the memory.

Pull switch **F** again to resume. The system will resume with the previously set speed and vehicle gap setting if conditions permit.

Switching the system off

Press switch **C** to turn the system off.

Note: *When deactivating the system by pressing switch **C**, the stored speed is not retained.*

Automatic deactivation

Note: *If the engine speed drops too low, a message is displayed in the information display instructing you to change down a gear (manual transmission only). If you do not follow this recommendation then the system will go into automatic deactivation mode.*

Note: *The system will not operate if traction control has been switched off.*

The system is dependent on various other safety systems, for example ABS and ESP. If any of these systems are malfunctioning or reacting to an emergency, the system is automatically deactivated.

In the event of automatic deactivation a signal will sound and the message is displayed in the information display. See **Information Messages** (page 87). You must then intervene and adapt your driving and speed to vehicles in front.

An automatic deactivation can be due to the:

- vehicle speed falling below 30 km/h (20 mph)
- wheels losing traction

- brake temperature being too high, for example when driving on mountainous or hilly roads
- engine speed being too low
- radar sensor being covered
- parking brake being applied.

FORWARD ALERT FUNCTION

WARNINGS

Never wait for a collision warning. When driving you are responsible for maintaining the correct distance and speed, even when the system is used.

The system will only react to vehicles in front travelling in the same direction and will not react to slow or stationary vehicles.

Never drive in a manner to provoke the system. The system is designed to assist in emergencies only.

CAUTIONS

Warnings may be triggered late, be absent or triggered unnecessarily due to detection beam issues. See **Principle of Operation** (page 157).

The system uses the same radar sensors as adaptive cruise control and therefore has the same limitations. See **Principle of Operation** (page 157).

Note: *The brake support system only reduces the collision speed if you brake immediately once alerted.*

Note: *If the brake pedal is depressed sufficiently quickly then braking is implemented with full brake function, even if the force on the pedal is light.*

Note: *Brake support prepares the brake system for rapid braking and the brakes are applied gently, which may be noticed as a slight jerk.*

Note: *The collision alerts will only occur if the system is switched on, however the brake support is always on and cannot be turned off.*

Note: *The system may be used with or without the Adaptive cruise control system being activated.*

The system assists you by warning of the risk of a collision with a vehicle in front.

The system alerts you by warning chimes and a visual warning in the information display. See **Information Messages** (page 87).

Brake support is activated to enable full braking effectiveness, and reduce the severity of a collision with the vehicle in front.

Switching the system on and off

Note: *When the system is switched off, a warning indicator will remain illuminated in the information display. See **Warning Lamps and Indicators** (page 74).*

Note: *The system status and settings will remain unchanged during ignition cycles.*

The system can be switched on and off using the information display. See **General Information** (page 79).

Adjusting the warning sensitivity

You may adjust the system warning sensitivity using the buttons on the steering wheel. See **General Information** (page 79). This controls how early the visual and audible warning is activated.

PRINCIPLE OF OPERATION

WARNING

When you are going downhill, your speed may increase above the set speed. The system will not apply the brakes but a warning will be given.

The system allows you to set a speed, to which the vehicle then becomes limited. The set speed will become the effective maximum speed of the vehicle, but with the option to temporarily exceed this limit if required.

USING THE SPEED LIMITER

Note: *The set speed limit can be intentionally exceeded for a short period if required, for example when overtaking.*

The system is operated by adjustment controls mounted on the steering wheel.

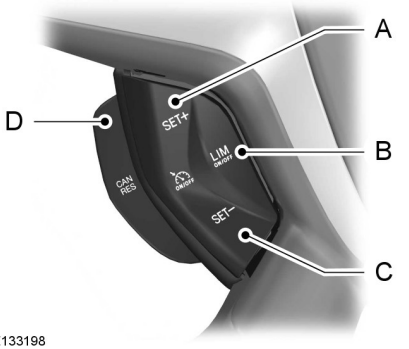

E133198

A Set speed increase
B Speed limiter on/off
C Set speed decrease
D Speed limiter cancel/resume

Switching the system on and off

Press switch **B**. The information display will prompt for a speed to be set.

Setting the speed limit

Use the cruise control switches to alter the maximum speed setting.

Press switch **A** or switch **C** to select your desired speed limit. The speed is displayed in the information display and stored as the set speed.

Pull switch **D** to cancel the limiter and place it in standby mode. The information display will confirm deactivation by showing the set speed crossed out.

Pull switch **D** again to resume the limiter. The information display will confirm the system is active by showing the set speed again.

Intentionally exceeding the set speed limit

Depress the accelerator fully to temporarily deactivate the system. The system will reactivate once the vehicle speed drops below the set speed.

System warnings

If the set limit is accidentally exceeded, for example driving downhill, the information display will show the set speed flashing together with an audible warning chime.

If the set limit is intentionally exceeded the information display will show the set speed crossed out.

PRINCIPLE OF OPERATION

WARNINGS

The system does not relieve you of your responsibility to drive with due care and attention.

At all times you are responsible for controlling the vehicle, supervising the system and intervening if required.

If the sensor becomes blocked the system may not function.

Take regular rest breaks as required and do not wait for the system to warn you if you feel tired.

Take rest breaks only where it is safe to do so.

Certain driving styles and behaviour may result in the system issuing a warning even if you are not feeling tired.

CAUTIONS

In cold and severe weather conditions the system may not function. Rain, snow, spray and large contrasts in lighting can all influence the sensor.

The system will not operate if the sensor cannot track the road lane markings.

The system may not operate in areas during roadworks construction.

The system may not operate on roads with sharp bends or narrow lanes.

Do not carry out windscreen repairs in the immediate area surrounding the sensor.

If your vehicle is fitted with a suspension kit not approved by us, the system may not function correctly.

Note: *Keep the windscreen free from obstructions such as bird droppings, insects and snow or ice.*

Note: *The system is intended as a driver aid when driving on fast main roads and motorways.*

Note: *The system calculates an alertness level at vehicle speeds above approximately 65 km/h (40 mph).*

The system automatically monitors your driving behaviour using various inputs including the front camera sensor.

If the system detects that you are becoming drowsy or there is a deterioration in your driving, the system will alert you.

USING DRIVER ALERT

Switching the system on and off

Note: *The system status will remain unchanged during ignition cycles.*

Activate the system using the information display. See **Information Displays** (page 79).

Once activated the system will calculate your alertness level based upon your driving behaviour in relation to the lane markings, and other factors.

System warnings

Note: *The system will not issue warnings below approximately 65 km/h (40 mph).*

The warning system is in two stages. At first the system issues a temporary warning that a rest should be taken. This message will only appear for a short time. If a rest is not then taken a further warning may be issued which will remain in the information display until cancelled. See **Information Messages** (page 87).

Press **OK** on the steering wheel control to remove the warning.

System display

When active the system will run automatically in the background and only issue warnings if required. You can view the status at any time using the information display. See **General Information** (page 79).

The alertness level is shown by six steps as a coloured bar.

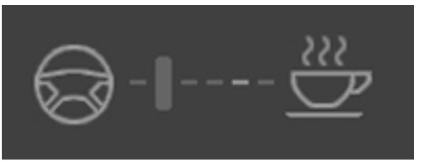

E131358

Alertness level is fine, no rest required.

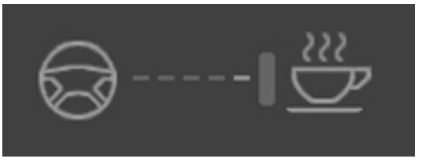

E131359

Alertness level is critical, indicating that a rest should be taken as soon as safely possible.

The status bar will travel from left to right as the calculated alertness level decreases. As the rest icon is approached the colour turns from green to yellow and then finally red when a rest break must be taken.

- Green - No rest required.
- Yellow - First (temporary) warning.
- Red - Second warning.

Note: *The alertness level will be shown in grey if the camera sensor cannot track the road lane markings or if the vehicle speed drops below approximately 65 km/h (40 mph).*

Resetting the system

You can reset the system by either:

- Switching the ignition off and on.
- Stopping the vehicle and then opening and closing the driver's door.

PRINCIPLE OF OPERATION

WARNINGS

The system does not relieve you of your responsibility to drive with due care and attention.

At all times you are responsible for controlling the vehicle, supervising the system and intervening if required.

If the sensor becomes blocked the system may not function.

Lane markings may not always be properly tracked by the sensor. Other structures or objects may sometimes be incorrectly detected as a lane marking, resulting in a false or missed warning.

CAUTIONS

In cold and severe weather conditions the system may not function. Rain, snow, spray and large contrasts in lighting can all influence the sensor.

The system will not operate if the sensor cannot track the road lane markings.

The system may not operate in areas during roadworks construction.

The system may not operate on roads with sharp bends or narrow lanes.

Do not carry out windscreen repairs in the immediate area surrounding the sensor.

If your vehicle is fitted with a suspension kit not approved by us, the system may not function correctly.

Note: *Keep the windscreen free from obstructions such as bird droppings, insects and snow or ice.*

Note: *The system is intended as a driver aid when driving on fast main roads and motorways.*

Note: *The system may not operate during hard braking or acceleration and, when you are intentionally steering the vehicle.*

Note: *The system will operate with a minimum of one tracked lane marking.*

Note: *The system will only operate above vehicle speeds of approximately 65 km/h (40 mph).*

A sensor is mounted behind the interior rear view mirror. It continuously monitors conditions to alert you of unintentional lane drifting at high speeds.

The system will automatically detect and track the lane markings on the road. If it detects that the vehicle is unintentionally drifting towards the lane boundaries then a visual warning will be displayed in the information display. There is also a warning given in the form of a vibration felt through the steering wheel.

USING LANE DEPARTURE WARNING

Switching the system on and off

Note: *When the system is switched off, a warning indicator will remain illuminated in the information display. See* ***Warning Lamps and Indicators*** *(page 74).*

Note: *The system status and settings will remain unchanged during ignition cycles.*

E132099

Activate and deactivate the system using the button on the indicator stalk.

Press the button to turn the system off. Press the button twice to turn the system on.

Setting the steering wheel vibration level

The system has three intensity levels which can be set using the information display. See **General Information** (page 79).

Setting the system sensitivity

You can adjust how quickly the system warns you of a dangerous situation. The system has two sensitivity levels which can be set using the information display. See **General Information** (page 79).

System warnings

E132651

A column of lane markings is displayed either side of the vehicle graphic.

The lane markings are colour coded as follows:

- Green - The system is ready to warn you of any unintentional lane departure.
- Red - The vehicle is approaching or is too close to the detected lane boundary. Take immediate safe action to reposition the vehicle.
- Grey - The relevant lane boundary will be suppressed.

Instances where a lane boundary may be suppressed:

- Lane markings on the road may not be detected by the sensor.
- The direction indicator for that side of the vehicle is on.
- During hard acceleration and braking, or if direct steering is applied.
- Vehicle speed is outside the operating limits
- If there is an ABS or Stability Control (ESP) intervention.
- Narrow lane width.

If the lane markings turn red or a vibration is felt through the steering wheel you must take immediate and safe action to align the vehicle and correct any unintended lane drift.

PRINCIPLE OF OPERATION

WARNINGS

The system does not relieve you of your responsibility to drive with due care and attention.

At all times you are responsible for controlling the vehicle, supervising the system and intervening if required.

If the sensor becomes blocked the system may not function.

Lane markings may not always be properly tracked by the sensor. Other structures or objects may sometimes be incorrectly detected as a lane marking, resulting in a false or missed warning in conjunction with a false or missed steering intervention.

Always have your hands on the steering wheel in case you need to overrule the system.

CAUTIONS

In cold and severe weather conditions the system may not function. Rain, snow, spray and large contrasts in lighting can all influence the sensor.

The system will not operate if the sensor cannot track the road lane markings.

The system may not operate in areas during roadworks construction.

The system may not operate on roads with sharp bends or narrow lanes.

Do not carry out windscreen repairs in the immediate area surrounding the sensor.

If your vehicle is fitted with a suspension kit not approved by us, the system may not function correctly.

Note: *Keep the windscreen free from obstructions such as bird droppings, insects and snow or ice.*

Note: *The system is intended as a driver aid when driving on fast main roads and motorways.*

Note: *The system may not operate during hard braking or acceleration and when you are intentionally steering the vehicle.*

Note: *The system will operate with a minimum of one tracked lane marking.*

Note: *The system will only operate between vehicle speeds of approximately 65 km/h (40 mph) and 180 km/h (112 mph).*

Note: *If the system does not detect an active steering input by the driver it will be temporarily deactivated until you resume control. The system alerts you with a warning chime and a message in the display.*

A sensor is mounted behind the interior rear view mirror. It continuously monitors conditions to alert you of unintentional lane drifting at high speeds.

The system will automatically detect and track the lane markings on the road. If it detects that the vehicle is unintentionally drifting towards the lane boundaries then a visual warning will be displayed in the information display. The system will also automatically apply a steering torque to correct the vehicle path. If the system is unable to correct the vehicle path a lane departure warning will be given. See **Using lane departure warning** (page 165).

USING THE LANE KEEPING AID

Switching the system on and off

Note: *The system is per default off.*

Note: *When the system has been switched on, lane departure warning is per default on.*

E132099

Activate and deactivate the system using the button on the indicator stalk.

Press the button three times to switch the system on. Press the button again to turn the system off.

System warnings

E132651

A column of lane markings is displayed either side of the vehicle graphic.

The lane markings are colour coded as follows:

- Green - The system is ready to intervene if an unintentional lane departure may occur.
- Yellow - The system will automatically apply a steering torque to align the vehicle path and correct any unintended lane drift.
- Red - The vehicle is approaching or is too close to the detected lane boundary. A warning is given in the form of a vibration felt through the steering wheel. Take immediate safe action to reposition the vehicle.
- Grey - The relevant lane boundary will be suppressed.

Instances where a lane boundary may be suppressed:

- Lane markings on the road may not be detected by the sensor.
- The direction indicator for that side of the vehicle is on.
- During hard acceleration and braking, or if direct steering is applied.
- Vehicle speed is outside the operating limits
- If there is an ABS or Stability Control (ESP) intervention.
- Narrow lane width.

Note: *The system can be overridden at any time during its operation by turning the steering wheel.*

PRINCIPLE OF OPERATION

WARNINGS

The system does not relieve you of your responsibility to drive with due care and attention.

At all times you are responsible for controlling your vehicle, supervising the system and intervening if required.

If the sensor becomes blocked the system may not function.

Note: *In cold and severe weather conditions the system may not function. Rain, snow, spray and large contrasts in lighting can all prevent the sensor from functioning correctly.*

Note: *Do not carry out windshield repairs in the immediate area surrounding the sensor.*

Note: *If your vehicle has a suspension kit not approved by us, the system may not function correctly.*

Note: *Always fit Ford original parts when replacing headlamp bulbs. Other bulbs may reduce system performance.*

Note: *Keep the windshield free from obstructions such as bird droppings, insects and snow or ice.*

Note: *The system may not detect all traffic signs and may read signs incorrectly.*

Note: *The system is designed to automatically detect traffic signs meeting the Vienna convention.*

There is a sensor mounted behind the interior rear view mirror. It continuously monitors road signs to inform you of the current speed limit and overtaking regulations.

The system automatically detects recognisable traffic signs, such as:

- Speed limit signs.
- No overtaking sings.
- Speed limit cancellation signs.

When the system recognises a traffic sign, it will be shown in the display.

USING TRAFFIC SIGN RECOGNITION

Switching the System On and Off

Note: *The system status and settings will remain unchanged during ignition cycles.*

You can switch the system on and off using the information display. See **General Information** (page 79).

Setting the System Speed Warning

The system has a number of speed warning levels which can be set using the information display. See **General Information** (page 79).

System Display

E132994

The system can display two traffic signs in parallel.

You can view the status at any time using the information display.

The system display is in four stages as follows:

1. All new recognizable traffic signs will appear brighter than the other traffic signs in the display.
2. After a predetermined time they will be shown normally.
3. After a predetermined distance they will be shown greyed out.
4. After another predetermined distance they will be deleted.

If the system detects a supplementary traffic sign, this sign is indicated as a box below the respective traffic sign. For example, when passing a reduced speed limit in wet road conditions sign.

PRINCIPLE OF OPERATION

WARNINGS

The system does not relieve you of your responsibility to drive with due care and attention.

At all times you are responsible for controlling the vehicle, supervising the system and intervening if required.

Never look directly into the sensor with any type of object, there is a risk of eye injury.

If the sensor becomes blocked the system may not function.

To achieve full system performance, the brake system needs to be bedded in. See **Running-In** (page 186).

The system performance may vary depending on the vehicle and road conditions.

The system will not react to vehicles driving in a different direction.

The system will not react to bicycles, motorcycles, people or animals.

When the ignition is on the sensor will constantly transmit a laser beam.

The system will not operate during harsh acceleration and steering.

In cold and severe weather conditions the system may not function. Rain, snow, spray and ice can all influence the sensor.

Do not carry out windscreen repairs in the immediate area surrounding the sensor.

If your vehicle is fitted with a windscreen not approved by us, the system may not function correctly.

WARNINGS

If the engine stops after the system has been activated, the hazard warning flashers will be activated.

The system may not function when driving around sharp curves.

Note: *Keep the windscreen free from obstructions such as bird droppings, insects and snow or ice.*

Note: *Keep the bonnet free of ice and snow, otherwise the system may not function correctly.*

A sensor is mounted behind the interior rear view mirror. It continuously monitors conditions to decide when to intervene.

The system is designed to help you reduce low speed collisions into the rear of another vehicle. It will also help you reduce the impact damage or potentially avoid the collision completely.

The system operates at speeds below approximately 30 km/h (19 mph) by applying the brakes when the sensor detects that a collision is likely.

You must depress the brake pedal to obtain full braking force.

When the system is braking or has automatically applied the brakes, a message will be shown in the display.

For laser sensor information and data: See **Type approvals** (page 334).

USING ACTIVE CITY STOP

WARNING

Never look directly into the sensor with any type of object, there is a risk of eye injury.

Switching the system on and off

Note: *The system automatically turns on every time you switch the ignition on.*

In certain situations it is advisable to disable the system, for example:

- Driving off road when objects may cover the windshield.
- Driving through a car wash facility.

You can switch the system on and off using the information display. See **General Information** (page 79).

USING ACTIVE CITY STOP - 2.0L ECOBOOST SCTI (MI4)

WARNINGS

Never look directly into the sensor with any type of object, there is a risk of eye injury.

If you switch stability control off, active city stop will also be switched off. A message will be shown in the display.

Switching the system on and off

Note: *The system is per default on.*

Note: *In certain situations, it may be advisable to disable the system, for example driving off road when objects may cover the windscreen.*

Activate and deactivate the system using the information display. See **General Information** (page 79).

GENERAL INFORMATION

WARNINGS

Use load securing straps to an approved standard, e.g. DIN.

Make sure that you secure all loose items properly.

Place luggage and other loads as low and as far forward as possible within the luggage or loadspace.

Do not drive with the tailgate or rear door open. Exhaust fumes may enter the vehicle.

Do not exceed the maximum front and rear axle loads for your vehicle. See **Vehicle identification** (page 237).

Heavy loads, when placed in the passenger compartment, should be on folded rear seats as shown. See **Rear Seats** (page 115).

CAUTIONS

Do not allow items to contact the rear windows.

Do not use any abrasive materials to clean the interior of the rear windows.

Do not install stickers or labels to the interior of the rear windows.

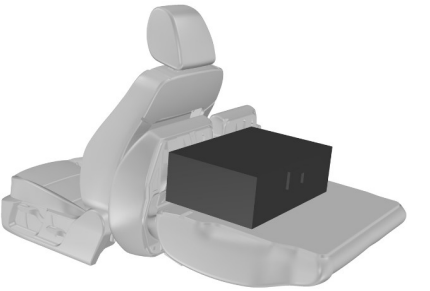

E97377

LUGGAGE ANCHOR POINTS

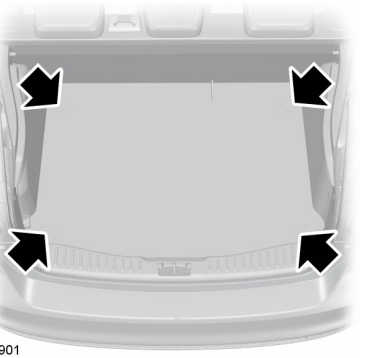

E132901

Lift the flap to access the anchor point.

LUGGAGE COVERS

WARNING

Do not place objects on the luggage cover.

3-door and 5-door

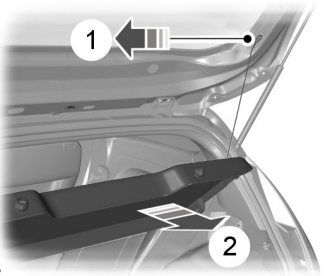

E72512

Estate

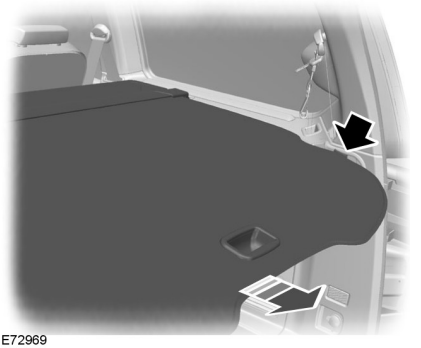

E72969

Pull out the cover and secure it in the retaining points.

Release it from the retaining points and let it roll back into the case. Clip the retaining hook onto the case.

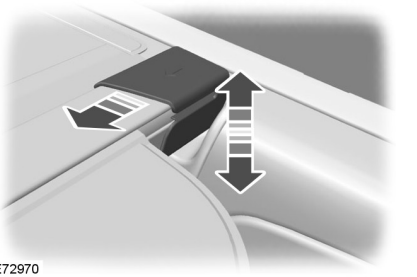

E72970

CARGO NETS

Luggage retention net

WARNING

On Estate vehicles, luggage retention net anchor points are not fitted behind the first row seats, but are fitted behind the second row seats.

To install the cargo retention net cassette:

Remove the luggage cover.

Push the sliders on the cassette towards each other and insert the telescopic bar into the holes on the sidewall behind the rear seatbacks.

Ensure that the end caps with the anti-rotation pin are correctly fitted in the side trim.

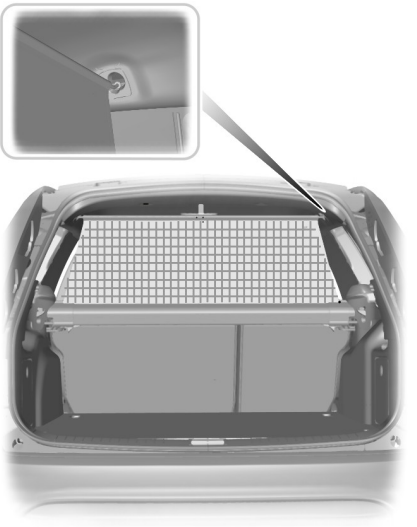

E78834

Pull up the net and insert the ends of the bar into the retainers on the roof.

Ensure that the bar is pushed forwards into the narrow section of the retainers.

WARNING

After installing the cassette, press the front edge of the luggage cover back down into its original position (forwards) to prevent vision out of the rear screen being obscured.

Reinstall the luggage cover.

Remove in the reverse order.

Cargo net

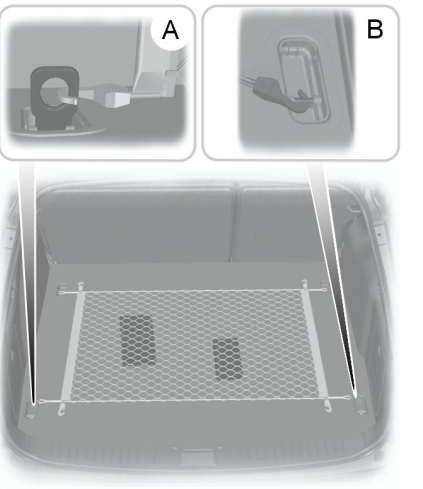

E78835

A With retaining rings

B Without retaining rings

The cargo net can be used to prevent objects sliding around.

Attach the hooks at each corner of the net to the four retaining points on the load floor.

DOG GUARD

CAUTION

Keep a distance of at least one centimetre between the dog guard and the seats in front of it.

Installing behind the front seats

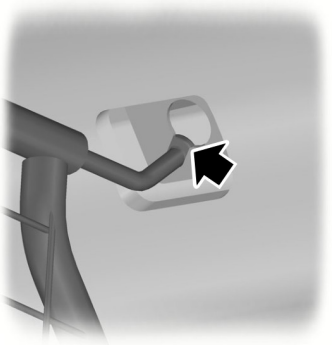

E86848

1. Push the ends of the bar on the grille towards each other and insert them into the retainers on the roof. Push the bar forwards into the narrow section of the retainers.

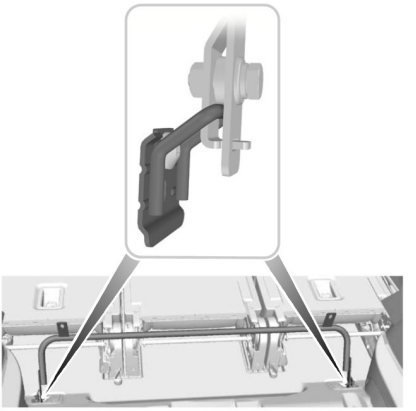

E87782

2. Attach the dog guard to the lower anchor points. Do not tighten the screws.

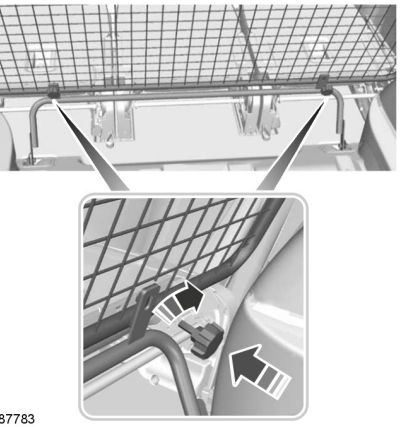

E87783

3. Attach the grille to the lower bar with the handwheels. Do not tighten the handwheels.
4. Tighten the screws at the lower anchor points.
5. Tighten the handwheels.

Installing behind the rear seats

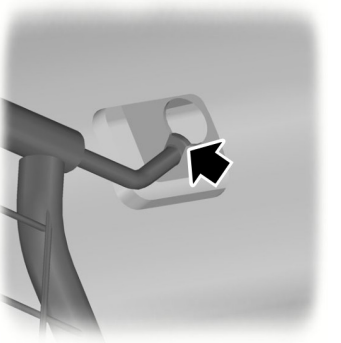

E86848

1. Push the ends of the bar on the grille towards each other and insert them into the retainers on the roof. Push the bar forwards into the narrow section of the retainers.

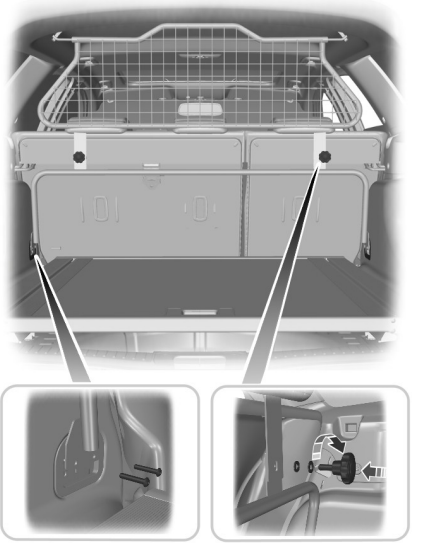

E104424

2. Remove two screws from both the luggage anchor points. See **Luggage Anchor Points** (page 173).
3. Attach the lower bar to the grille with the handwheels. Do not tighten the handwheels.
4. Attach the dog guard lower bar to the luggage anchor points, secure with the new supplied screws.
5. Tighten the handwheels.

Remove in the reverse order.

ROOF RACKS AND LOAD CARRIERS

Roof rack

WARNINGS

If you use a roof rack, the fuel consumption of your vehicle will be higher and you may experience different driving characteristics.

On vehicles with a 2.0L EcoBoost SCTi (MI4) engine, do not switch stability control off or select sport mode if you use a roof rack.

Read and follow the manufacturer's instructions when you are fitting a roof rack.

Do not exceed the maximum permissible roof load of 75 kilogrammes (165 pounds) (including the roof rack).

Check the security of the roof rack and tighten its fittings as follows:

- Before starting.
- After driving 50 kilometres (30 miles).
- At 1000 kilometres (600 miles) intervals.

To reduce fuel consumption, cross rails should be removed when not in use.

Installing the crossbars

WARNINGS

Distribute the load evenly over the loading area and keep the centre of gravity as low as possible. Secure the load well to prevent it from slipping. Never place any loads directly onto the roof surface.

Remove the crossbars before entering an automatic car wash.

Note: *The side mounting tracks are designed such that crossbars (for bicycle carriers, ski carriers etc.) from the Ford accessories range can be fitted.*

Note: *Before installing the crossbars, clean the side mounting tracks with water and a sponge.*

Note: *Position the crossbars as shown.*

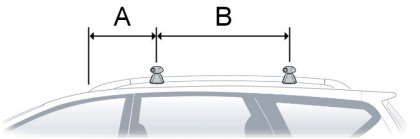

E135136

A 515 mm (20 inches)
B 750 mm (30 inches)

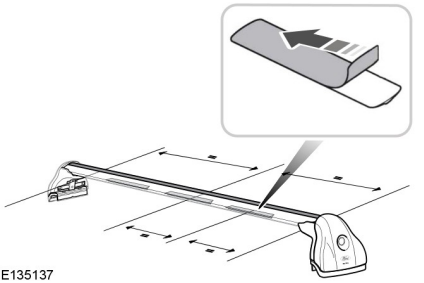

E135137

Note: *Adhesive pads are supplied to help reduce the buffeting noise.*

Note: *Make sure the surface of the crossbars is clean before attaching the adhesive pads.*

1. Remove the backing and attach the adhesive pads to the crossbars in the positions shown.

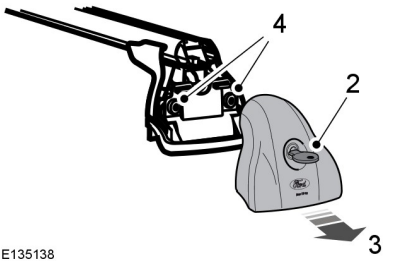

E135138

2. Insert the key. Turn the key anti-clockwise.
3. Remove the cover.
4. Loosen the screws.

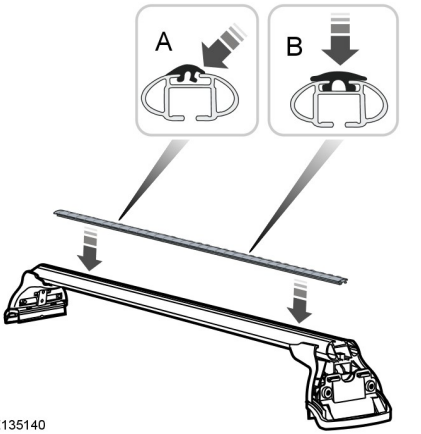

E135140

5. Install rubber strips in the positions shown.

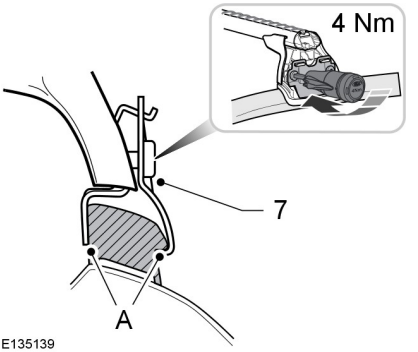

E135139

Note: *Make sure there is no gap between crossbar and rail* ***(A)*** *.*

6. Install the crossbars.
7. Tighten the screws until you hear a distinct click.
8. Install the cover. Turn the key clockwise to lock.
9. Remove the key.

Installing a roof box

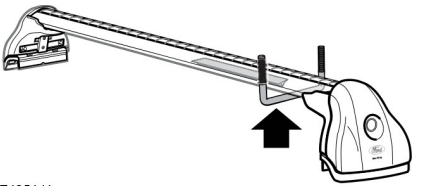

E135141

Make sure the adhesive pads are not in contact with the installation bolt.

TOWING A TRAILER

WARNINGS

The Focus ECOnetic is not approved for trailer towing.

Do not exceed 100 km/h (62 mph).

The rear tyre pressures must be increased by 0.2 bar (3 psi) above specification. See **Technical Specifications** (page 232).

Do not exceed the maximum gross train weight stated on the vehicle identification plate. See **Vehicle identification** (page 237).

Do not exceed the maximum permissible nose weight, i.e. vertical weight on the tow ball, of 75 kilogrammes (165 pounds).

Note: *We recommend you purchase a towing kit from your dealer. Failure to do so may result in damage to the engine.*

Note: *Not all vehicles are suitable or approved to have tow bars fitted. Check with your dealer first.*

Place loads as low and central to the axle(s) of the trailer as possible. If you are towing with an unladen vehicle, the load in the trailer should be placed toward the nose, within the maximum nose load, as this gives the best stability.

The stability of the vehicle to trailer combination is very much dependant on the quality of the trailer.

In high altitude regions above 1000 metres (3281 feet), the stipulated maximum permitted gross train weight must be reduced by 10% for every additional 1000 metres (3281 feet).

Steep gradients

WARNING

The overrun brake on a trailer is not controlled by ABS.

Change down a gear before you reach a steep downhill gradient.

TOWING A TRAILER - 2.0L ECOBOOST SCTI (MI4)

WARNING

Your vehicle is not approved for trailer towing.

RETRACTABLE TOW BALL

WARNINGS

You will hear a warning tone when the tow ball arm is not in one of the locked positions. The warning tone will switch off after 30 seconds. If you do not hear the tone when moving the tow ball arm or at system activation, do not use the tow bar and have it checked by a properly trained technician.

Only move the tow ball arm with your hand. Never use your foot or auxiliary tools as damage to the mechanism may result.

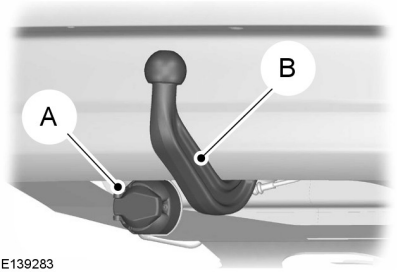

E139283

A 13-pin trailer socket A is provided underneath the rear bumper next to the tow ball arm B.

Releasing the tow ball arm

WARNING

Do not touch the tow ball arm during the release process.

Note: *If the release process is interrupted, for example an obstacle in the way or loss of power supply, the system will need to be reset. To reset the system, repeat the release process.*

Note: *The lamp in the switch illuminates when the system is activated.*

The following conditions must be met before releasing the tow ball arm:

- The luggage compartment lid must be open.
- The ignition must be switched off.
- No plug must be attached to the 13-pin trailer socket.
- The battery voltage must be greater than 11 volts.

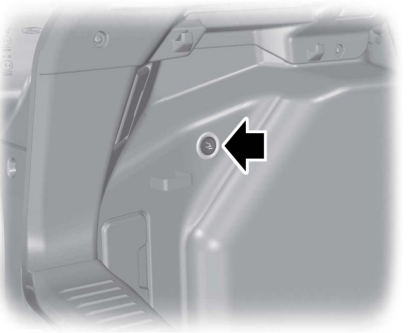

E132909

1. Press the button until it illuminates to activate the system.
2. Press the button again within four seconds to release the tow ball arm.

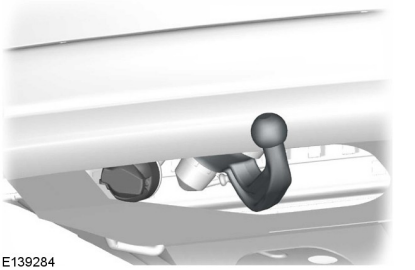

E139284

The tow ball arm automatically swivels into the lowered position.

If the tow ball arm fails to release, press the button again for 15 seconds.

WARNING

If it still fails to release, do not use the tow bar and have it checked by a properly trained technician.

Swivelling the tow ball arm out

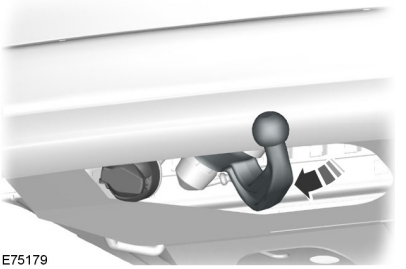
E75179

Move the tow ball arm to the operating position. The tow ball arm automatically locks in the operating position. The locking process is clearly audible and the warning tone will stop.

Swivelling the tow ball arm in

WARNING

Before swivelling the tow ball arm in, always unhitch the trailer or dismantle load carriers and their attachments. Dismantle attachments for tracking stabilization. Remove the plug for the trailer power supply and the adapter from the socket. Failure to do so may result in damage to the bumper.

1. Release the tow ball arm. See releasing the tow ball arm.

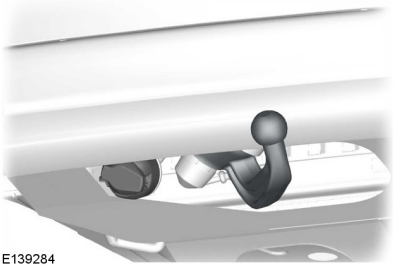
E139284

2. The tow ball arm automatically swivels into the lowered position.

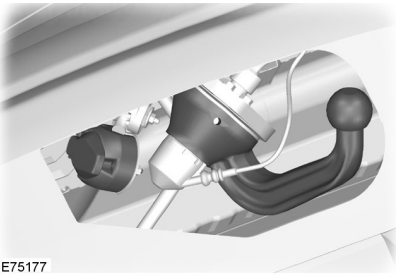
E75177

3. Move the tow ball arm to the stop in the stowed position. The tow ball arm automatically locks in the stowed position. The locking process is clearly audible and the warning tone will stop.

Fault conditions

If the tow ball arm release button is illuminated or you hear a warning tone when the ignition switch is in position II, repeat the release process.

If you pull on the tow ball arm during the release process, the system will stop moving to prevent an overload condition. To reset the system, press the release button for 15 seconds.

Driving with a trailer

WARNINGS

In the event of a vehicle breakdown, disconnect the trailer before towing the vehicle.

If any of the conditions below cannot be met, do not use the tow bar and have it checked by a properly trained technician.

Before starting your journey, make sure that the tow ball arm is properly locked. Check that:

- there is no warning tone when the locking procedure has been completed
- the tow ball arm is locked. It must not move when jerked.

Maintenance

WARNINGS

The towing hitch and control unit are maintenance-free. Do not grease or oil them.

Only the manufacturer should carry out repairs or dismantle the towing hitch.

If you use a high pressure spray to wash your vehicle, do not direct the spray onto the swivel joint of the tow ball arm.

TOW BALL

WARNINGS

When not in use, always transport the tow ball arm securely fastened in the luggage compartment.

Take special care when fitting the tow ball arm as the safety of the vehicle and the trailer depends on this.

Do not use any tools for mounting or dismounting the tow ball arm. Do not modify the trailer coupling. Do not disassemble or repair the tow ball arm.

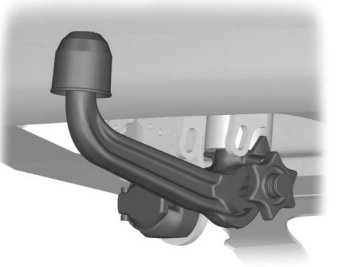

E71328

A 13-pin trailer socket and the tow ball arm seat are provided underneath the rear bumper. Turn the trailer socket down through 90 degrees until it engages in the end position.

Unlocking the tow ball arm mechanism

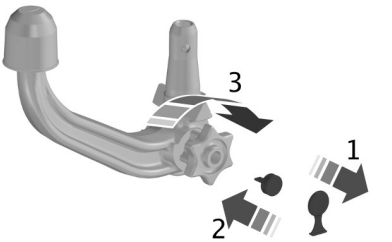

E71329

1. Remove the protecting cap (**1**). Insert the key and turn it clockwise to unlock (**2**).
2. Hold the tow ball arm. Pull the handwheel out and turn it clockwise until it clicks (**3**).
3. The red mark on the handwheel must align with the green mark on the tow ball.
4. Release the handwheel. The tow ball arm is unlocked.

Inserting the tow ball arm

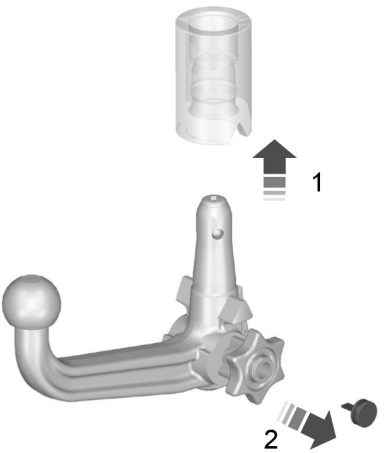

E71330

WARNING

The tow ball arm may only be inserted when completely unlocked.

1. Pull out the plug.
2. Insert the tow ball arm vertically and press it upwards until it engages (**1**). Do not hold your hand near the handwheel.
3. The green mark on the handwheel must align with the green mark on the tow ball.
4. To lock, turn the key anti-clockwise and remove the key (**2**).
5. Pull the protecting cap from the key bow and press it onto the lock.

Driving with a trailer

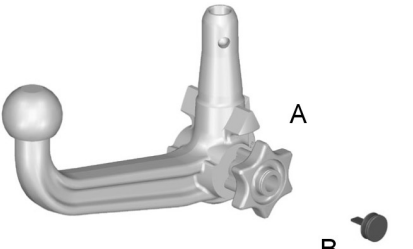

E71331

WARNING

If any of the below conditions cannot be met, do not use the tow bar and have it checked by a properly trained technician.

Before starting your journey, make sure that the tow ball arm is properly locked. Check that:

- the green marks are aligned
- the handwheel (**A**) is correctly fitted to the tow ball arm
- you have removed the key (**B**)
- the tow ball arm is securely positioned. It must not move when jerked.

Removing the tow ball arm

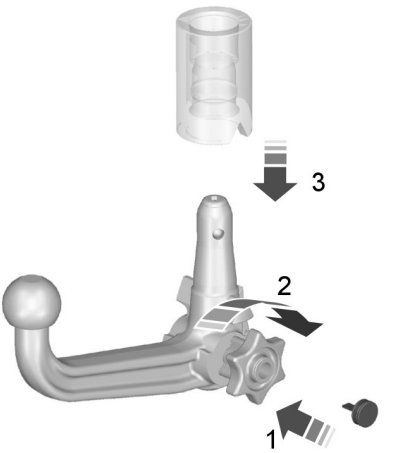

E71332

1. Unhitch the trailer.
2. Remove the protecting cap. Press the cap into the key bow. Insert the key and unlock (**1**).
3. Hold the tow ball arm. Pull the handwheel out, turn it clockwise against the stop (**2**) and remove the tow ball arm (**3**).
4. Release the handwheel.

When unlocked in this way, the tow ball arm can be reinserted at any time.

Driving without a trailer

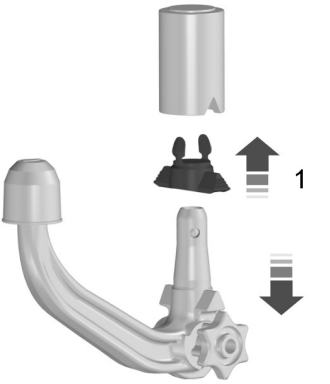

E94771

1. Remove the tow ball arm.
2. Insert the plug into its seat (**1**).

WARNING

Never unlock the tow ball arm with the trailer attached.

Maintenance

WARNING

Remove the tow ball arm and protect the seat with the plug before steam cleaning your vehicle.

Keep the system clean. Periodically lubricate bearings, sliding surfaces, and locking balls with resin-free grease or oil and the lock with graphite.

In case of loss, replacement keys are available from the manufacturer by stating the number on the lock cylinder.

RUNNING-IN

Tyres

WARNING

New tyres need to be run-in for approximately 500 kilometres (300 miles). During this time, you may experience different driving characteristics.

Brakes and clutch

WARNING

Avoid heavy use of the brakes and clutch if possible for the first 150 kilometres (100 miles) in town and for the first 1500 kilometres (1000 miles) on motorways.

Engine

CAUTION

Avoid driving too fast during the first 1500 kilometres (1000 miles). Vary your speed frequently and change up through the gears early. Do not labour the engine.

COLD WEATHER PRECAUTIONS

The functional operation of some components and systems can be affected at temperatures below -30ºC (-22ºF).

DRIVING THROUGH WATER

Driving through water

CAUTIONS

Drive through water in an emergency only, and not as part of normal driving.

Engine damage can occur if water enters the air filter.

In an emergency, the vehicle can be driven through water to a maximum depth of 200 millimetres (8 inches) and at a maximum speed of 10 km/h (6 mph). Extra caution should be exercised when driving through flowing water.

When driving in water, maintain a low speed and do not stop the vehicle. After driving through water, and as soon as it is safe to do so:

- Depress the brake pedal lightly and check that full brake function is achieved.
- Check that the horn works.
- Check that the vehicle's lights are fully operational.
- Check the power assistance of the steering system.

FLOOR MATS

E142666

WARNINGS

Always use floor mats that are designed to fit the foot well of your vehicle. Only use floor mats that leave the pedal area unobstructed. Only use floor mats that are firmly secured to retention posts so that they cannot slip out of position and interfere with the pedals or impair safe operation of your vehicle in other ways.

WARNINGS

Pedals that cannot move freely can cause loss of vehicle control and increase the risk of serious personal injury.

Always make sure that the floor mats are properly attached to the retention posts in the carpet that are supplied with your vehicle. Floor mats must be properly secured to both retention posts to ensure mats do not shift out of position.

Never place floor mats or any other covering in the vehicle foot well that cannot be properly secured to prevent them from moving and interfering with the pedals or the ability to control the vehicle.

Never place floor mats or any other covering on top of already installed floor mats. Floor mats should always rest on top of vehicle carpeting surface and not another floor mat or other covering. Additional floor mats or any other covering will reduce the pedal clearance and potentially interfere with pedal operation.

Check attachment of floor mats on a regular basis. Always properly reinstall and secure floor mats that have been removed for cleaning or replacement.

Always make sure that objects cannot fall into the driver foot well while the vehicle is moving. Objects that are loose can become trapped under the pedals causing a loss of vehicle control.

Failure to properly follow floor mat installation or attachment instructions can potentially cause interference with pedal operation causing loss of control of vehicle.

To install floor mats, position the floor mat so that the eyelet is over the retention post and press down to lock in.

WARNINGS

To remove the floor mat, reverse the installation procedure.

FIRST AID KIT

Space is provided in the luggage compartment.

WARNING TRIANGLE

Space is provided in the luggage compartment.

FUSE BOX LOCATIONS

Engine compartment fuse box

This fuse box is located in the engine compartment See **Maintenance** (page 201).

Passenger compartment fuse box

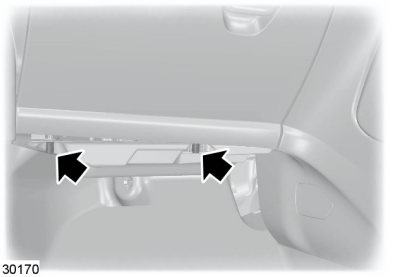

E130170

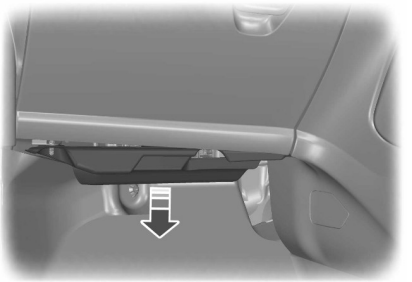

E130171

1. Pinch the retaining clips to release the cover.
2. Lower the fuse box cover and pull it towards you.

Install in the reverse order.

Load compartment fuse box

4-door

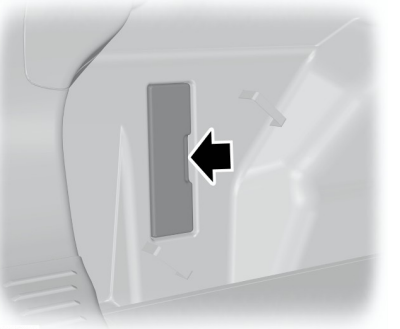

E135336

5-door

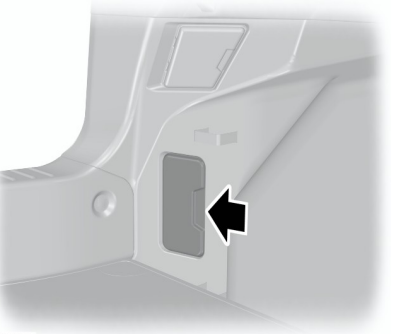

E135337

Estate

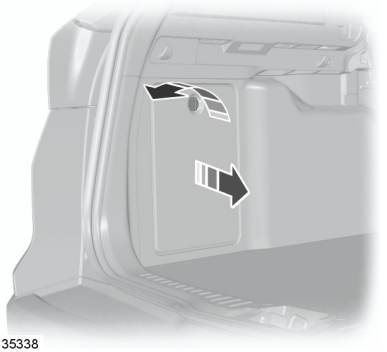

E135338

CHANGING A FUSE

WARNINGS

Do not modify the electrical system of your vehicle in any way. Have repairs to the electrical system and the replacement of relays and high current fuses carried out by a properly trained technician.

Switch the ignition and all electrical equipment off before touching or attempting to change a fuse.

CAUTION

Fit a replacement fuse with the same rating as the one you have removed.

Note: *You can identify a blown fuse by a break in the filament.*

Note: *All fuses, except high current fuses, are a push fit.*

Note: *A fuse puller is located in the engine compartment fuse box.*

FUSE SPECIFICATION CHART

Engine compartment fuse box

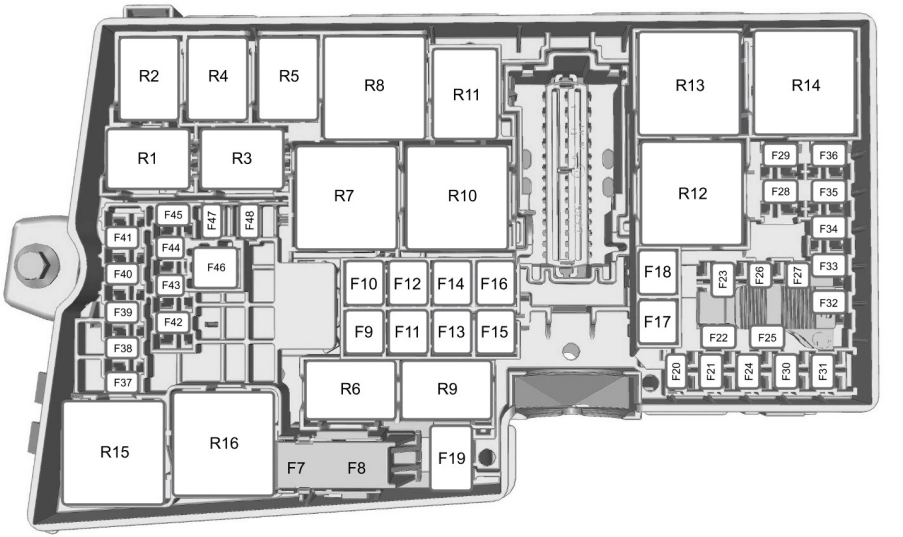

E129925

Fuse	Ampere rating	Circuits protected
7	40	Anti-lock Braking System pump, electronic stability program pump
8	30	Electronic stability program valve
9	30	Heated rear window
10	40	Heater blower
11	30	Start-stop module
12	30	Engine management systems, exhaust gas recirculation relay
13	30	Starter relay
14	40	Heated windscreen (right-hand side)

Fuse	Ampere rating	Circuits protected
15	25	Transmission control module, intercooler fan - 1.0L EcoBoost
16	40	Heated windscreen (left-hand side)
17	20	Fuel operated heater
18	20	Windscreen wipers
19	5	Anti-lock Braking System, electronic stability program module
20	15	Horn
21	5	Brake lamp switch
22	15	Battery monitoring system
23	5	Relay coils, lighting control switch module
24	20	Rear power outlet
25	10	Electric exterior mirrors
26	15	Transmission control module
27	15	Air conditioning clutch
28	5	Adaptive cruise control
29	20	Headlamp washer
30	5	Powertrain control module
31	-	Not used
32	10	Exhaust gas recirculation valve, swirl control valves, heated exhaust gas oxygen sensor (engine management), electronic fan control module relay (coil), run on water pump module - 1.0L EcoBoost
33	10	Engine control valves, canister purge valve, turbo control valve, water in fuel sensor, ignition coils - 1.0L EcoBoost
34	10	Injectors, vaporizer relay, canister purge valve
35	5	Active grille shutter (petrol engine), Run on water pump relay, Intercooler fan relay
35	15	Active grille shutter and filter heater (diesel engine)

Fuse	Ampere rating	Circuits protected
36	10	Powertrain control module
37	-	Not used
38	15	Powertrain control module, transmission control module
39	5	Headlamp control module (halogen levelling)
40	5	Electric power assisted steering
41	20	Body control module
42	15	Rear window wiper
43	15	Headlamp control module (high intensity discharge levelling), adaptive front lighting unit
44	5	Adaptive cruise control
45	10	Heated washer jets
46	25	Electric windows (front)
47	7.5	Heated exterior mirrors
48	15	Vaporizer

Passenger compartment fuse box

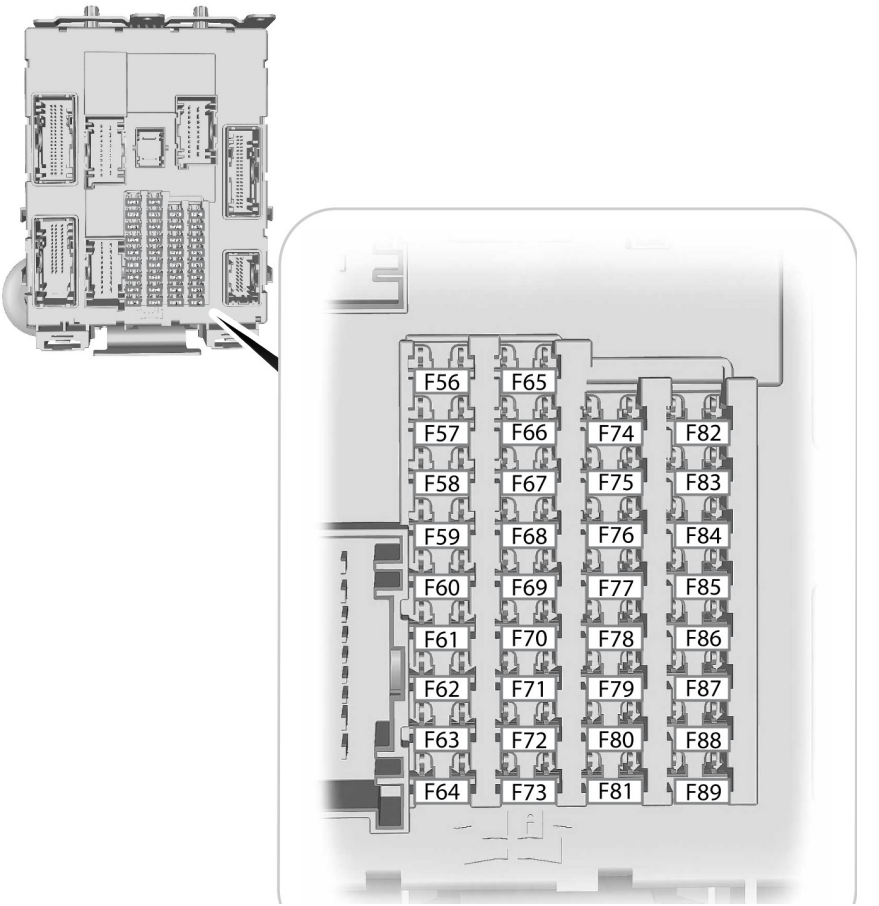

Fuse	Ampere rating	Circuits protected
56	20	Fuel pump supply
57	-	Not used
58	-	Not used
59	5	Passive anti-theft system supply
60	10	Interior lamps, driver's door switch pack, glove box, ambient lighting, electric sunroof
61	20	Cigar lighter, rear power outlet
62	5	Rain sensor module, humidity sensor, auto-dimming mirror
63	10	Adaptive cruise control
64	-	Not used
65	10	Luggage compartment lid release
66	20	Driver's door lock, double locking
67	7.5	Information and entertainment display, GPS, bluetooth phone voice control connectivity
68	15	Electrical steering column lock
69	5	Instrument cluster
70	20	Central locking
71	10	Air conditioning
72	7.5	Steering wheel control module
73	5	Battery back-up sounder (alarm system), onboard diagnostics system
74	15	Main beam
75	15	Front fog lamps
76	10	Reversing lamp
77	20	Washer pump
78	5	Ignition switch or start button
79	15	Audio unit, hazard and door lock buttons

Fuse	Ampere rating	Circuits protected
80	20	Electric sunroof
81	5	Interior motion sensor, radio frequency receiver
82	20	Washer pump ground
83	20	Central locking ground
84	20	Driver's door unlock and double locking ground
85	7.5	Climate control heater, passenger airbag deactivation switch, heated seats switch, auxiliary heater, manual air conditioning heater module
86	10	Restraint system, passenger airbag deactivation system
87	-	Not used
88	-	Not used
89	-	Not used

Load compartment fuse box

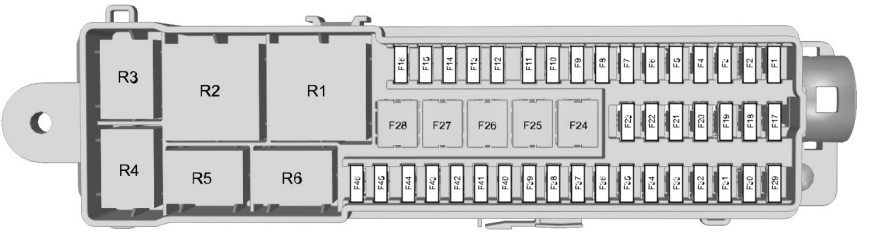

E129927

Fuse	Ampere rating	Circuits protected
1	-	Not used
2	10	Keyless vehicle module
3	5	Keyless vehicle door handles

Fuse	Ampere rating	Circuits protected
4	25	Door module (left-hand front) (electric windows, central locking, electric folding mirrors, heated exterior mirrors)
5	25	Door module (right-hand front) (electric windows, central locking, electric folding mirrors, heated exterior mirrors)
6	25	Door module (left-hand rear) (electric windows)
7	25	Door module (right-hand rear) (electric windows)
8	10	Alarm system
9	25	Power driver's seat
10	-	Not used
11	25	Power front passenger's seat - 2.0L EcoBoost - MI4
12	10	Air conditioning module (with start-stop module)
13	5	Instrument cluster (with start-stop module)
14	7.5	Information and entertainment display, GPS module (with start-stop module)
15	15	Audio unit, audio unit control panel (with start-stop module)
16	-	Not used
17	-	Not used
18	-	Not used
19	-	Not used
20	-	Not used
21	-	Not used
22	-	Not used
23	-	Not used
24	-	Not used
25	-	Not used
26	40	Trailer module
27	-	Not used

Fuse	Ampere rating	Circuits protected
28	-	Not used
29	5	Blind spot monitor, lane keeping aid, active city stop, rear view camera (without start-stop module)
30	5	Parking aid module
31	-	Not used
32	-	Not used
33	-	Not used
34	15	Heated driver's seat
35	15	Heated front passenger's seat
36	-	Not used
37	5	Electric sunroof
38	-	Not used
39	-	Not used
40	-	Not used
41	5	Retractable tow ball
42	-	Not used
43	-	Not used
44	-	Not used
45	-	Not used
46	10	Blind spot monitor, lane keeping aid, rear view camera (with start-stop module)

TOWING POINTS

Towing eye location

The screw-in towing eye is located in the spare wheel well.

The towing eye must **always** be carried in the vehicle.

Installing the towing eye

CAUTION

The screw-in towing eye has a **left-hand thread**. Turn it **anti-clockwise** to install it. Make sure that the towing eye is fully tightened.

Note: *On vehicles with a tow bar, the towing eye cannot be installed at the rear of the vehicle. Use the tow bar to tow a vehicle.*

Front towing eye

E78367

Rear towing eye

E78368

Insert a suitable object into the hole on the underside of the cover and prise off the cover.

Install the towing eye.

TOWING THE VEHICLE ON FOUR WHEELS

All vehicles

WARNINGS

Switch the ignition on when your vehicle is being towed. The steering lock will engage and the direction indicators and brake lamps will not work if you do not.

The brake and steering assistance will not operate unless the engine is running. Press the brake pedal harder and allow for increased stopping distances and heavier steering.

CAUTIONS

Too much tension in the tow rope could cause damage to your vehicle or the vehicle that is towing.

Select neutral when your vehicle is being towed.

In the event of a breakdown or mechanical failure **do not** use individual axle carriers. Your vehicle must be recovered with either **ALL** wheels on the ground or transported with **ALL** wheels lifted clear of the ground on a level platform.

Drive off slowly and smoothly without jerking the vehicle that is towing.

Vehicles with automatic transmission

CAUTIONS

If a speed of 20 km/h (12 mph) and a distance of 20 kilometres (12 miles) is to be exceeded **ALL** wheels must be lifted clear of the ground.

It is recommended not to tow with the drive wheels on the ground. However, if it is required to move the vehicle from a dangerous location, do not tow your vehicle faster than 20 km/h (12 mph) or further than 20 kilometres (12 miles).

Do not tow your vehicle backwards.

In the event of a mechanical failure of the transmission **do not** use individual axle carriers. **ALL** wheels must be lifted clear of the ground on a level platform.

Do not tow your vehicle if the ambient temperature is below 0ºC (32ºF).

Focus (CB8) Vehicles Built From: 04-10-2012, Vehicles Built Up To: 31-12-2013

GENERAL INFORMATION

Have your vehicle serviced regularly to help maintain its roadworthiness and resale value. There is a large network of Ford Authorised Repairers that are there to help you with their professional servicing expertise. We believe that their specially trained technicians are best qualified to service your vehicle properly and expertly. They are supported by a wide range of highly specialised tools developed specifically for servicing your vehicle.

In addition to regular servicing, we recommend that you carry out the following additional checks.

WARNINGS

Switch the ignition off before touching or attempting adjustment of any kind.

Do not touch the electronic ignition system parts after you have switched the ignition on or when the engine is running. The system operates at high voltage.

Keep your hands and clothing clear of the engine cooling fan. Under certain conditions, the fan may continue to run for several minutes after you have switched the engine off.

CAUTION

When carrying out maintenance checks, make sure that filler caps are fitted securely.

Daily checks

- Exterior lamps.
- Interior lamps.
- Warning lamps and indicators.

Check when refuelling

- Engine oil level. See **Engine Oil Check** (page 212).
- Brake fluid level. See **Brake and Clutch Fluid Check** (page 214).
- Washer fluid level. See **Washer Fluid Check** (page 214).
- Tyre pressures (when cold). See **Technical Specifications** (page 232).
- Tyre condition. See **Wheels and Tyres** (page 222).

Monthly checks

- Engine coolant level (engine cold). See **Engine Coolant Check** (page 213).
- Pipes, hoses and reservoirs for leaks.
- Air conditioning operation.
- Parking brake operation.
- Horn operation.
- Tightness of wheel nuts. See **Technical Specifications** (page 232).

OPENING AND CLOSING THE BONNET

Opening the bonnet

E73698

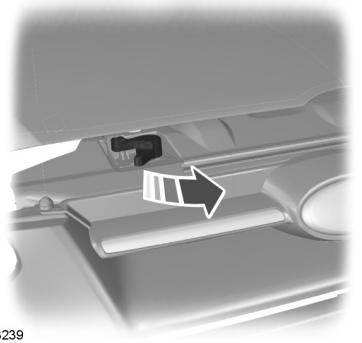

E133239

Move the yellow catch to the right.

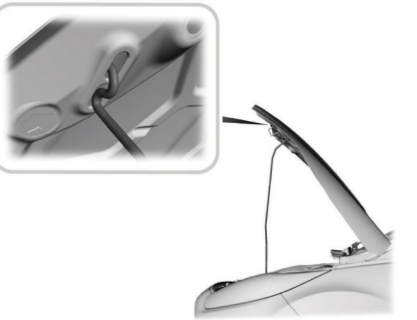

E87786

Open the bonnet and support it with the strut.

Closing the bonnet

WARNING

Make sure that the bonnet is closed properly.

Lower the bonnet and allow it to drop from under its own weight for the last 20 – 30 centimetres (8 - 11 inches).

UNDER BONNET OVERVIEW - 1.0L ECOBOOST

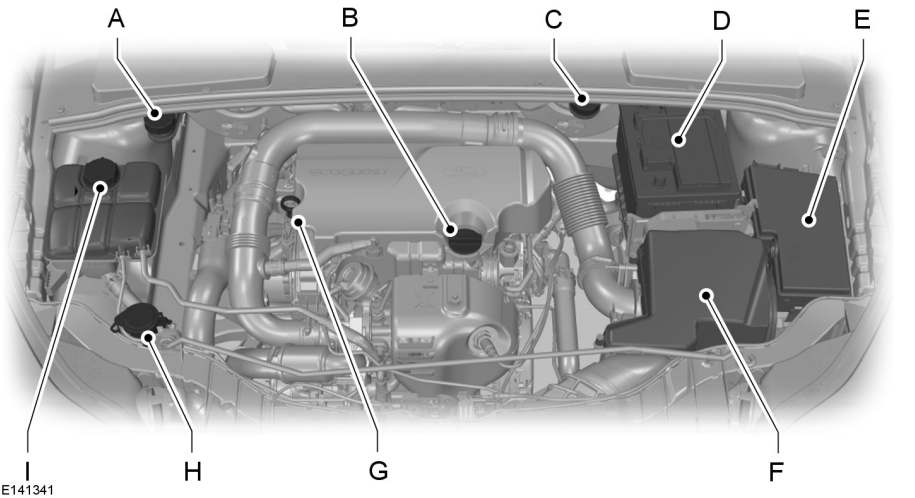

A Brake and clutch fluid reservoir (right-hand drive). See **Brake and Clutch Fluid Check** (page 214).

B Engine oil filler cap[1]. See **Engine Oil Check** (page 212).

C Brake and clutch fluid reservoir (left-hand drive). See **Brake and Clutch Fluid Check** (page 214).

D Battery. See **Vehicle battery** (page 220).

E Engine compartment fuse box. See **Fuses** (page 189).

F Air cleaner. No maintenance necessary.

G Engine oil dipstick[1]. See **Engine Oil Check** (page 212).

H Screen washer fluid reservoir. See **Washer Fluid Check** (page 214).

I Engine coolant reservoir. See **Engine Coolant Check** (page 213).

[1]The filler caps and the engine oil dipstick are coloured for easy identification.

UNDER BONNET OVERVIEW - 1.6L DURATEC-16V (SIGMA)

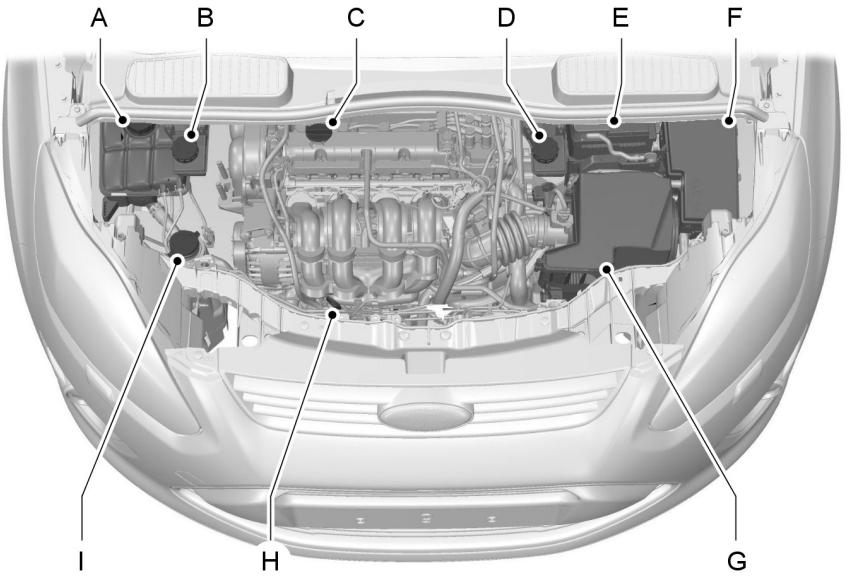

E130030

A Engine coolant reservoir*: See **Engine Coolant Check** (page 213).

B Brake and clutch fluid reservoir (right-hand drive)*: See **Brake and Clutch Fluid Check** (page 214).

C Engine oil filler cap*: See **Engine Oil Check** (page 212).

D Brake and clutch fluid reservoir (left-hand drive)*: See **Brake and Clutch Fluid Check** (page 214).

E Battery: See **Vehicle battery** (page 220).

F Engine compartment fuse box: See **Fuses** (page 189).

G Air cleaner: No maintenance necessary.

H Engine oil dipstick*: See **Engine Oil Check** (page 212).

I Screen washer fluid reservoir*: See **Washer Fluid Check** (page 214).

*For easy identification, filler caps and the engine oil dipstick are marked in colour.

UNDER BONNET OVERVIEW - 1.6L ECOBOOST SCTI (SIGMA)

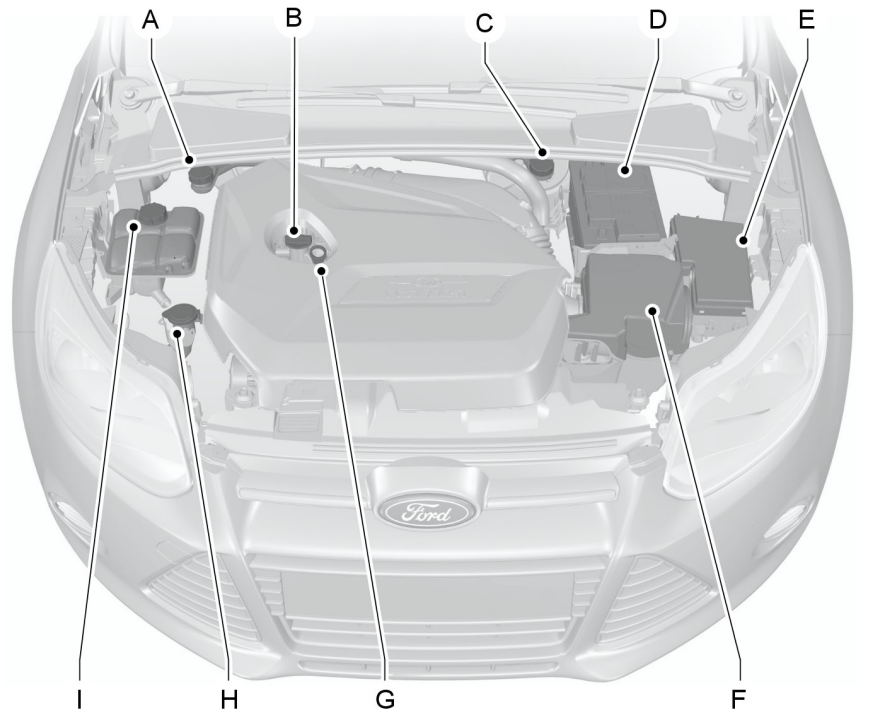

E132729

A Brake and clutch fluid reservoir (right-hand drive). See **Brake and Clutch Fluid Check** (page 214).

B Engine oil filler cap[1]. See **Engine Oil Check** (page 212).

C Brake and clutch fluid reservoir (left-hand drive). See **Brake and Clutch Fluid Check** (page 214).
D Battery. See **Vehicle battery** (page 220).
E Engine compartment fuse box. See **Fuses** (page 189).
F Air cleaner. No maintenance necessary.
G Engine oil dipstick[1]. See **Engine Oil Check** (page 212).
H Screen washer fluid reservoir. See **Washer Fluid Check** (page 214).
I Engine coolant reservoir. See **Engine Coolant Check** (page 213).

[1]The filler caps and the engine oil dipstick are coloured for easy identification.

UNDER BONNET OVERVIEW - 2.0L ECOBOOST SCTI (MI4)

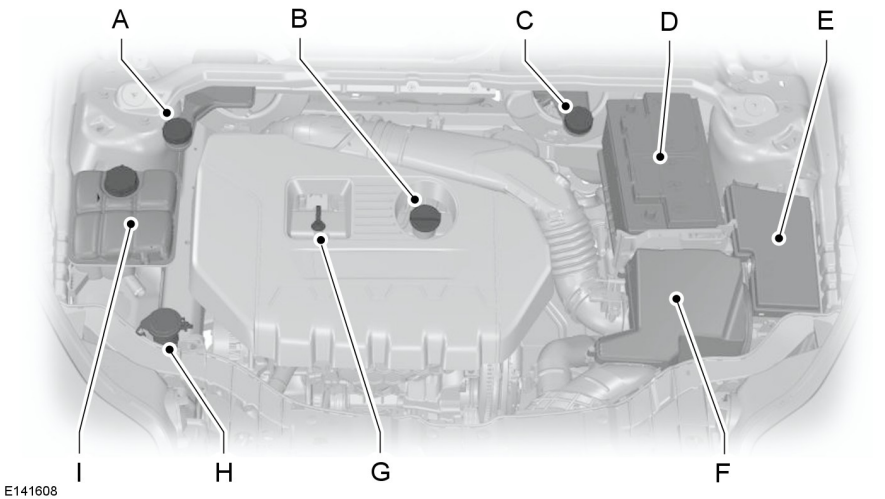

A Brake and clutch fluid reservoir (right-hand drive). See **Brake and Clutch Fluid Check** (page 214).
B Engine oil filler cap[1]. See **Engine Oil Check** (page 212).
C Brake and clutch fluid reservoir (left-hand drive). See **Brake and Clutch Fluid Check** (page 214).

D Battery. See **Vehicle battery** (page 220).
E Engine compartment fuse box. See **Fuse Specification Chart** (page 191).
F Air cleaner. No maintenance necessary.
G Engine oil dipstick[1]. See **Engine Oil Check** (page 212).
H Screen washer fluid reservoir. See **Washer Fluid Check** (page 214).
I Engine coolant reservoir. See **Engine Coolant Check** (page 213).

[1]The filler caps and the engine oil dipstick are coloured for easy identification.

UNDER BONNET OVERVIEW - 2.0L DURATEC-HE (MI4)

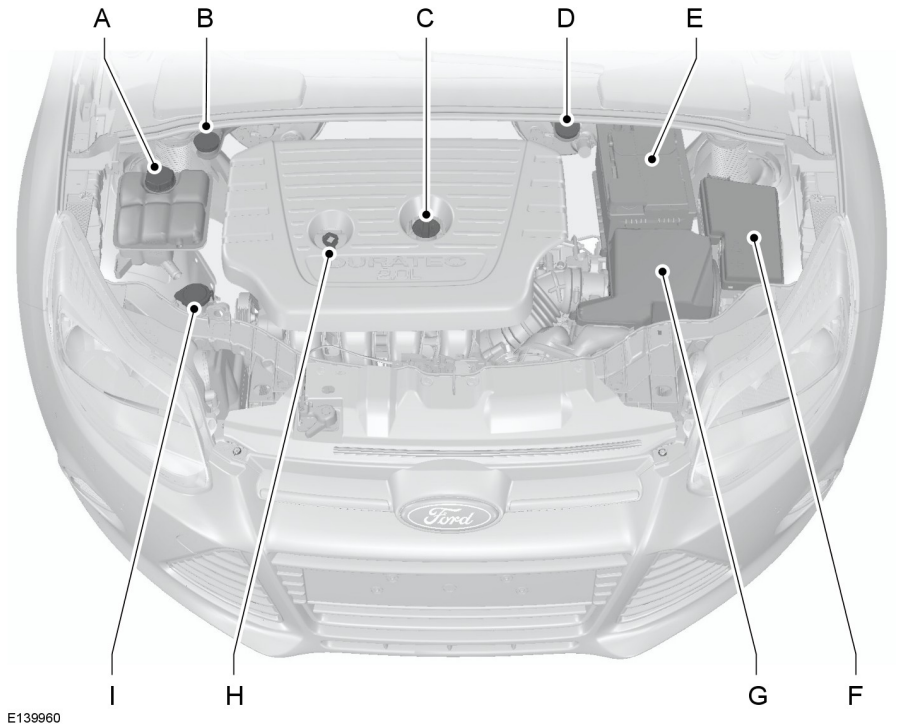

A Engine coolant reservoir*: See **Engine Coolant Check** (page 213).

B Brake and clutch fluid reservoir (right-hand drive)*: See **Brake and Clutch Fluid Check** (page 214).

C Engine oil filler cap*: See **Engine Oil Check** (page 212).

D Brake and clutch fluid reservoir (left-hand drive)*: See **Brake and Clutch Fluid Check** (page 214).

E Battery: See **Vehicle battery** (page 220).

F Engine compartment fuse box: See **Fuses** (page 189).

G Air cleaner: No maintenance necessary.

H Engine oil dipstick*: See **Engine Oil Check** (page 212).

I Screen washer fluid reservoir*: See **Washer Fluid Check** (page 214).

*For easy identification, filler caps and the engine oil dipstick are marked in colour.

UNDER BONNET OVERVIEW - 1.6L DURATORQ-TDCI (DV) DIESEL

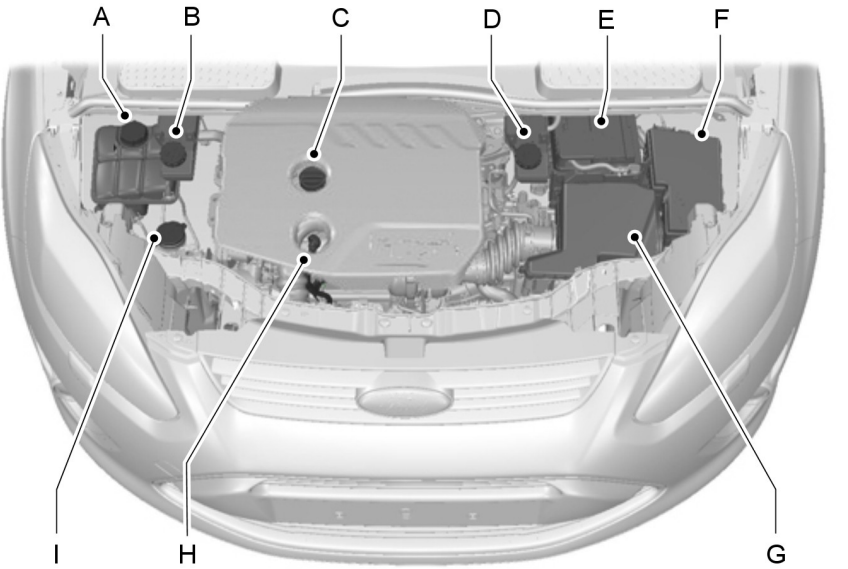

E130031

A Engine coolant reservoir*: See **Engine Coolant Check** (page 213).

B Brake and clutch fluid reservoir (right-hand drive)*: See **Brake and Clutch Fluid Check** (page 214).

C Engine oil filler cap*: See **Engine Oil Check** (page 212).

D Brake and clutch fluid reservoir (left-hand drive)*: See **Brake and Clutch Fluid Check** (page 214).

E Battery: See **Vehicle battery** (page 220).

F Engine compartment fuse box: See **Fuses** (page 189).

G Air cleaner: No maintenance necessary.

H Engine oil dipstick*: See **Engine Oil Check** (page 212).

I Screen washer fluid reservoir*: See **Washer Fluid Check** (page 214).

*For easy identification, filler caps and the engine oil dipstick are marked in colour.

UNDER BONNET OVERVIEW - 2.0L DURATORQ-TDCI (DW) DIESEL

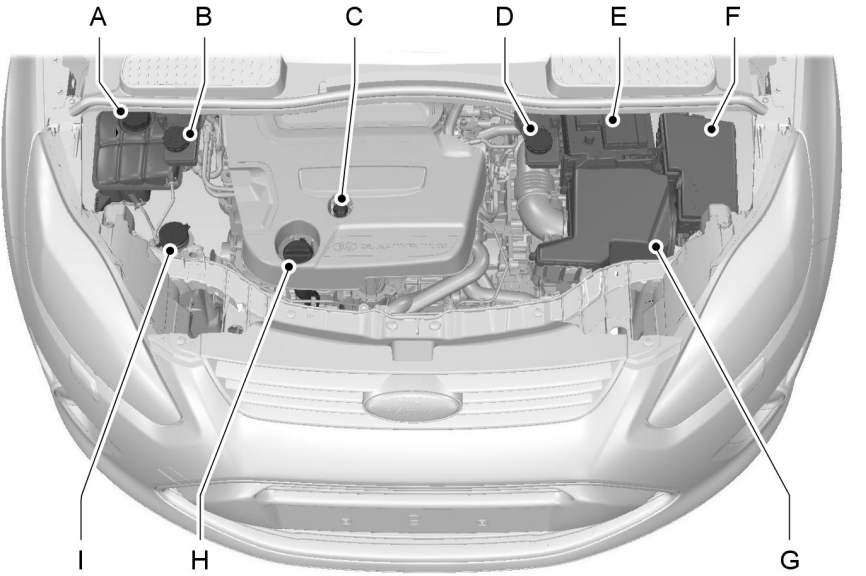

E130032

A Engine coolant reservoir*: See **Engine Coolant Check** (page 213).

B Brake and clutch fluid reservoir (right-hand drive)*: See **Brake and Clutch Fluid Check** (page 214).

C Engine oil dipstick*: See **Engine Oil Check** (page 212).

D Brake and clutch fluid reservoir (left-hand drive)*: See **Brake and Clutch Fluid Check** (page 214).

E Battery: See **Vehicle battery** (page 220).

F Engine compartment fuse box: See **Fuses** (page 189).

G Air cleaner: No maintenance necessary.

H Engine oil filler cap*: See **Engine Oil Check** (page 212).

I Screen washer fluid reservoir*: See **Washer Fluid Check** (page 214).

*For easy identification, filler caps and the engine oil dipstick are marked in colour.

ENGINE OIL DIPSTICK - 1.0L ECOBOOST

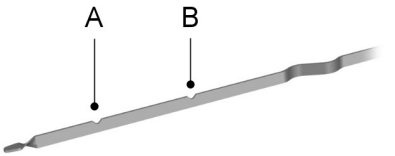

E141337

A MIN

B MAX

ENGINE OIL DIPSTICK - 1.6L DURATEC-16V (SIGMA)

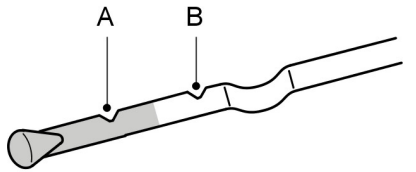

E95540

A MIN

B MAX

ENGINE OIL DIPSTICK - 1.6L ECOBOOST SCTI (SIGMA)

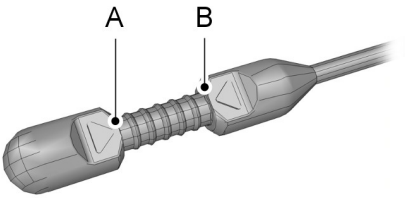

E134114

A MIN

B MAX

ENGINE OIL DIPSTICK - 2.0L ECOBOOST SCTI (MI4)

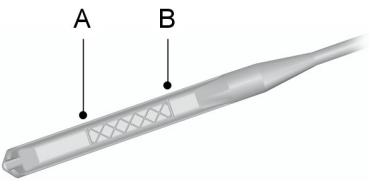

E124917

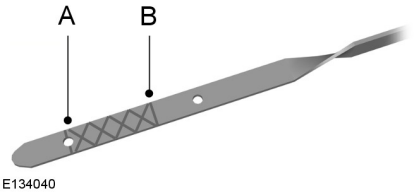

A MIN
B MAX

ENGINE OIL DIPSTICK - 2.0L DURATEC-HE (MI4)

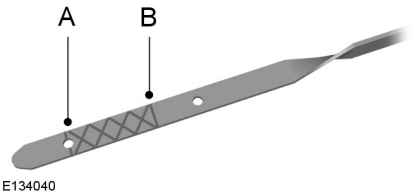

A MIN
B MAX

ENGINE OIL DIPSTICK - 1.6L DURATORQ-TDCI (DV) DIESEL/2.0L DURATORQ-TDCI (DW) DIESEL

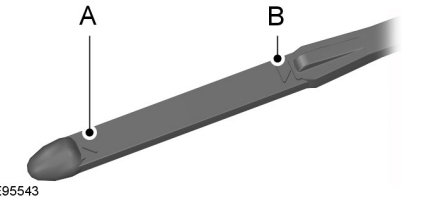

A MIN
B MAX

ENGINE OIL CHECK

CAUTION

Do not use oil additives or other engine treatments. Under certain conditions, they could damage the engine.

Note: *The oil consumption of new engines reaches its normal level after approximately 5000 kilometres (3000 miles).*

Checking the oil level

CAUTION

Make sure that the level is between the **MIN** and the **MAX** marks.

Note: *Check the level before starting the engine.*

Note: *Make sure that your vehicle is on level ground.*

Note: *Oil expands when it is hot. The level may therefore extend a few millimetres beyond the **MAX** mark.*

Remove the dipstick and wipe it with a clean, lint free cloth. Replace the dipstick and remove it again to check the oil level.

If the level is at the **MIN** mark, top up immediately.

Topping up

WARNINGS

Only top up when the engine is cold. If the engine is hot, wait 10 minutes for the engine to cool down.

Do not remove the filler cap when the engine is running.

Remove the filler cap.

WARNING

Do not top up further than the **MAX** mark.

Note: *Soak up any spillage with an absorbent cloth immediately.*

Top up with fluid that meets the Ford specification. See **Technical Specifications** (page 214).

Replace the filler cap. Turn it until you feel a strong resistance.

ENGINE COOLANT CHECK

Checking the coolant level

WARNING

Do not allow the fluid to touch your skin or eyes. If this happens, rinse the affected areas immediately with plenty of water and contact your doctor.

CAUTION

Make sure that the level is between the **MIN** and the **MAX** marks.

Note: *Coolant expands when it is hot. The level may therefore extend beyond the **MAX** mark.*

If the level is at the **MIN** mark, top up immediately.

Topping up

WARNINGS

Only top up when the engine is cold. If the engine is hot, wait 10 minutes for the engine to cool down.

Do not remove the filler cap when the engine is running.

Do not remove the filler cap when the engine is hot. Wait for the engine to cool down.

Undiluted coolant is flammable and may ignite if spilt on a hot exhaust.

CAUTIONS

In an emergency, you can add just water to the cooling system to reach a vehicle service station. Have the system checked by a properly trained technician as soon as possible.

Prolonged use of incorrect dilution of the coolant can cause engine damage from corrosion, overheating or freezing.

Unscrew the cap **slowly**. Any pressure will escape slowly as you unscrew the cap.

CAUTION

Do not top up further than the **MAX** mark.

Top up with a 50/50 mixture of coolant and water using fluid that meets the Ford specification. See **Technical Specifications** (page 214).

BRAKE AND CLUTCH FLUID CHECK

WARNINGS

Use of any fluid other than the recommended brake fluid may reduce brake efficiency and not meet Ford's performance standards.

Do not allow the fluid to touch your skin or eyes. If this happens, rinse the affected areas immediately with plenty of water and contact your doctor.

If the level is at the **MIN** mark, have the system checked by a properly trained technician as soon as possible.

Note: *Keep brake fluid clean and dry. Contamination with dirt, water, petroleum products or other materials may result in brake system damage and possible failure.*

Note: *The brake and the clutch systems are supplied from the same reservoir.*

Top up with fluid that meets the Ford specification. See **Technical Specifications** (page 214).

WASHER FLUID CHECK

Note: *The front and rear washer systems are supplied from the same reservoir.*

When topping up, use a mixture of washer fluid and water to help prevent freezing in cold weather and improve the cleaning capability. We recommend that you use only high quality washer fluid.

For information on fluid dilution, refer to the product instructions.

TECHNICAL SPECIFICATIONS

Vehicle fluids

Note: *Use fluids which meet the specifications or requirements defined. Use of other fluids may lead to damage which is not covered by your Warranty.*

Item	Specification	Viscosity Grade	Recommended fluid
Engine oil - petrol engines only	WSS-M2C948-B	5W-20	Castrol or Ford Engine Oil
Alternative engine oil - all petrol engines except 1.0L EcoBoost	WSS-M2C913-C	5W-30	Castrol or Ford Engine Oil
Engine oil - diesel engines	WSS-M2C913-C	5W-30	Castrol or Ford Engine Oil

Item	Specification	Viscosity Grade	Recommended fluid
Antifreeze	WSS-M97B44-D	-	Motorcraft SuperPlus Anti-freeze
Brake fluid	WSS-M6C65-A2 or ISO 4925 Class 6	-	Motorcraft or Ford DOT 4 LV High Performance Brake Fluid

Your engine has been designed to be used with Castrol and Ford Engine Oil, which gives a fuel economy benefit whilst maintaining the durability of your engine.

Topping up the oil: If you are unable to find an oil that meets the specification defined by **WSS-M2C913-C** or **WSS-M2C948-B** (petrol engines only), you must use **SAE 5W-30** that meets the specification defined by **ACEA A5/B5**.

Using topping up oils other than the one specified can result in longer engine cranking periods, reduced engine performance, reduced fuel economy and increased emission levels.

Castrol engine oil recommended.

Capacities

Variant	Item	Capacity in Litres (gallons)
All petrol engines except 2.0L EcoBoost - MI4	Fuel tank	55 (12.1)
2.0L EcoBoost - MI4	Fuel tank	62 (13.6)
1.6L Duratorq-TDCi	Fuel tank	53 (11.7)
2.0L Duratorq-TDCi - DW	Fuel tank	60 (13.2)
All	Windscreen washer system - with headlamp washers	4.5 (1)
All	Windscreen washer system - without headlamp washers	3 (0.7)
1.0L EcoBoost	Engine oil - with filter	4.1 (0.9)
1.0L EcoBoost	Engine oil - without filter	4 (0.9)

Variant	Item	Capacity in Litres (gallons)
1.0L EcoBoost	Cooling system	approx. 6.3 (1.4)
1.6L Duratec-16V Ti-VCT	Engine oil - with filter	4.1 (0.9)
1.6L Duratec-16V Ti-VCT	Engine oil - without filter	3.75 (0.8)
1.6L Duratec-16V Ti-VCT	Cooling system	approx. 5.8 (1.3)
1.6L EcoBoost	Engine oil - with filter	4.1 (0.9)
1.6L EcoBoost	Engine oil - without filter	3.75 (0.8)
1.6L EcoBoost	Cooling system	approx. 6.3 (1.4)
2.0L Duratec-HE - MI4	Engine oil - with filter	4.3 (1)
2.0L Duratec-HE - MI4	Engine oil - without filter	3.9 (0.9)
2.0L Duratec-HE - MI4	Cooling system	approx. 6.5 (1.4)
2.0L EcoBoost - MI4	Engine oil - with filter	5.4 (1.2)
2.0L EcoBoost - MI4	Engine oil - without filter	5.1 (1.1)
2.0L EcoBoost - MI4	Cooling system	approx. 8.7 (1.9)
1.6L Duratorq-TDCi	Engine oil - with filter	3.8 (0.8)
1.6L Duratorq-TDCi	Engine oil - without filter	3.5 (0.8)
1.6L Duratorq-TDCi	Cooling system	approx. 7.3 (1.6)
2.0L Duratorq-TDCi - DW	Engine oil - with filter	5.7 (1.3)
2.0L Duratorq-TDCi - DW	Engine oil - without filter	5.4 (1.2)
2.0L Duratorq-TDCi - DW	Cooling system	approx. 8.5 (1.9)

Engine oil top up capacities

Engine	Capacity in litres (gallons)
1.0L EcoBoost	0.8 (0.2)
1.6L Duratec-16V Ti-VCT	0.8 (0.2)
1.6L EcoBoost	0.8 (0.2)

Engine	Capacity in litres (gallons)
2.0L Duratec-HE - MI4 and 2.0L EcoBoost - MI4	0.9 (0.2)
1.6L Duratorq-TDCi	1.6 (0.4)
2.0L Duratorq-TDCi - DW	1.8 (0.4)

CLEANING THE EXTERIOR

WARNING

If you use a car wash with a waxing cycle, make sure that you remove the wax from the windscreen.

CAUTIONS

Prior to using a car wash facility check the suitability of it for your vehicle.

Some car wash installations use water at high pressure. This could damage certain parts of your vehicle.

Remove the aerial before using an automatic car wash.

Switch the heater blower off to prevent contamination of the fresh air filter.

We recommend that you wash your vehicle with a sponge and lukewarm water containing a car shampoo.

Cleaning the headlamps

CAUTIONS

Do not scrape the headlamp lenses or use abrasives, alcoholic solvents or chemical solvents to clean them.

Do not wipe the headlamps when they are dry.

Cleaning the rear window

CAUTION

Do not scrape the inside of the rear window or use abrasives or chemical solvents to clean it.

Use a clean, lint free cloth or a damp chamois leather to clean the inside of the rear window.

Cleaning the chrome trim

CAUTION

Do not use abrasives or chemical solvents. Use soapy water.

Cleaning the alloy wheels

Note: *Do not apply a cleaning chemical to warm or hot wheel rims and covers.*

Note: *Industrial-strength (heavy-duty) cleaners, or cleaning chemicals, in combination with brush agitation to remove brake dust and dirt, could wear away the clear coat finish over a period time.*

Note: *Do not use hydrofluoric acid-based or high caustic-based wheel cleaners, steel wool, fuels or strong household detergent.*

Note: *If you intend parking your vehicle for an extended period after cleaning the wheels with a wheel cleaner, drive your vehicle for a few minutes before doing so. This will reduce the risk of increased corrosion of the brake discs, brake pads and linings.*

Note: *Some automatic car washes may cause damage to the finish on your wheel rims and covers.*

Alloy wheels and wheel covers are coated with a clear coat paint finish. To maintain their condition we recommend that you:

- Clean them weekly with the recommended wheel and tyre cleaner.
- Use a sponge to remove heavy deposits of dirt and brake dust accumulation.
- Rinse them thoroughly with a pressurised stream of water when you have completed the cleaning process.

We recommend that you use Ford service wheel cleaner. Make sure that you read and follow the manufacturer's instructions.

Focus (CB8) Vehicles Built From: 04-10-2012, Vehicles Built Up To: 31-12-2013

Using other non-recommended cleaning products can result in severe and permanent cosmetic damage.

Body paintwork preservation

CAUTIONS

Do not polish your vehicle in strong sunshine.

Do not allow polish to touch plastic surfaces. It could be difficult to remove.

Do not apply polish to the windscreen or rear window. This could cause the wipers to become noisy and they may not clear the window properly.

We recommend that you wax the paintwork once or twice a year.

CLEANING THE INTERIOR

Seat belts

WARNINGS

Do not use abrasives, or chemical solvents to clean them.

Do not allow moisture to penetrate the seat belt retractor mechanism.

Clean the seat belts with interior cleaner or water applied with a soft sponge. Let the seat belts dry naturally, away from artificial heat.

Instrument cluster screens, LCD screens, radio screens

WARNING

Do not use abrasives, alcoholic solvents or chemical solvents to clean them.

Rear windows

CAUTIONS

Do not use any abrasive materials to clean the interior of the rear windows.

Do not install stickers or labels to the interior of the rear windows.

REPAIRING MINOR PAINT DAMAGE

CAUTION

Remove apparently harmless looking substances from the paintwork immediately (e.g. bird droppings, tree resins, insect remains, tar spots, road salt and industrial fall out).

You should repair paintwork damage caused by stones from the road or minor scratches as soon as possible. A choice of products is available from your Ford Dealer. Read and follow the manufacturer's instructions.

JUMP-STARTING THE VEHICLE

WARNING

Do not use fuel lines, engine rocker covers or the intake manifold as grounding points.

CAUTIONS

Connect batteries with only the same nominal voltage.

Always use booster cables with insulated clamps and adequate size cable.

Do not disconnect the battery from the vehicle's electrical system.

To connect the booster cables

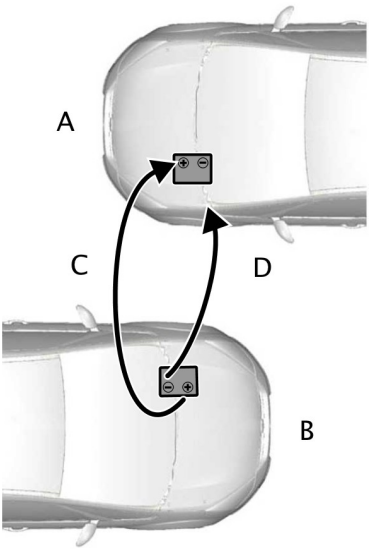

E102925

A Flat battery vehicle
B Booster battery vehicle
C Positive connection cable
D Negative connection cable

1. Position the vehicles so that they do not touch one another.
2. Switch off the engine and any electrical equipment.
3. Connect the positive (+) terminal of vehicle **B** with the positive (+) terminal of vehicle **A** (cable **C**).
4. Connect the negative (-) terminal of vehicle **B** to the ground connection of vehicle **A** (cable **D**). See **Battery connection points** (page 221).

CAUTIONS

Do not connect to the negative (–) terminal of the flat battery.

Make sure that the cables are clear of any moving parts and fuel delivery system parts.

To start the engine

1. Run the engine of vehicle **B** at moderately high speed.
2. Start the engine of vehicle **A**.
3. Run both vehicles for a minimum of three minutes before disconnecting the cables.

CAUTION

Do not switch on the headlamps when disconnecting the cables. The peak voltage could blow the bulbs.

Disconnect the cables in the reverse order.

CHANGING THE 12V BATTERY

CAUTION

For vehicles with Start-stop the battery requirement is different. It must be replaced by one of exactly the same specification as the original.

Note: *Where applicable, the audio system must be reprogrammed with the keycode.*

The battery is located in the engine compartment. See **Maintenance** (page 201).

BATTERY CONNECTION POINTS

CAUTION

Do not connect to the negative (–) terminal of the flat battery.

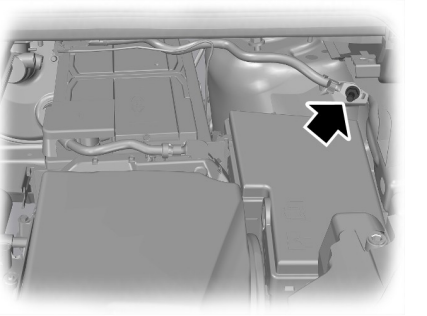

E130431

The ground connection point is located to the right of the battery near the engine compartment fuse box.

GENERAL INFORMATION

CAUTIONS

Use only approved wheel and tyre sizes. Using other sizes could damage the vehicle and will make the National Type Approval invalid.

If you change the diameter of the tyres from that fitted at the factory, the speedometer may not display the correct speed. Take the vehicle to your dealer to have the engine management system reprogrammed.

If you intend to change the size of the wheels from that fitted at the factory, check the suitability with your dealer.

Note: *Check your tyre pressures regularly to optimise fuel economy.*

A decal with tyre pressure data is located in the driver's door opening at the B-pillar.

Check and set the tyre pressure at the ambient temperature in which you are intending to drive the vehicle and when the tyres are cold.

CHANGING A ROAD WHEEL

Locking wheel nuts

You can obtain a replacement locking wheel nut key and replacement locking wheel nuts from your dealer using the reference number certificate.

Vehicles with a spare wheel

If the spare wheel is exactly the same type and size as the other fitted road wheels, you can replace the existing road wheel with the spare wheel and continue to drive in the normal manner.

If the spare wheel is different to the other road wheels, it will carry a yellow label with the appropriate speed limit.

Refer to the following information before changing the road wheel.

WARNINGS

Drive the shortest possible distances.

Do not fit more than one spare wheel on your vehicle at any one time.

Do not carry out any tyre repairs on a spare wheel.

Do not drive through an automatic car wash.

If you are unsure what type of spare wheel you have do not exceed 80 km/h (50 mph).

On vehicles with a 2.0L EcoBoost SCTi (MI4) engine, do not switch stability control off or select sport mode if you have fitted a temporary spare wheel to your vehicle.

Only fit snow chains to specified tyres. See **Technical Specifications** (page 232).

Note: *The ground clearance of your vehicle may be reduced. Take care when parking next to a kerb.*

Note: *Your vehicle may exhibit some unusual driving characteristics.*

Vehicle jack

WARNINGS

The vehicle jack supplied with your vehicle should only be used when changing a wheel in emergency situations.

Before using the vehicle jack, check that it is not damaged or deformed and that the thread is lubricated and free from foreign matter.

WARNINGS

Never place anything between the jack and the ground, or the jack and the vehicle.

Note: *Vehicles with a tyre repair kit are not equipped with a vehicle jack or a wheel brace.*

It is recommended to use a workshop type hydraulic jack for changing between summer and winter tyres.

Note: *Use a jack with a minimum lifting capacity of 1.5 tonnes and a lifting plate with a minimum diameter of 80 millimetres (3.1 inches).*

Vehicles without tyre repair kit

Your vehicle jack, wheel brace, screw-in towing eye and wheel trim remover are located in the spare wheel well.

Jacking and lifting points

WARNING

Use only the specified jacking points. If you use other positions, you may damage the body, steering, suspension, engine, braking system or the fuel lines.

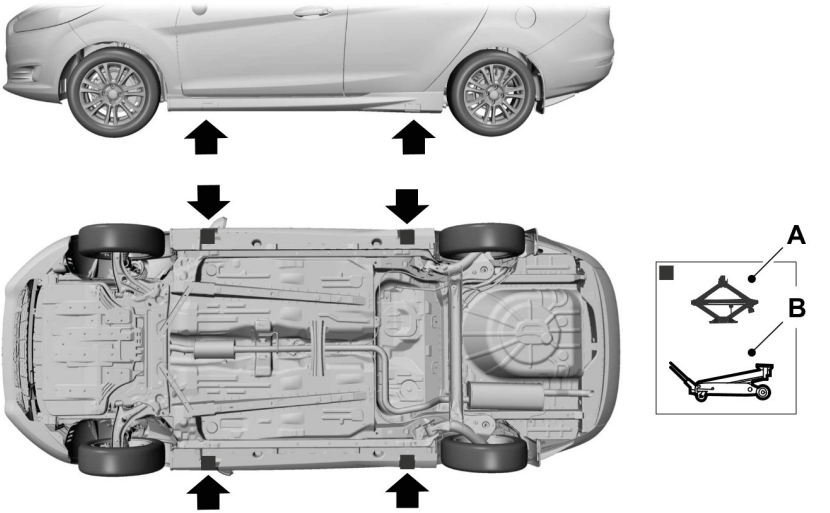

E92658

A Emergency use only
B Maintenance

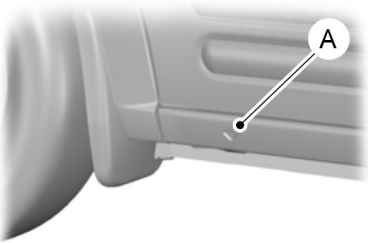

E93302

Small arrow-shaped marks on the sills **A** show the location of the jacking points.

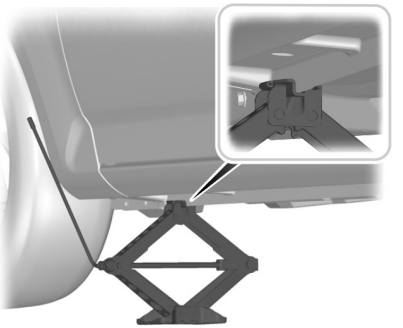

E92932

E93020

Assembling the wheel brace

WARNING

The screw-in towing eye has a **left-hand thread**. Turn it anti-clockwise to install it. Make sure that the towing eye is fully tightened.

E122502

Insert the screw-in towing eye into the wheel brace.

Removing the wheel trim

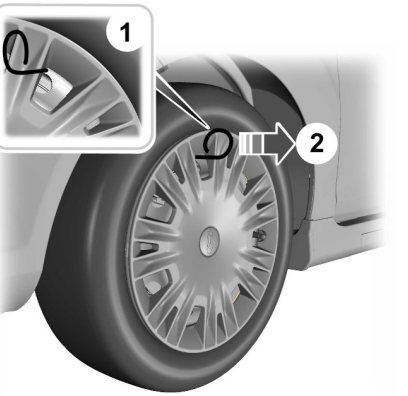

E122314

1. Insert the wheel trim remover.
2. Remove the wheel trim.

Note: *Make sure that you pull the wheel trim remover at right angles to the trim.*

Removing a road wheel

WARNINGS

Park your vehicle in such a position that neither the traffic nor you are hindered or endangered.

Set up a warning triangle.

Make sure that the vehicle is on firm, level ground with the wheels pointing straight ahead.

Switch off the ignition and apply the parking brake.

If your vehicle has a manual transmission, select first or reverse gear. If it has an automatic transmission, select park.

Have the passengers leave the vehicle.

Secure the diagonally opposite wheel with an appropriate block or wheel chock.

Make sure that the arrows on directional tyres point in the direction of rotation when the vehicle is moving forwards. If you have to fit a spare wheel with the arrows pointing in the opposite direction, have the tyre refitted in the correct direction by a properly trained technician.

Do not work underneath the vehicle when it is supported only by a jack.

Make sure that the jack is vertical to the jacking point and the base is flat on the ground.

Note: *Do not lay alloy wheels face down on the ground, this will damage the paint.*

Note: *The spare wheel is located under the floor cover in the luggage compartment.*

1. Install the locking wheel nut key.

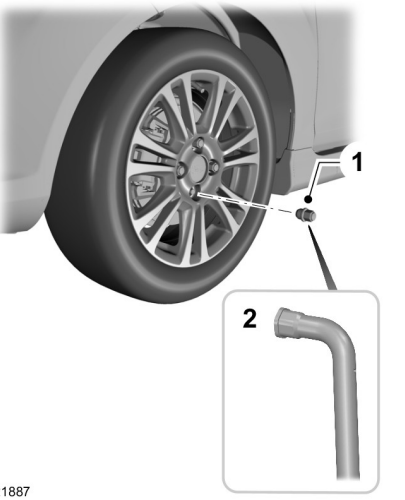

E121887

2. Slacken the wheel nuts.
3. Jack up the vehicle until the tyre is clear of the ground.
4. Remove the wheel nuts and the wheel.

Installing a road wheel

WARNINGS

Use only approved wheel and tyre sizes. Using other sizes could damage the vehicle and will make the National Type Approval invalid. See **Technical Specifications** (page 232).

Do not fit run flat tyres on vehicles that were not originally fitted with them. Please contact your dealer for more details regarding compatibility.

WARNING

Do not install alloy wheels using wheel nuts designed for use with steel wheels.

Note: *The wheel nuts of alloy wheels and spoked steel wheels can also be used for the steel spare wheel for a short time (maximum two weeks).*

Note: *Make sure the wheel and hub contact surfaces are free from foreign matter.*

Note: *Make sure that the cones on the wheel nuts are against the wheel.*

1. Install the wheel.
2. Install the wheel nuts finger tight.
3. Install the locking wheel nut key.

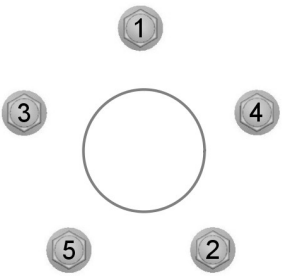

E75442

4. Partially tighten the wheel nuts in the sequence shown.
5. Lower the vehicle and remove the jack.
6. Fully tighten the wheel nuts in the sequence shown. See **Technical Specifications** (page 232).
7. Install the wheel trim using the ball of your hand.

WARNING

Have the wheel nuts checked for tightness and the tyre pressure checked as soon as possible.

TEMPORARY MOBILITY KIT

Your vehicle may not have a spare tyre. Therefore you will have an emergency kit which will only repair one flat tyre.

The kit is located in the spare wheel well.

General information

WARNINGS

Depending on the type and extent of tyre damage, some tyres can only be partially sealed or not sealed at all. Loss of tyre pressure can affect vehicle handling, leading to loss of vehicle control.

Do not use the kit on a previously damaged tyre, for example when it has been driven under inflated.

Do not use the kit on run flat tyres.

Do not try to seal damage to the tyre's sidewall.

The kit seals most tyre punctures [with a diameter of up to six millimetres (1/4 inch)] to temporarily restore mobility.

Observe the following rules when using the kit:

- Drive with caution and avoid making sudden steering or driving manoeuvres, especially if the vehicle is heavily loaded or you are towing a trailer.
- The kit will provide you with an emergency temporary repair, enabling you to continue your journey to the next vehicle or tyre dealer, or to drive a maximum distance of 200 kilometres (125 miles).

- Do not exceed a maximum speed of 80 km/h (50 mph).
- Keep the kit out of the reach of children.
- Only use the kit when the ambient temperature is between –40ºC (-40ºF) and +70ºC (+158ºF).

Using the kit

WARNINGS

Compressed air can act as an explosive or propellant.

Never leave the kit unattended while in use.

CAUTION

Do not keep the compressor operating for more than 10 minutes.

Note: *Use the kit only for the vehicle with which it was supplied.*

- Park your vehicle at the roadside so that you do not obstruct the flow of traffic and so that you are able to use the kit without being in danger.
- Apply the parking brake, even if you have parked on a level road, to make sure that the vehicle will not move.
- Do not attempt to remove foreign objects like nails or screws penetrating the tyre.
- Leave the engine running while the kit is in use, but not if your vehicle is in an enclosed or poorly ventilated area (for example, inside a building). In these circumstances, switch the compressor on with the engine turned off.
- You must replace the sealant bottle with a new one before the expiry date (see top of bottle).
- Inform all other users of your vehicle that the tyre has been temporarily sealed with the kit. Make them aware of the special driving conditions to be observed.

Inflating the tyre

WARNINGS

Check the sidewall of the tyre prior to inflation. If there are any cracks, bumps or similar damage, do not attempt to inflate the tyre.

Do not stand directly beside the tyre while the compressor is pumping.

Watch the sidewall of the tyre. If any cracks, bumps or similar damage appear, turn off the compressor and let the air out by means of the pressure relief valve B. Do not continue driving with this tyre.

The sealant contains natural rubber latex. Avoid contact with skin and clothing. If this happens, rinse the affected areas immediately with plenty of water. Consult a doctor if you experience an adverse reaction.

If the tyre inflation pressure does not reach 1.8 bar (26 psi) within 10 minutes, the tyre may have suffered excessive damage, making a temporary repair impossible. In this case, do not continue driving with this tyre.

Screwing the bottle onto the bottle holder will pierce the seal of the bottle. Do not unscrew the bottle from the holder as the sealant will escape.

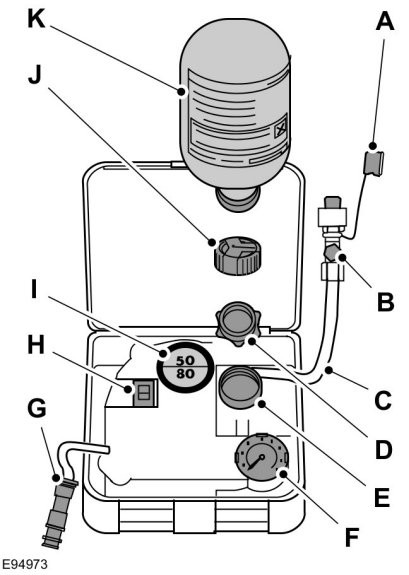

E94973

A	Protective cap
B	Pressure relief valve
C	Hose
D	Orange cap
E	Bottle holder
F	Pressure gauge
G	Power plug with cable
H	Compressor switch
I	Label
J	Bottle lid
K	Sealant bottle

1. Open the lid of the tyre repair kit.
2. Peel off the label I showing the maximum permissible speed of 80 km/h (50 mph) from the casing and attach it to the instrument panel in the driver's field of view. Make sure the label does not obscure anything important.
3. Take the hose C and the power plug with cable G out of the kit.
4. Unscrew the orange cap D and the bottle lid J.
5. Screw the sealant bottle K clockwise into the bottle holder E fully tight.
6. Remove the valve cap from the damaged tyre.
7. Detach the protective cap A from the hose C and screw the hose C firmly onto the valve of the damaged tyre.
8. Make sure that the compressor switch H is in position 0.
9. Insert the power plug G into the cigar lighter socket or auxiliary power socket. See **Cigar Lighter** (page 118). See **Auxiliary Power Points** (page 118).
10. Start the engine.
11. Move the compressor switch H to position 1.
12. Inflate the tyre for no longer than 10 minutes to an inflation pressure of minimum 1.8 bar (26 psi) and a maximum of 3.5 bar (51 psi). Move the compressor switch H to position 0 and check the current tyre pressure with pressure gauge F.

Note: *When pumping in the sealant through the tyre valve, the pressure may rise up to 6 bar (87 psi) but will drop again after about 30 seconds.*

Note: *After you have switched the compressor off, you may hear air escaping from the damaged tyre. This is normal and can be ignored provided that the specified minimum tyre pressure has been reached.*

13. Remove the power plug G from the cigar lighter socket or auxiliary power socket.
14. Quickly unscrew the hose C from the tyre valve and replace the protective cap A. Fasten the valve cap again.

Note: *Some residual sealant fluid may drip or spray out of hose C while you are disconnecting it. This is normal.*

15. Leave the sealant bottle K in the bottle holder E.
16. Make sure the kit, the bottle lid and the orange cap are stored safely, but still easily accessible in the vehicle. The kit will be required again when you check the tyre pressure.
17. Immediately drive approximately three kilometres (two miles) so that the sealant can seal the damaged area.

WARNING

If you experience heavy vibrations, unsteady steering behaviour or noises while driving, reduce your speed and drive with caution to a place where it is safe for you to stop the vehicle. Recheck the tyre and its pressure. If the tyre pressure is less than 1.3 bar (19 psi) or if there are any cracks, bumps or similar damage visible, do not continue driving with this tyre.

Checking the tyre pressure

1. Stop the vehicle after driving approximately three kilometres (two miles). Check, and where necessary, adjust the pressure of the damaged tyre.
2. Attach the kit and read the tyre pressure from the pressure gauge F.
3. If the pressure of the sealant-filled tyre is 1.3 bar (19 psi) or more, adjust it to the specified pressure. See **Technical Specifications** (page 232).
4. Follow the inflation procedure once again to top up the tyre.
5. Check the tyre pressure again from the pressure gauge F. If the tyre pressure is too high, deflate the tyre to the specified pressure using the pressure relief valve B.
6. Once you have inflated the tyre to its correct tyre pressure, move the compressor switch H to position 0, remove the power plug G from the socket, unscrew the hose C, fasten the valve cap and replace the protective cap A.
7. Leave the sealant bottle K in the bottle holder E and store the kit away safely in its original location.
8. Drive to the nearest tyre specialist to get the damaged tyre replaced. Before the tyre is removed from the rim, inform your tyre dealer that the tyre contains sealant. You must renew the sealant bottle K and hose C as soon as possible once used.

Note: *Remember that this kit only provides temporary mobility. Regulations concerning tyre repair after usage of tyre repair kit may differ from country to country. You should consult a tyre specialist for advice.*

WARNING

Before driving, make sure the tyre is adjusted to the recommended inflation pressure. See **Technical Specifications** (page 232). Monitor the tyre pressure until the sealed tyre is replaced.

Empty sealant bottles can be disposed of together with normal household waste. Return remains of sealant to your dealer or dispose of it in compliance with local waste disposal regulations.

TYRE CARE

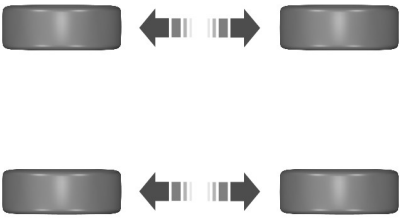

E70415

To make sure the front and rear tyres of your vehicle wear evenly and last longer, we recommend that you swap the tyres from front to rear and vice versa at regular intervals of between 5000 and 10000 kilometres (3000 and 6000 miles).

CAUTION

Do not scrub the sidewalls of the tyres when you are parking.

If you have to mount a kerb, do so slowly and approach it with the wheels at right-angles to the kerb.

Examine the tyres regularly for cuts, foreign objects and uneven wear of the tread. Uneven wear could mean that the wheel alignment is outside specification.

Check the tyre pressures (including the spare) when cold, every two weeks.

USING WINTER TYRES

CAUTION

Make sure that you use the correct wheel nuts for the type of wheel the winter tyres are fitted to.

If winter tyres are used, make sure that the tyre pressures are correct. See **Technical Specifications** (page 232).

USING SNOW CHAINS

WARNINGS

Do not exceed 50 km/h (30 mph).

Do not use snow chains on snow-free roads.

Only fit snow chains to specified tyres. See **Technical Specifications** (page 232).

CAUTION

If your vehicle is fitted with wheel trims, remove them before fitting snow chains.

Note: *The ABS will continue to operate normally.*

Only use small link snow chains.

Only use snow chains on the front wheels.

Vehicles with stability control (ESP)

Vehicles with stability control (ESP) may exhibit some unusual driving characteristics which can be reduced by switching traction control off. See **Using Stability Control** (page 141).

USING SNOW CHAINS - 2.0L ECOBOOST SCTI (MI4)

WARNINGS

Do not exceed 50 km/h (30 mph).

Do not use snow chains on snow-free roads.

Only fit snow chains to specified tyres. See **Technical Specifications** (page 232).

If your vehicle is fitted with wheel trims, remove them before fitting snow chains.

Note: *The ABS will continue to operate normally.*

Only use snow chains of 12 millimetre or smaller on 215/55 R 16 tyres.

Only use snow chains of 10 millimetre or smaller on 215/50 R 17 tyres.

Only use snow chains on the front wheels.

Vehicles with stability control (ESP)

Vehicles with stability control (ESP) may exhibit some unusual driving characteristics which can be reduced by switching traction control off. See **Using Stability Control** (page 141).

TYRE PRESSURE MONITORING SYSTEM

WARNINGS

The system does not relieve you of your responsibility to regularly check the tyre pressures.

The system will only provide a low tyre pressure warning. It will not inflate the tyres.

WARNINGS

Do not drive on significantly under-inflated tyres. This may cause the tyres to overheat and fail. Under-inflation reduces fuel efficiency, tyre tread life and may also affect your ability to drive the vehicle safely.

CAUTIONS

Do not bend or damage the valves when you are inflating the tyres.

Have tyres installed by properly trained technicians.

The Deflation Detection System will alert you if there is a change of air pressure in any tyre. It does this by using the ABS sensors to detect the rolling circumference of the wheels. When the circumference changes, this indicates low pressure in a tyre, a warning message is displayed in the information display and the message indicator will illuminate. See **Information Messages** (page 87).

If a low pressure warning message is displayed in the information display, check the tyre pressures as soon as possible and inflate them to the recommended pressure. See **Technical Specifications** (page 232).

If this happens frequently, have the cause determined and rectified as soon as possible.

Apart from a too low tyre pressure or a damaged tyre, the following situations can affect the rolling circumference:

- Vehicle load is uneven.
- When using a trailer or travelling up and down an incline.
- Using snow chains.
- Driving on soft surfaces such as snow or mud.

Note: *The system will still function correctly, but there may be an increased detection time.*

System reset

Note: *Do not reset the system when the vehicle is moving.*

Note: *You should reset the system following any adjustment to the tyre pressures or any changing of tyres.*

Note: *Turn the ignition on.*

1. Using the information display control, navigate to **Settings > Driver assist > Deflation detection**
2. Press and hold the **OK** button until confirmation appears.

TECHNICAL SPECIFICATIONS

Tyre pressures (cold tyres) - All except 2.0L EcoBoost - MI4

Wheel nut torque

Wheel type	Nm (lb-ft)
All	135 (100)

Up to 80 km/h (50 mph)

Variant	Tyre size	Normal load		Full load	
		Front	Rear	Front	Rear
		bar (lbf/in²)	bar (lbf/in²)	bar (lbf/in²)	bar (lbf/in²)
All	T125/80 R 16	4.2 (61)	4.2 (61)	4.2 (61)	4.2 (61)
All	T125/90 R 16	4.2 (61)	4.2 (61)	4.2 (61)	4.2 (61)

Up to 160 km/h (100 mph)

Variant	Tyre size	Normal load		Full load	
		Front	Rear	Front	Rear
		bar (psi)	bar (psi)	bar (psi)	bar (psi)
All	205/55 R 16*	2.1 (31)	2.1 (31)	2.4 (35)	2.8 (41)
1.0L EcoBoost, 1.6L Duratec-16V Ti-VCT, 1.6L EcoBoost, 2.0L Duratec-HE - MI4, 1.6L Duratorq-TDCi	215/55 R 16*	2.1 (31)	2.1 (31)	2.4 (35)	2.8 (41)
2.0L Duratorq-TDCi - DW	215/55 R 16*	2.3 (33)	2.1 (31)	2.4 (35)	2.8 (41)
1.0L EcoBoost, 1.6L Duratec-16V Ti-VCT, 1.6L EcoBoost, 2.0L Duratec-HE - MI4, 1.6L Duratorq-TDCi	215/50 R 17	2.1 (31)	2.1 (31)	2.4 (35)	2.8 (41)
2.0L Duratorq-TDCi - DW	215/50 R 17	2.3 (33)	2.1 (31)	2.4 (35)	2.8 (41)
1.6L Duratec-16V Ti-VCT, 1.6L EcoBoost, 2.0L Duratec-HE - MI4, 1.6L Duratorq-TDCi	235/40 R 18	2.1 (31)	2.1 (31)	2.4 (35)	2.8 (41)
2.0L Duratorq-TDCi - DW	235/40 R 18	2.3 (33)	2.1 (31)	2.4 (35)	2.8 (41)

*Only fit snow chains to specified tyres.

Continuous speed in excess of 160 km/h (100 mph)

Variant	Tyre size	Normal load		Full load	
		Front	Rear	Front	Rear
		bar (psi)	bar (psi)	bar (psi)	bar (psi)
1.0L EcoBoost, 1.6L Duratec-16V Ti-VCT, 1.6L Duratorq-TDCi	205/55 R 16	2.1 (31)	2.1 (31)	2.4 (35)	2.8 (41)
1.6L EcoBoost	205/55 R 16	2.2 (32)	2.1 (31)	2.4 (35)	2.8 (41)
1.0L EcoBoost, 1.6L Duratec-16V Ti-VCT, 1.6L EcoBoost, 2.0L Duratec-HE - MI4, 1.6L Duratorq-TDCi	215/55 R 16	2.1 (31)	2.1 (31)	2.4 (35)	2.8 (41)
2.0L Duratorq-TDCi - DW	215/55 R 16	2.3 (33)	2.1 (31)	2.6 (38)	2.8 (41)
1.0L EcoBoost, 1.6L Duratec-16V Ti-VCT, 1.6L EcoBoost, 2.0L Duratec-HE - MI4, 1.6L Duratorq-TDCi	215/50 R 17	2.1 (31)	2.1 (31)	2.4 (35)	2.8 (41)
2.0L Duratorq-TDCi - DW	215/50 R 17	2.3 (33)	2.1 (31)	2.6 (38)	2.8 (41)
1.6L Duratec-16V Ti-VCT, 1.6L EcoBoost, 2.0L Duratec-HE - MI4, 1.6L Duratorq-TDCi	235/40 R 18	2.1 (31)	2.1 (31)	2.4 (35)	2.8 (41)
2.0L Duratorq-TDCi - DW	235/40 R 18	2.3 (33)	2.1 (31)	2.6 (38)	2.8 (41)

Tyre pressures (cold tyres) - 2.0L EcoBoost - MI4

Wheel nut torque

Wheel type	Nm (lb-ft)
All	135 (100)

Temporary spare wheel - Up to 80 km/h (50 mph)

WARNING

Do not switch stability control off if you have fitted a temporary spare wheel to your vehicle.

Tyre size	Normal load		Full load	
	Front	Rear	Front	Rear
	bar (lbf/in²)	bar (lbf/in²)	bar (lbf/in²)	bar (lbf/in²)
T125/80 R 16	4.2 (61)	4.2 (61)	4.2 (61)	4.2 (61)
T125/90 R 16	4.2 (61)	4.2 (61)	4.2 (61)	4.2 (61)

Temporary spare wheel - Up to 120 km/h (75 mph)

WARNING

Do not switch stability control off if you have fitted a temporary spare wheel to your vehicle.

Tyre size	Normal load		Full load	
	Front	Rear	Front	Rear
	bar (lbf/in²)	bar (lbf/in²)	bar (lbf/in²)	bar (lbf/in²)
205/55 R 16	3 (44)	3 (44)	3 (44)	3 (44)

Up to 220 km/h (137 mph)

Tyre size	Normal load		Full load	
	Front	Rear	Front	Rear
	bar (psi)	bar (psi)	bar (psi)	bar (psi)
215/55 R 16*	2.4 (35)	2.4 (35)	2.4 (35)	2.8 (41)
215/50 R 17*	2.4 (35)	2.4 (35)	2.4 (35)	2.8 (41)
235/40 R 18	2.4 (35)	2.4 (35)	2.4 (35)	2.4 (35)

*Only fit snow chains to specified tyres.

Continuous speed in excess of 220 km/h (137 mph)

Tyre size	Normal load		Full load	
	Front	Rear	Front	Rear
	bar (psi)	bar (psi)	bar (psi)	bar (psi)
215/55 R 16	2.4 (35)	2.4 (35)	2.6 (38)	2.8 (41)
215/50 R 17	2.5 (36)	2.4 (35)	2.8 (41)	2.8 (41)
235/40 R 18	2.4 (35)	2.4 (35)	2.5 (36)	2.5 (36)

VEHICLE IDENTIFICATION PLATE

Note: *The vehicle identification plate design may vary to that shown.*

Note: *The information shown on the vehicle identification plate is dependant upon market requirements.*

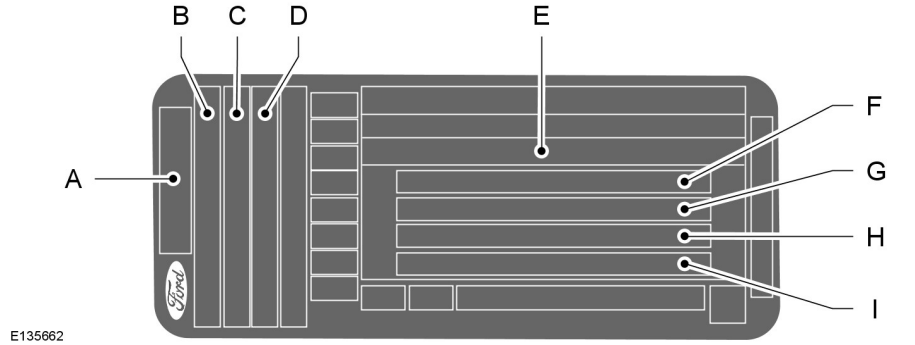

A	Model
B	Variant
C	Engine designation
D	Emission level
E	Vehicle identification number
F	Gross vehicle weight
G	Gross train weight
H	Maximum front axle weight
I	Maximum rear axle weight

The vehicle identification number and maximum weights are shown on a plate located on the lock side of the right-hand door aperture at the bottom.

VEHICLE IDENTIFICATION NUMBER

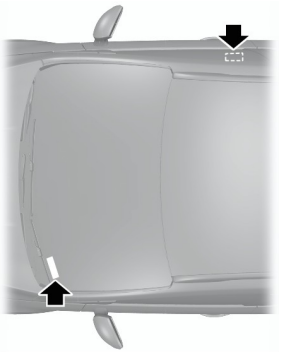

E87496

The vehicle identification number is stamped into the floor panel on the right-hand side, beside the front seat. It is also shown on the left-hand side of the instrument panel.

TECHNICAL SPECIFICATIONS

Vehicle dimensions

4-door

Dimension description	Dimension in mm (inches)
Maximum length	4534 (178.5)
Overall width including exterior mirrors	2010 (79.1)
Overall height - EC kerb weight	1451 - 1484 (57.1 - 58.4)
Wheelbase	2648 (104.3)
Front track	1544 - 1559 (60.8 - 61.4)
Rear track	1534 - 1549 (60.4 - 61)

5-door

Dimension description	Dimension in mm (inches)
Maximum length	4358 - 4412 (171.6 - 173.7)
Overall width including exterior mirrors	2010 (79.1)
Overall height - EC kerb weight	1451 - 1484 (57.1 - 58.4)
Wheelbase	2648 (104.3)
Front track	1544 - 1559 (60.8 - 61.4)
Rear track	1534 - 1549 (60.4 - 61)

Estate

Dimension description	Dimension in mm (inches)
Maximum length	4556 - 4606 (179.4 - 181.3)
Overall width including exterior mirrors	2010 (79.1)
Overall height - EC kerb weight	1472 - 1505 (58 - 59.3)

Dimension description	Dimension in mm (inches)
Wheelbase	2648 (104.3)
Front track	1544 - 1559 (60.8 - 61.4)
Rear track	1534 - 1549 (60.4 - 61)

Towing equipment dimensions

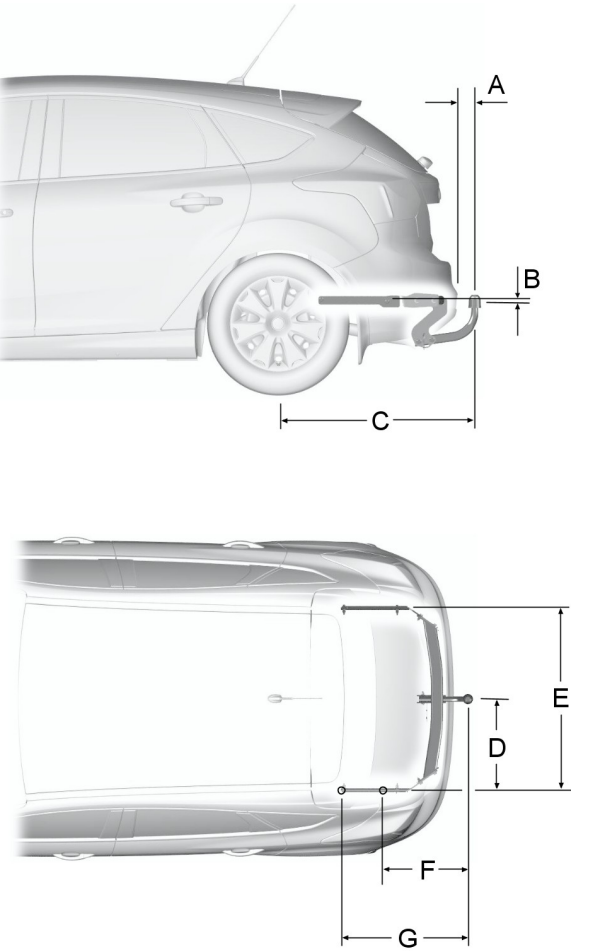

4-door

Item	Dimension description	Dimension in mm (inches)
A	Bumper – centre of tow ball	77 - 80 (3 - 3.1)
B	Attachment point – centre of tow ball	3 (0.1)
C	Wheel centre – centre of tow ball	1068 - 1071 (42 - 42.2)
D	Centre of tow ball – side member	515 (20.3)
E	Distance between side members	1030 (40.6)
F	Centre of tow ball – centre 1. attachment point	447 - 450 (17.6 -17.7)
G	Centre of tow ball – centre 2. attachment point	747 - 750 (29.4 - 29.5)

5-door

Item	Dimension description	Dimension in mm (inches)
A	Bumper – centre of tow ball	81 - 83 (3.2 - 3.3)
B	Attachment point – centre of tow ball	3 (0.1)
B	Attachment point – centre of tow ball (detachable trailer coupling)	18 (0.7)
C	Wheel centre – centre of tow ball	896 - 898 (35.3 - 35.4)
D	Centre of tow ball – side member	515 (20.3)
E	Distance between side members	1030 (40.6)
F	Centre of tow ball – centre 1. attachment point	396 - 398 (15.6 - 15.7)
G	Centre of tow ball – centre 2. attachment point	696 - 698 (27.4 - 27.5)

Estate

Item	Dimension description	Dimension in mm (inches)
A	Bumper – centre of tow ball	81 (3.2)
B	Attachment point – centre of tow ball	72 - 77 (2.8 - 3)
C	Wheel centre – centre of tow ball	1094 (43.1)
D	Centre of tow ball – side member	586 (23.1)
E	Distance between side members	1172 (46.1)
F	Centre of tow ball – centre 1. attachment point	474 (18.7)
G	Centre of tow ball – centre 2. attachment point	719 (28.3)

IMPORTANT AUDIO INFORMATION

WARNINGS

Due to technical incompatibility, recordable (CD-R) and rewritable (CD-RW) discs may not function correctly.

These CD radio units will play compact discs that conform to the International Red Book standard audio specification. Copy protected CDs from some manufacturers do not conform to this standard and playback cannot be guaranteed.

Dual format, dual sided discs (DVD Plus, CD-DVD format), adopted by the music industry, are thicker than normal CDs and consequently playback cannot be guaranteed, and jamming could occur. Irregular shaped CDs and CDs with a scratch protection film or self adhesive labels attached should not be used. Warranty claims, where this type of disc is found to be inside an audio unit returned for repair, will not be accepted.

All CD units are designed to play commercially pressed 12 cm audio compact discs only.

The audio unit may be damaged if unsuitable items like credit cards or coins are pushed inside the CD aperture.

Audio unit labels

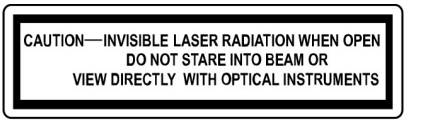

Disc labels

Audio CD

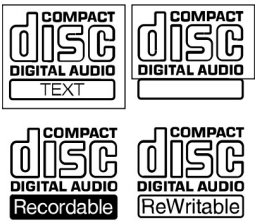

MP3

Note: *Units have an integrated multi function display situated above the CD aperture. This shows important information regarding control of your audio unit. Additionally, there are various icons placed around the display screen which light up when a function is active (for example CD, Radio or Aux.)*

Type 1

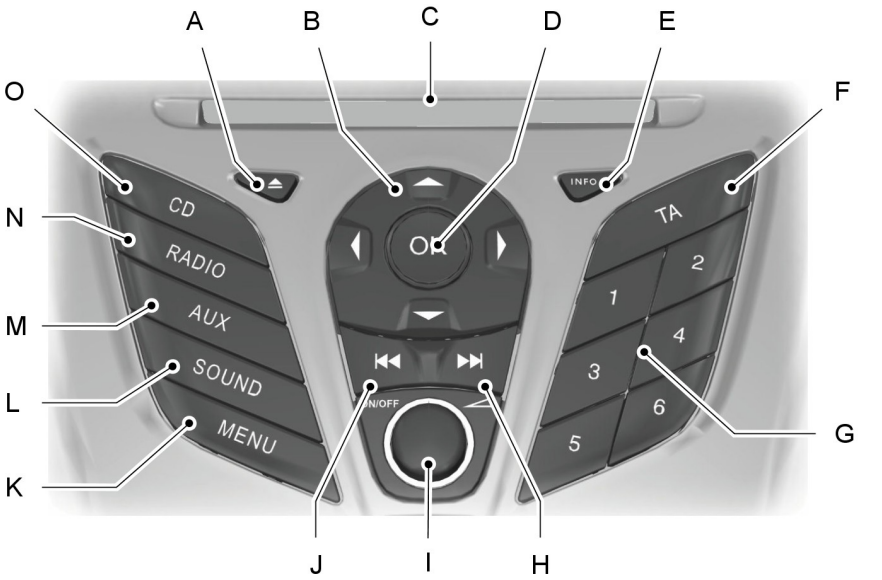

E130324

A **Eject:** Press the button to eject a CD. See **Compact Disc Player** (page 259).

B **Cursor arrows:** Press a button to scroll through on-screen choices.

C **CD slot:** Where you insert a CD. See **Compact Disc Player** (page 259).

D **OK:** Press the button to confirm on-screen selections.

E **INFO:** Press the button to access radio, CD, USB and IPod information.

F **TA:** Press the button to turn traffic announcements on or off and cancels announcements during an active announcement. See **Traffic information control** (page 255).

G **Numeric keypad:** Press the button to recall a previously stored station. To store a favorite station press and hold until the sound returns. See **Station preset buttons** (page 255).

H **Seek up:** Press the button to go to the next station up the radio frequency band or the next track on a CD. See **Station tuning control** (page 254). See **Track selection** (page 259).

I **On, Off and Volume:** Press the button to switch the audio system on or off. Turn the dial to adjust the volume.

J **Seek down:** Press the button to go to the next station down the radio frequency band or the previous track on a CD. See **Station tuning control** (page 254). See **Track selection** (page 259).

K **MENU:** Press the button to access different audio system features.

L **SOUND:** Press the button to adjust the sound settings for bass, treble, middle, balance and fade. See **Sound button** (page 254).

M **AUX:** Press the button to access the AUX and SYNC features, it will also cancel the menu or list browsing. See **Auxiliary Input Socket** (page 119). See **Auxiliary input (AUX IN) socket** (page 262).

N **RADIO:** Press the button to select different radio bands, it will also cancel the menu or list browsing. See **Audio unit operation** (page 254).

O **CD:** Press the button to change source to CD, it will also cancel the menu or list browsing. See **Compact Disc Player** (page 259).

Type 2

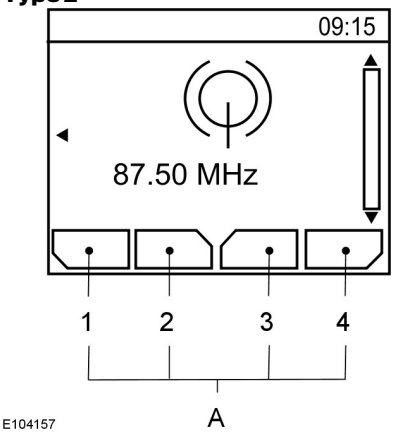

A Descriptions for function buttons 1-4

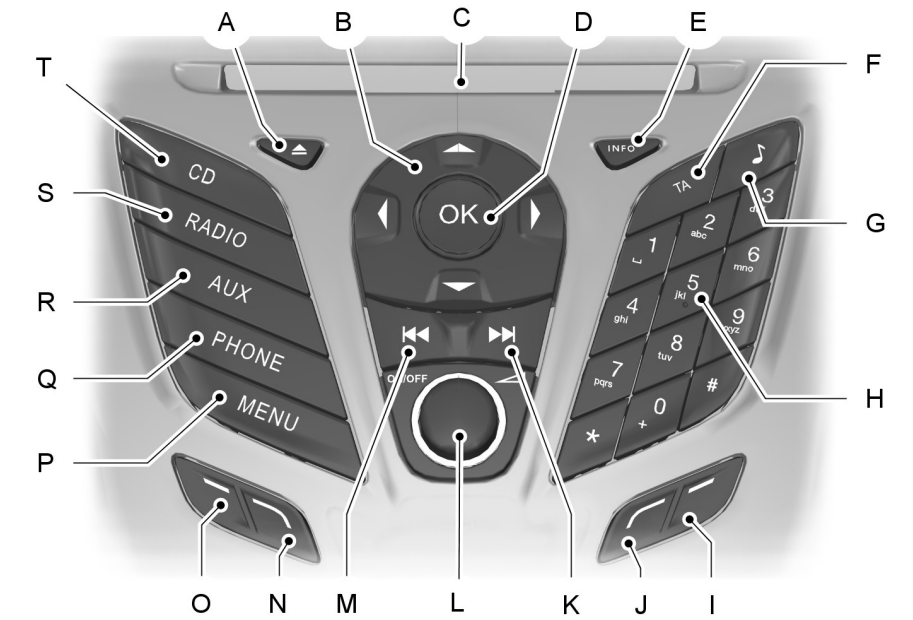

A **Eject:** Press the button to eject a CD. See **Compact Disc Player** (page 259).

B **Cursor arrows:** Press a button to scroll through on-screen choices.

C **CD slot:** Where you insert a CD. See **Compact Disc Player** (page 259).

D **OK:** Press the button to confirm on-screen selections.

E **INFO:** Press the button to access radio, CD, USB and IPod information.

F **TA:** Press the button to turn traffic announcements on or off and cancels announcements during an active announcement. See **Traffic information control** (page 255).

G **Sound:** Press the button to adjust the sound settings for bass, treble, middle, balance and fade. See **Sound button** (page 254).

H **Numeric keypad:** Press the button to recall a previously stored station. To store a favorite station press and hold until the sound returns. See **Using the telephone** (page 265). See **Station preset buttons** (page 255).

I **Function button 4:** Press the button to select different functions of the audio system depending on which mode (i.e. radio or CD) you are in.

J **Function button 3:** Press the button to select different functions of the audio system depending on which mode (i.e. radio or CD) you are in.

K **Seek up:** Press the button to go to the next station up the radio frequency band or the next track on a CD. See **Station tuning control** (page 254). See **Track selection** (page 259).

L **On, Off and Volume:** Press the button to switch the audio system on or off. Turn the dial to adjust the volume.

M **Seek down:** Press the button to go to the next station down the radio frequency band or the previous track on a CD. See **Station tuning control** (page 254). See **Track selection** (page 259).

N **Function button 2:** Press the button to select different functions of the audio system depending on which mode (i.e. radio or CD) you are in.

O **Function button 1:** Press the button to select different functions of the audio system depending on which mode (i.e. radio or CD) you are in.

P **MENU:** Press the button to access different audio system features.

Q **PHONE:** Press the button to access the phone feature of the SYNC system by pressing **PHONE** then **MENU**. See separate manual. See **Telephone** (page 264).

R **AUX:** Press the button to access the AUX and SYNC features, it will also cancel the menu or list browsing. See **Auxiliary Input Socket** (page 119). See **Auxiliary input (AUX IN) socket** (page 262). See **Connectivity** (page 284).

S **RADIO:** Press the button to select different radio bands, it will also cancel the menu or list browsing. See **Audio unit operation** (page 254).

T **CD:** Press the button to change source to CD, it will also cancel the menu or list browsing. See **Compact Disc Player** (page 259).

Function buttons 1 to 4 are context dependent, and change according to the current unit mode. Descriptions for the functions are shown at the bottom of the screen display.

Type 3

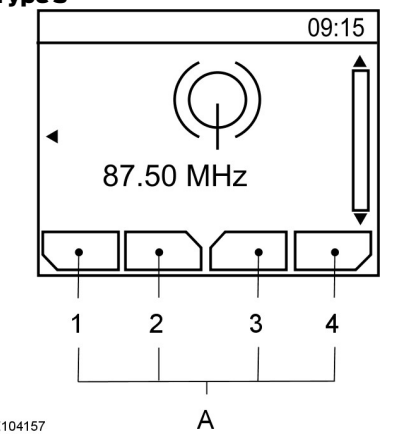

A Descriptions for function buttons 1-4

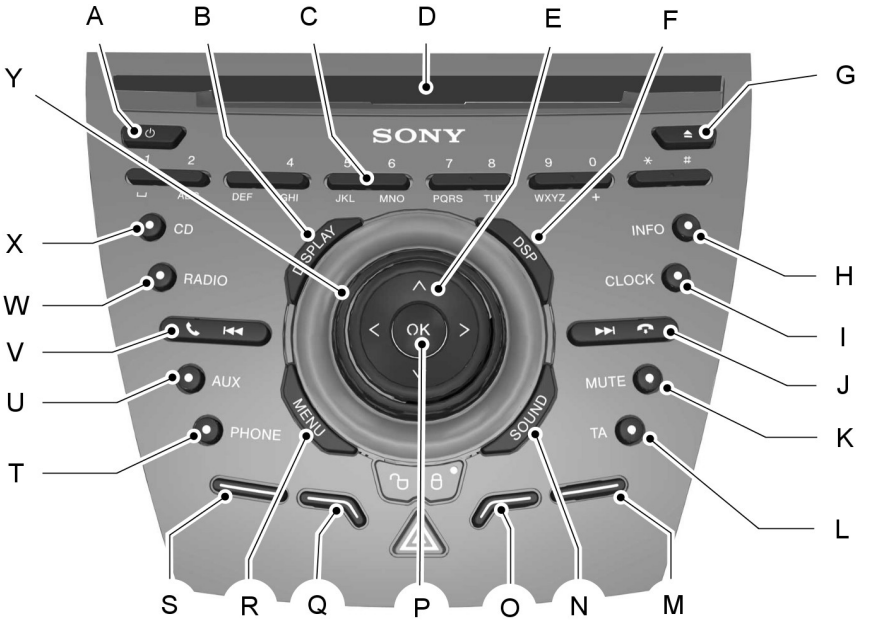

A **On, Off:** Press the button to switch the audio system on or off.

B **DISPLAY:** Press the button to turn on the display into idle mode.

C **Numeric keypad:** Press the button to recall a previously stored station. To store a favorite station press and hold until the sound returns. See **Using the telephone** (page 265). See **Station preset buttons** (page 255).

D **CD slot:** Where you insert a CD. See **Compact Disc Player** (page 259).

E **Cursor arrows:** Press the button to scroll through on-screen choices.

F **Digital signal processing:** Press the button to access the digital signal processing functions. See **Digital signal processing (DSP)** (page 257).

G **Eject:** Press the button to eject a CD. See **Compact Disc Player** (page 259).

H **INFO:** Press the button to access radio, CD, USB and IPod information.

I **CLOCK:** Press the button to access the clock functions.

J **Seek up:** Press the button to go to the next station up the radio frequency band or the next track on a CD when in CD mode. In phone mode, use the button to end a phone call. An incoming call can be rejected. See **Station tuning control** (page 254). See **Track selection** (page 259). See **Using the telephone** (page 265).

K **MUTE:** Press the button to turn the sound off, press again to turn the sound on.

L **TA:** Press the button to turn traffic announcements on or off and cancels announcements during an active announcement. See **Traffic information control** (page 255).

M **Function button 4:** Press the button to select different functions of the audio system depending on which mode (i.e. radio or CD) you are in.

N **SOUND:** Press the button to adjust the sound settings for bass, treble, middle, balance and fade. See **Sound button** (page 254).

O **Function button 3:** Press the button to select different functions of the audio system depending on which mode (i.e. radio or CD) you are in.

P **OK:** Press the button to confirm on-screen selections.

Q **Function button 2:** Press the button to select different functions of the audio system depending on which mode (i.e. radio or CD) you are in.

R **MENU:** Press the button to access different audio system features.

S **Function button 1:** Press the button to select different functions of the audio system depending on which mode (i.e. radio or CD) you are in.

T **PHONE:** Press the button to access the phone feature of the SYNC system by pressing **PHONE** then **MENU**. See separate manual. See **Telephone** (page 264).

U **AUX:** Press the button to access the AUX and SYNC features, it will also cancel the menu or list browsing. See **Auxiliary Input Socket** (page 119). See **Auxiliary input (AUX IN) socket** (page 262).

V **Seek down:** Press the button to go to the next station down the radio frequency band or the previous track on a CD, When in CD mode. In phone mode use the button to begin a phone call. An incoming phone call can be accepted. See **Station tuning control** (page 254). See **Track selection** (page 259). See **Using the telephone** (page 265).

W **RADIO:** Press the button to select different radio bands, it will also cancel the menu or list browsing. See **Audio unit operation** (page 254).

X **CD:** Press the button to change source to CD, it will also cancel the menu or list browsing. See **Compact Disc Player** (page 259).

Y **Volume:** Turn the dial to adjust the volume.

Function buttons 1 to 4 are context dependent, and change according to the current unit mode. Descriptions for the functions are shown at the bottom of the screen display.

SECURITY CODE

Each unit incorporates a unique code that is linked to the vehicle identification number (VIN). The system will automatically check that the audio unit and vehicle match before allowing operation.

If a security code message appears, please see your dealer.

ON/OFF CONTROL

Press the button with the ignition switched off. This will operate the audio unit for up to one hour.

If you switch the audio unit on before you switch the ignition off, the audio unit will switch off automatically after 10 minutes or when you open one of the front doors.

SOUND BUTTON

This will allow you to adjust the sound settings (for example bass and treble).

1. Press the sound button.
2. Use the up and down arrow buttons to select the required setting.
3. Use the left and right arrow buttons to make the necessary adjustment. The display indicates the level selected.
4. Press the **OK** button to confirm the new settings.

WAVEBAND BUTTON

Press the RADIO button to select from the wavebands available.

The selector can also be used to return to radio reception when you have been listening to another source.

Alternatively, press the left arrow button to display the available wavebands. Scroll to the required waveband and press OK.

STATION TUNING CONTROL

DAB service linking

Note: *The DAB service linking is as per default off.*

Note: *Service linking allows cross-referencing to other corresponding frequencies of the same station, for example FM and other DAB ensembles.*

Note: *The system will automatically change to another corresponding station if the current one becomes unavailable, for example when leaving the coverage area.*

Switching DAB service linking on and off. See **General Information** (page 79).

Seek tuning

Select a waveband and briefly press one of the seek buttons. The unit will stop at the first station it finds in the direction you have chosen.

Manual tuning

Type 1

1. Press the MENU button.
2. Select RADIO mode and then MANUAL TUNE.
3. Use the left and right arrow buttons to tune down or up the waveband in small increments or press and hold to increment quickly, until you find a station you want to listen to.
4. Press OK to continue listening to a station.

Type 2 and 3

1. Press function button 2.
2. Use the left and right arrow buttons to tune down or up the waveband in small increments or press and hold to increment quickly, until you find a station you want to listen to.
3. Press OK to continue listening to a station.

Scan tuning

Scan allows you to listen to a few seconds of each station detected.

Type 1

1. Press the MENU button.
2. Select RADIO mode and then SCAN.
3. Use the seek buttons to scan up or down the selected waveband.
4. Press OK to continue listening to a station.

Type 2 and 3

1. Press function button 3.
2. Use the seek buttons to scan up or down the selected waveband.
3. Press function button 3 again or OK to continue listening to a station.

STATION PRESET BUTTONS

This feature allows you to store your favourite stations so that they can be recalled by selecting the appropriate waveband and pressing one of the preset buttons.

1. Select a waveband.
2. Tune to the station required.
3. Press and hold one of the preset buttons. A progress bar and message will appear. When the progress bar completes the station has been stored. The audio unit will also mute momentarily as confirmation.

This can be repeated on each waveband and for each preset button.

Note: *When you drive to another part of the country, FM and DAB stations that broadcast on alternative frequencies, and are stored on preset buttons, may be updated with the correct frequency and station name for that area.*

AUTOSTORE CONTROL

Note: *This will store up to a maximum of the 10 strongest signals available, either from the AM or the FM waveband, and overwrite the previously stored stations. It can also be used to store stations manually in the same way as other wavebands.*

Note: *On type 3 you must select either FM AST or AM AST to use this function.*

- Press and hold function button 1 or the RADIO button.
- When the search is complete, sound is restored and the strongest signals are stored on the Autostore presets.

TRAFFIC INFORMATION CONTROL

Many stations that broadcast on the FM waveband have a TP code to signify that they carry traffic programme information.

Activating traffic announcements

Before you can receive traffic announcements, you must press either the TA or TRAFFIC button. A 'TA' display will appear to show the feature is switched on.

If you are already tuned to a station that broadcasts traffic information, 'TP' will also be displayed. Otherwise the unit will search for a traffic programme.

When traffic information is broadcast, it will automatically interrupt normal radio or CD playback and 'Traffic announcement (TA)' will appear in the display.

If a non-traffic station is selected or recalled using a preset button, the audio unit will remain on that station unless TA or TRAFFIC is turned off, then on again.

Note: *If TA is on and you select a preset or manual tune to a non TA station no traffic announcement will be heard.*

Note: *When you are listening to a non TA station and turn TA off and on again a TP seek will occur.*

Traffic announcement volume

Traffic announcements interrupt normal broadcasts at a preset minimum level that is usually louder than normal listening volumes.

To adjust the preset volume:

- Use the volume control to make the necessary adjustment during an incoming TA broadcast. The display will show the level selected.

Ending traffic announcements

The audio unit will return to normal operation at the end of each traffic announcement. To end the announcement prematurely, press TA or TRAFFIC during the announcement.

Note: *If you press TA or TRAFFIC at any other time it will switch all announcements off.*

AUTOMATIC VOLUME CONTROL

When available, automatic volume control (AVC) adjusts the volume level to compensate for engine noise and road speed noise.

1. Press the MENU button and select AUDIO.
2. Select AVC LEVEL or ADAPTIVE VOL.
3. Use the left or right arrow button to adjust the setting.
4. Press the OK button to confirm your selection.
5. Press the MENU button to return.

DIGITAL SIGNAL PROCESSING (DSP)

DSP occupancy

This feature takes into account the differences in distance from the various speakers in the vehicle to each seat. Select the sitting position for which the audio is to be correctly enhanced.

DSP equaliser

Select the music category that most suits your listening preference. The audio output will change to enhance the particular style of music chosen.

Changing the DSP settings

1. Press the MENU button.
2. Select AUDIO or AUDIO SETTINGS.
3. Scroll to the required DSP function.
4. Use the up and down arrow buttons to select the required setting.
5. Press the OK button to confirm your selection.
6. Press the MENU button to return.

NEWS BROADCASTS

Some audio units interrupt normal reception to broadcast news bulletins from stations on the FM waveband or radio data system (RDS) and enhanced other network (EON) linked stations, in the same way as traffic information is provided.

During news broadcasts, the display will indicate there is an incoming announcement. News interrupts are broadcast at the same preset volume level as traffic announcements.

1. Press the MENU button.
2. Select AUDIO or AUDIO SETTINGS.
3. Scroll to NEWS and turn on or off with the OK button.
4. Press the MENU button to return.

ALTERNATIVE FREQUENCIES

Many programmes that broadcast on the FM waveband have a programme identification (PI) code, which can be recognised by audio units.

If your radio has alternative frequencies (AF) tuning switched on and you move from one transmission area to another, this facility will search for and switch to a stronger station signal, if one can be found.

Under certain conditions, however, AF tuning may temporarily disrupt normal reception.

When selected, the unit continually evaluates signal strength and, if a better signal becomes available, the unit will switch to that alternative. It mutes while it checks a list of alternative frequencies and, if necessary, it will search once across the selected waveband for a genuine alternative frequency.

It will restore radio reception when it finds one or, if one is not found, the unit will return to the original stored frequency.

When selected, 'AF' will be shown in the display.

1. Press the MENU button.
2. Select AUDIO or AUDIO MENU.
3. Scroll to ALTERNAT FREQ. or ALTERNATIVE FREQ. and turn on or off with the OK button.
4. Press the MENU button to return.

REGIONAL MODE (REG)

Regional mode (REG) controls the behaviour of AF switching between regionally related networks of a parent broadcaster. A broadcaster may run a fairly large network across a large part of the country. At various times of the day this large network may be broken down into a number of smaller regional networks, typically centred on major towns or cities. When the network is not split into regional variants, the whole network caries the same programming.

Regional mode ON: This prevents 'random' AF switches when neighbouring regional networks are not carrying the same programming.

Regional mode OFF: This allows a larger coverage area if neighbouring regional networks are carrying the same programming, but can cause 'random' AF switches if they are not.

1. Press the MENU button.
2. Select AUDIO or AUDIO SETTINGS.
3. Scroll to RDS REGIONAL and turn on or off with the OK button.
4. Press the MENU button to return.

COMPACT DISC PLAYBACK

Note: *During playback, the display indicates the disc, track and time that has elapsed since the start of the track.*

During radio reception, press the CD button once to start CD playback.

Playback will start immediately after a disc is loaded.

TRACK SELECTION

- Press the seek up button once to move to the next track or press it repeatedly to access later tracks.
- Press the seek down button once to replay the current track. If pressed within two seconds of the start of a track, the previous track will be selected.
- Press the seek down button repeatedly to select previous tracks.
- Press the up or down arrow buttons, and using the OK button, select the required track.

Type 2 and 3

The desired track number may be entered using the numeric keypad. Dial the required track number until complete (for example 1 then 2 for track 12), or dial the number and directly press OK.

FAST FORWARD/REVERSE

Press and hold the seek down or up buttons to search backwards or forwards within the tracks on the disc.

SHUFFLE/RANDOM

Random track playback, also known as shuffle, plays all tracks on the CD in random order.

Type 1

1. Press the MENU button and select CD MODE.
2. Select SHUFFLE, which then enables the function to be selected on or off.

When an MP3 CD is playing, options include SHUFFLE for the whole CD, or to play all the tracks in the folder in a random order.

Type 2 and 3

Press function button 2.

Note: *When an MP3 CD is playing, options include SHUFFLE for the whole CD, or to play all the tracks in the folder in a random order. Repeat presses of function button 2 will toggle these options.*

Use the seek up or down button to select the next track to shuffle if required.

REPEAT COMPACT DISC TRACKS

Type 1

1. Press the MENU button and select CD MODE.
2. Select REPEAT, which then enables the function to be selected on or off. The track will replay once ended.

When an MP3 CD is playing, options include REPEAT for the track, or to repeat all the tracks in the folder.

Type 2 and 3

Press function button 1.

When an MP3 CD is playing, options include REPEAT for the track, or to repeat all the tracks in the folder. Repeat presses of function button 1 will toggle these options.

COMPACT DISC TRACK SCANNING

The SCAN function allows you to preview each track for approximately 5 seconds.

Type 1

Various scan modes are possible, according to the type of CD currently playing.

1. Press the MENU button and select CD MODE.
2. Select SCAN, which then enables the function to be selected on or off.

Note: *When an MP3 CD is playing, options include SCAN for the CD, or just the tracks in the folder.*

3. Press the OK button to stop the scan mode.

Type 2 and 3

1. Press function button 3.

Note: *When an MP3 CD is playing, options include SCAN for the CD, or just the tracks in the folder. Repeat presses of function button 3 will toggle these options.*

2. Press function button 3 again to stop the scan mode.

MP3 FILE PLAYBACK

Note: *Some copy protected audio files may not be read by the CD player.*

The CD player also supports MP3 and WMA format audio files.

When a CD containing audio is inserted into the CD player the disc's directory structure is read in. It may take a while before playback starts and is dependant on the quality of the disc.

MP3 tracks may be recorded on the CD in several ways. They can all be placed in the root directory like a conventional audio CD, or they can be placed in folders that may represent, for example, an album, an artist, or a genre.

Playing a multi session disc

The normal playing sequence on CD's with multiple folders is to play the tracks in the first folder, then the tracks in any folders nested inside the first folder, then move onto the second folder, and so on. For example, if folder 1 has folders 1a and 1b within it, and folder 2 contains folder 2a, the playing sequence will be folder 1, 1a, 1b, 2, 2a.

When the playback of a file is finished the playback of the other files in the same directory continues. Directory change takes place automatically when all files in the current directory have been played back.

MP3 DISPLAY OPTIONS

When an MP3 disc is playing, certain information encoded in each track can be displayed. Such information will normally include:

- The file name
- The folder name
- ID3 information which might be the album or artist's name.

The unit will normally show the file name that is playing. To select one of the other items of information, press the **INFO** button repeatedly until the required item is shown in the display.

Note: *If the ID3 information selected is unavailable,* ***NO MP3 TAG*** *will be shown in the display.*

CD text display options

When an audio disc with CD text is playing, limited information encoded in each track can be displayed. Such information will normally include:

- The disc name
- The artist name
- The track name.

Note: *These display options are selected in the same way as MP3 displays.* ***NO DISC NAME*** *or* ***NO TRACK NAME*** *will be shown in the display if no information has been encoded.*

ENDING COMPACT DISC PLAYBACK

To restore radio reception on all units:

- Press the RADIO button.

Note: *This will not eject the CD; the disc will merely pause at the point where radio reception was restored.*

To resume CD playback, press the CD button again.

Note: *For optimum performance when using any auxiliary device set the volume on the device high. This will reduce audio interference when charging the device via the vehicle power supply socket.*

When fitted the Auxiliary input (AUX IN) socket permits an auxiliary device, such as an MP3 player, to be linked into the vehicle audio system. Output can be played through the vehicle speakers.

To connect an auxiliary device, plug it into the AUX IN socket using a 3.5 mm conventional audio jack connector.

Select the auxiliary input via the AUX or MENU button and playback will be heard through the vehicle speakers. LINE IN or LINE IN ACTIVE will appear in the vehicle audio unit display. Volume, treble and bass can be adjusted on the vehicle audio unit as normal.

The vehicle audio unit buttons can also be used to restore playback from the vehicle audio unit, while the auxiliary device remains connected.

AUDIO TROUBLESHOOTING

Audio unit display	Rectification
PLEASE CHECK CD	General error message for CD fault conditions, such as cannot read the CD, data-CD inserted, etc. Ensure disc is loaded correct way up. Clean and re-try, or replace disc with known music disc. If error persists contact your dealer.
CD DRIVE MALFUNCTION	General error message for CD fault conditions such as possible mechanism fault.
CD DRIVE HIGH TEMP	Ambient temperature too hot – unit will not work until it has cooled down.
IPOD ERROR READING DEVICE	General error message for iPod fault conditions, such as cannot read the data. Ensure iPod is inserted correctly. If error persists contact your dealer.

GENERAL INFORMATION

CAUTION

Using the system with the engine off will drain the battery.

This section describes the functions and features of the Bluetooth mobile phone hands free system.

The Bluetooth mobile phone part of the system provides interaction with the audio or navigation system and your mobile phone. It allows you to use the audio or navigation system to make and receive calls without having to hold your mobile phone.

Compatibility of phones

CAUTION

As no common agreement exists, mobile phone manufacturers are able to implement a variety of profiles in their Bluetooth devices. Because of this, an incompatibility can occur between the phone and hands-free system, which in some cases may significantly degrade the system performance. To avoid this situation, only recommended phones should be used.

Please visit the website **www.ford-mobile-connectivity.com** for full details.

BLUETOOTH SETUP

Before you can use your telephone with your vehicle it must be bonded to the vehicle telephone system.

Handling of phones

Up to six Bluetooth devices can be bonded to the vehicle system.

Note: *If there is an ongoing call when the phone in use is selected as the new active phone, the call is transferred to the vehicle audio system.*

Note: *Even if connected to the car system, your phone can still be used in the usual way.*

Requirements for Bluetooth connection

The following are required before a Bluetooth phone connection can be made.

1. The Bluetooth feature must be activated on the phone and on the audio unit. Make sure the Bluetooth menu option in the audio unit is set to **ON**. For information on phone settings, refer to your phone user guide.
2. In the Bluetooth menu on your phone, search for **Ford Audio** and select it.
3. Enter the code number shown on the vehicle display using the phone keypad. If no code number is shown on the display, enter the Bluetooth PIN number 0000 using the phone keypad. Now enter the Bluetooth PIN number shown on the vehicle display.
4. If your mobile phone asks you to authorize the automatic connection, select **YES**.

Note: *A phone call will be disconnected if the audio unit is switched off. If the ignition key is turned to the off position the phone call will remain in progress.*

TELEPHONE SETUP

Phonebook

Note: *It may be necessary to confirm phonebook access to the Bluetooth system via the mobile phone.*

After start up access to the phonebook list can be delayed for several minutes, depending upon the size.

Phonebook categories

The category is indicated as an icon:

Phone

Mobile

Home

Office

Making a phone an active phone

Note: *If there is an ongoing call when the phone in use is selected as the new active phone, the call is transferred to the vehicle audio system.*

When using the system for the first time, no phone is connected to the system.

After switching on the ignition and the audio unit, the Bluetooth phone must be bonded to the system. See **Bluetooth setup** (page 264).

After bonding a Bluetooth phone to the system, this becomes the active phone. For further information refer to the phone menu.

Select the phone from the active phone menu.

Turning the ignition and radio back on again, the last active phone is picked up by the system.

Note: *In some cases the Bluetooth connection must also be confirmed on the phone.*

Bond another Bluetooth phone

Bond a new Bluetooth phone as described in the requirements for a Bluetooth connection.

Phones stored in the system are accessible by using the phone list on the audio unit.

Note: *A maximum of six devices may be bonded. If six Bluetooth devices have already been bonded, one of these has to be debonded in order to bond a new device.*

TELEPHONE CONTROLS

Remote control

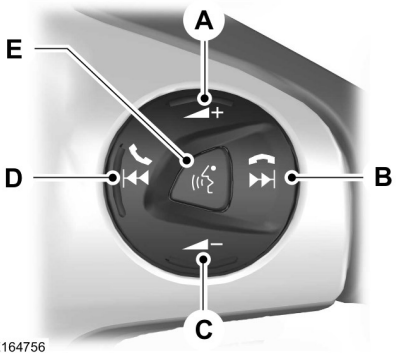

A	Volume up
B	End call
C	Volume down
D	Receive call
E	Voice button

USING THE TELEPHONE

Note: *Refer to your audio guide for details of the controls. See **Audio unit overview** (page 245).*

Note: *You can exit the phone menu by pressing any source button **CD**, **RADIO** or **AUX**.*

Note: *When referred to, the use of the up/down arrow buttons, seek up and seek down buttons, and the **OK** button can be used on either the steering wheel or the audio unit.*

This chapter describes the phone functions of the audio unit.

An active phone must be present.

Even if connected to the audio unit, your phone can still be used in the usual way.

Making a call

Dialling a number using voice control

Phone numbers can be dialled using voice control. See **Telephone commands** (page 276).

Dialling a number using the address book

1. Press the **PHONE** button.
2. Press the up/down arrow buttons until **PHONEBOOK** is shown.
3. Press the **OK** button.

Note: *You can also use the telephone keypad to select the first letter of the entry you are looking for. Press the relevant number that corresponds to the letter repeatedly until the required letter is displayed.*

4. Press the up/down arrow buttons to select the desired phone number.

Note: *Press and hold the up/down arrow buttons to search forwards or backwards within the phonebook.*

5. Press the **OK** button to dial the selected phone number.

Dialling a number using the telephone keypad

1. Press the **PHONE** button.
2. Dial the number using the telephone keypad on the audio unit.
3. Press the **OK** button.

Note: *If you enter an incorrect digit whilst entering a phone number, press function button 3 to erase the last digit. A long press will erase the complete string of digits.*

Ending a call

Calls can be ended by:

- pressing the seek up button
- pressing the **OK** button
- pressing function button 4.

Redialling a number

1. Press the **PHONE** button.
2. Press the up/down arrow buttons until **CALL LISTS** is displayed.
3. Press the **OK** button.

Note: *If the active phone does not provide a call out list, the last outgoing call number/entry can be redialled.*

4. Press the up/down buttons to select the desired call list.
5. Press the **OK** button.
6. Press the up/down buttons to select the desired phone number.
7. Press the **OK** button.

Redialling the last dialled number

1. Press the **PHONE** button.
2. Press the up/down arrow buttons until **REDIAL** is displayed.
3. Press the **OK** button.

Receiving an incoming call

Accepting an incoming call

Incoming calls can be accepted by pressing the seek down button, or by pressing the **OK** button.

Rejecting an incoming call

Incoming calls can be rejected by:

- pressing the seek up button, or
- pressing the arrow down button to highlight **REJECT** and then pressing the **OK** button.

Receiving a second incoming call

Note: *The second incoming call function must be activated in your phone.*

If there is an incoming call whilst there is an ongoing call, a beep will be heard and you will have the option to end the active call and to accept the incoming call.

Accepting a second incoming call

Note: *The first incoming call will be disconnected and replaced by the second incoming call.*

Second incoming calls can be accepted by pressing the seek down button on the steering wheel or on the audio unit, or by pressing the **OK** button on the audio unit.

Rejecting a second incoming call

Second incoming calls can be rejected by:

- pressing the seek up button, or
- pressing the arrow down button to highlight **REJECT** and then pressing the **OK** button.

Second incoming calls can be rejected by pressing function button 4.

Muting the microphone

Note: *During a call, it is possible to mute the microphone. Whilst muted, confirmation will appear in the display.*

Press function button 1. Press the button once again to turn this function off.

Changing the active phone

Note: *Phones must be bonded to the system before they can be made active.*

Note: *After bonding a phone to the system, this becomes the active phone.*

1. Press the **PHONE** button.
2. Press the up/down buttons until **SELECT PHONE** is shown.
3. Press the **OK** button.
4. Scroll through the different stored phones by using the up/down buttons to display the bonded phones.
5. Press the **OK** button to select the phone which is to be the active phone.

Debonding a bonded phone

A bonded phone can be deleted from the system at any time, unless a phone call is in progress.

1. Press the **PHONE** button.
2. Press the up/down buttons until **SELECT PHONE** is shown.
3. Press the **OK** button.
4. Press the up/down buttons to highlight the required phone.
5. Press function button 1.

PRINCIPLE OF OPERATION

CAUTION

Using the system with the engine off will drain the battery.

Voice recognition enables operation of the system without the need to divert your attention from the road ahead in order to change settings, or receive feedback from the system.

Whenever you issue one of the defined commands with the system active, the voice recognition system converts your command into a control signal for the system. Your inputs take the form of dialogues or commands. You are guided through these dialogues by announcements or questions.

Please familiarise yourself with the functions of the system before using voice recognition.

Supported commands

The voice control system allows you to control the following vehicle functions:

- Bluetooth phone
- radio
- CD Player
- external device (USB)
- external device (iPod)
- automatic climate control

System response

As you work through a voice session the system will prompt you with a beep tone each time the system is ready to proceed.

Do not try to give any commands until the beep tone has been heard. The voice control system will repeat each spoken command back to you.

If you are not sure how to continue say "HELP" for assistance or "CANCEL" if you do not wish to continue.

The "HELP" function provides only a subset of the available voice commands. Detailed explanations of all possible voice commands can be found on the following pages.

Voice commands

All voice commands should be given using a natural speaking voice, as if speaking to a passenger or on the phone. Your voice level should be dependant on the surrounding noise level inside or outside the vehicle but do not shout.

USING VOICE CONTROL

System operation

The order and content of the voice controls are given in the following lists. The tables show the sequence of user voice commands and system responses for each available function.

< > indicates a number or stored name tag to be inserted by the user.

Short cuts

There are a number of voice command short cuts available, which allow you to control some vehicle features without having to follow the complete command menu. These are:

- Phone: CALL or DIAL NAME, DIAL NUMBER, and REDIAL.
- Phone: CALL FIRST NAME, LAST NAME at LOCATION. Example: Call Fred Bloggs at home.
- Automatic climate control: TEMPERATURE, AUTO MODE, DEFROSTING ON, DEMISTING ON, DEFROSTING OFF and DEMISTING OFF.

- Radio: TUNE NAME.
- External device (USB and iPod): TRACK.

Start communicating with the system

Before you can start talking to the system you first have to press the **VOICE** button for each operation and wait until the system answers with a beep. See **Using voice control** (page 268).

Press the button again to cancel the voice session.

Name tag

The name tag functionality can support the phone, audio and navigation features by using the "STORE NAME" function. You can assign name tags to items such as favourite radio stations and personal phone contacts. See **Audio unit commands** (page 269). See **Telephone commands** (page 276).

- Store up to 20 name tags per function.
- The average recording time for each name tag is approximately 2-3 seconds.

AUDIO UNIT COMMANDS

CD Player

You can control playback directly by voice control.

Overview

The overview below shows the available voice commands. The following lists will give further information about the complete command menu in selected examples.

"CD PLAYER"
"HELP"
"PLAY"
"TRACK"*
"SHUFFLE ALL"
"SHUFFLE FOLDER"**
"SHUFFLE OFF"
"REPEAT FOLDER"**
"REPEAT TRACK"
"REPEAT OFF"

* Can be used as a shortcut.

** Only available if the CD contains audio data files like MP3.

Track

You can choose a track on your CD directly.

Steps	User says	System answer
1	"CD PLAYER"	"CD PLAYER"
2	"TRACK"*	"TRACK NUMBER PLEASE"
3	"<a number between 1 and 99>"**	"TRACK <number>"

* Can be used as a shortcut.

** Additionally, numbers can be spoken as up to four single digits (for example "2", "4", "5" for track 245)

Shuffle all

To set random playback.

Steps	User says	System answer
1	"CD PLAYER"	"CD PLAYER"
2	"SHUFFLE ALL"	

Radio

The radio voice commands support the functionality of the radio and allow you to tune radio stations by voice control.

Overview

The overview below shows the available voice commands. The following lists will give further information about the complete command menu.

"RADIO"
"HELP"
"AM"
"FM"
"TUNE NAME"*
"DELETE NAME"
"DELETE DIRECTORY"
"PLAY DIRECTORY"

"RADIO"
"STORE NAME"
"PLAY"

* Can be used as a shortcut.

Tune frequency

This function allows you to tune your radio by voice commands.

Steps	User says	System answer
1	"RADIO"	"RADIO"
2	"AM"	"AM FREQUENCY PLEASE"
	"FM"	"FM FREQUENCY PLEASE"
3	"<frequency>"*	"TUNE <frequency>"

* The frequency may be entered in a variety of ways. Refer below for representative examples.

FM band: 87.5 - 108.0 in increments of 0.1

- "Eighty nine point nine" (89.9)
- "Ninety" (90.0)
- "One hundred point five" (100.5)
- "One zero one point one" (101.1)
- "One zero eight" (108.0)

AM/MW band: 531 - 1602 in increments of 9

AM/LW band: 153 - 281 in increments of 1

- "Five thirty one" (531)
- "Nine hundred" (900)
- "Fourteen forty" (1440)
- "Fifteen zero three" (1503)
- "Ten eighty" (1080)

Store name

If you have tuned a radio station, you can store it with a name in the directory.

Steps	User says	System answer
1	"RADIO"	"RADIO"
2	"STORE NAME"	"STORE NAME" "NAME PLEASE"
3	"<name>"	"REPEAT NAME PLEASE"
4	"<name>"	"STORING NAME"

Steps	User says	System answer
		"<name> STORED"

Tune name

This function allows you to call up a stored radio station.

Steps	User says	System answer
1	"RADIO"	"RADIO"
2	"TUNE NAME"*	"NAME PLEASE"
3	"<name>"	"TUNE <name>"

* Can be used as a shortcut.

Delete name

This function allows you to delete a stored radio station.

Steps	User says	System answer
1	"RADIO"	"RADIO"
2	"DELETE NAME"	"NAME PLEASE"
3	"<name>"	"DELETE <name>" "CONFIRM YES OR NO"
4	"YES"	"DELETED"
	"NO"	"COMMAND CANCELLED"

Play directory

This function allows you to let the system tell you all of the stored radio stations.

Steps	User says	System answer
1	"RADIO"	"RADIO"
2	"PLAY DIRECTORY"	"PLAY <DIRECTORY>"

Delete directory

This function allows you to delete all stored radio stations at once.

Steps	User says	System answer
1	"RADIO"	"RADIO"
2	"DELETE DIRECTORY"	"DELETE DIRECTORY" "CONFIRM YES OR NO"
3	"YES"	"RADIO DIRECTORY DELETED"
	"NO"	"COMMAND CANCELLED"

Play

This function switches the audio source to the radio mode.

Steps	User says	System answer
1	"RADIO"	"RADIO"
2	"PLAY"	

Auxiliary input

This function allows you to switch the audio source to the attached auxiliary input device.

Steps	User says	System answer
1	"EXTERNAL DEVICE"	"EXTERNAL DEVICE"
2	"LINE IN"	"LINE IN"

External devices - USB

These voice commands support the functionality of an external USB device which may be connected to the audio unit.

Overview

The overview below shows the available voice commands. The following lists will give further information about the complete command menu in selected examples.

"EXTERNAL DEVICE", "USB"
"HELP"
"PLAY"
"TRACK"*
"PLAYLIST"**
"FOLDER"**
"SHUFFLE ALL"
"SHUFFLE FOLDER"
"SHUFFLE PLAYLIST"
"SHUFFLE OFF"
"REPEAT TRACK"
"REPEAT FOLDER"
"REPEAT OFF"

* Can be used as a shortcut.

** Playlists and folders activated by voice control must be assigned special filenames. See **General Information** (page 284).

USB play

This function allows you to switch the audio source to the attached USB device.

Steps	User says	System answer
1	"EXTERNAL DEVICE"	"EXTERNAL DEVICE"
2	"USB"	"USB"
3	"PLAY"	

USB Track

You can choose a track on your USB device directly.

Steps	User says	System answer
1	"EXTERNAL DEVICE"	"EXTERNAL DEVICE"
2	"USB"	"USB"
3	"TRACK"	"TRACK NUMBER PLEASE"
4	"<a number between 1 and 99>"*	"TRACK <number>"

* Additionally, numbers can be spoken as up to four single digits (for example "2", "4", "5" for track 245)

External devices - iPod

These voice commands support the functionality of an iPod which may be connected to the audio unit.

Overview

The overview below shows the available voice commands. The following lists will give further information about the complete command menu in selected examples.

"EXTERNAL DEVICE", "IPOD"
"HELP"
"PLAY"
"TRACK"*
"PLAYLIST"**
"SHUFFLE ALL"
"SHUFFLE PLAYLIST"
"SHUFFLE OFF"
"REPEAT TRACK"
"REPEAT OFF"

* Can be used as a shortcut.

** Playlists activated by voice control must be assigned special filenames. See **General Information** (page 284).

iPod Track

You can choose a track off the all titles list of your iPod directly.

Steps	User says	System answer
1	"EXTERNAL DEVICE"	"EXTERNAL DEVICE"
2	"IPOD"	"IPOD"
3	"TRACK"*	"TRACK NUMBER PLEASE"
4	"<a number between 1 and 99>"**	"TRACK <number>"

* Can be used as a shortcut.

** Additionally, numbers can be spoken as up to five single digits (for example "5", "2", "4", "5", "3" for track 52453), to a limit of 65535.

iPod playlist

You can choose a playlist from your iPod directly.

Steps	User says	System answer
1	"EXTERNAL DEVICE"	"EXTERNAL DEVICE"
2	"IPOD"	"IPOD"
3	"PLAYLIST"*	"PLAYLIST NUMBER PLEASE"
4	"<a number between 1 and 10>"	"PLAYLIST <number>"

* Playlists activated by voice control must be assigned special filenames. See **General Information** (page 284).

TELEPHONE COMMANDS

Phone

Your phone system allows you to create an additional phonebook. The stored entries can be dialled by voice control. Phone numbers stored by using voice control are stored on the vehicle system and not in your phone.

Overview

The overview below shows the available voice commands. The following lists will give further information about the complete command menu in selected examples.

"PHONE"
"HELP"
"MOBILE NAME"*
"DIAL NUMBER"*
"DIAL NAME"*
"DELETE NAME"
"DELETE DIRECTORY"
"PLAY DIRECTORY"
"STORE NAME"
"REDIAL"*
"ACCEPT CALLS"
"REJECT CALLS"

* Can be used as a shortcut.

Phone functions

Dial number

Phone numbers can be dialled after giving the name tag voice command.

Steps	User says	System answer
1	"PHONE"	"PHONE"
2	"DIAL NUMBER"*	"NUMBER PLEASE"
3	"<phone number>"	"<phone number> CONTINUE?"
4	"DIAL"	"DIALLING"
	"CORRECTION"	"<repeat last part of number> CONTINUE?"

* Can be used as a shortcut.

Dial name

Phone numbers can be dialled after giving the name tag voice command.

Steps	User says	System answer
1	"PHONE"	"PHONE"
2	"DIAL NAME"*	"NAME PLEASE"
3	"<name>"	"DIAL <name>" "CONFIRM YES OR NO"
4	"YES"	"DIALLING"
	"NO"	"COMMAND CANCELLED"

* Can be used as a shortcut.

Redial

This function allows you to redial the last dialled phone number.

Steps	User says	System answer
1	"PHONE"	"PHONE"
2	"REDIAL"*	"REDIAL" "CONFIRM YES OR NO"
3	"YES"	"DIALLING"
	"NO"	"COMMAND CANCELLED"

* Can be used as a shortcut.

Mobile name

This function allows you to access phone numbers stored with a name tag in your mobile phone.

Steps	User says	System answer
1	"PHONE"	"PHONE"
2	"MOBILE NAME"*	"MOBILE NAME" "<phone dependent dialogue>"

* Can be used as a shortcut.

DTMF (Tone dialling)

This function transfers spoken numbers into DTMF tones. For example, to make a remote enquiry to your home answering machine or to enter a PIN number etc.

Note: *DTMF can only be used during an ongoing call. Operate the VOICE button and wait for the system prompt.*

Can only be used with vehicles installed with a dedicated VOICE button.

Steps	User says	System answer
1		"NUMBER PLEASE"
2	"<numbers 1 to 9, zero, hash, star>"	

Create a phonebook

Store name

New entries can be stored with the "STORE NAME" command. This feature can be used to dial a number by calling up the name instead of the full phone number.

Steps	User says	System answer
1	"PHONE"	"PHONE"
2	"STORE NAME"	"STORE NAME" "NAME PLEASE"
3	"<name>"	"REPEAT NAME PLEASE"
4	"<name>"	"STORING NAME" "<name> STORED" "NUMBER PLEASE"
5	"<phone number>"	"<phone number>"
6	"STORE"	"STORING NUMBER" "<phone number>" "NUMBER STORED"

Delete name

Stored names can also be deleted from the directory.

Steps	User says	System answer
1	"PHONE"	"PHONE"
2	"DELETE NAME"	"NAME PLEASE"
3	"<name>"	"DELETE <name>" "CONFIRM YES OR NO"
4	"YES"	"<name> DELETED"
	"NO"	"COMMAND CANCELLED"

Play directory

Use this function to let the system tell you all stored entries.

Steps	User says	System answer
1	"PHONE"	"PHONE"
2	"PLAY DIRECTORY"	"PLAY DIRECTORY"

Delete directory

This function allows you to delete all entries in one go.

Steps	User says	System answer
1	"PHONE"	"PHONE"
2	"DELETE DIRECTORY"	"DELETE DIRECTORY" "CONFIRM YES OR NO"
3	"YES"	"DIRECTORY DELETED"
	"NO"	"COMMAND CANCELLED"

Main settings

Reject calls

Calls can be set to be automatically rejected using voice control.

Steps	User says	System answer
1	"PHONE"	"PHONE"
2	"REJECT CALLS"	"REJECT CALLS"
	"ACCEPT CALLS"*	"ACCEPT CALLS"

* use this command to turn the reject mode off

CLIMATE CONTROL COMMANDS

Climate

The climate voice commands supports the functionality of the fan speed, temperature and mode settings. Not all functions are available on all vehicles.

Overview

The overview below shows the available voice commands. The following lists will give further information about the complete command menu in selected examples.

"CLIMATE"
"HELP"
"FAN"*
"DEFROSTING/DEMISTING ON"*
"DEFROSTING/DEMISTING OFF"*
"TEMPERATURE"*
"AUTO MODE"*

* Can be used as a shortcut. On vehicles fitted with an English language module the "FAN" shortcut is not available.

Fan

This function allows you to adjust the fan speed.

Steps	User says	System answer
1	"CLIMATE"	"CLIMATE"
2	"'FAN"*	"FAN SPEED PLEASE"
3	"MINIMUM"	"FAN MINIMUM"
	"<a number between 1 and 7>"	"FAN <number>"
	"MAXIMUM"	"FAN MAXIMUM"

* Can be used as a shortcut. On vehicles fitted with an English language module the "FAN" shortcut is not available.

Defrosting/Demisting

Steps	User says	System answer
1	"CLIMATE"	"CLIMATE"
2	"DEFROSTING ON/DEMISTING ON"*	"DEFROSTING ON/DEMISTING ON"
	"DEFROSTING OFF/DEMISTING OFF"*	"DEFROSTING OFF/DEMISTING OFF"

* Can be used as a shortcut.

Temperature

This function allows you to adjust the temperature.

Steps	User says	System answer
1	"CLIMATE"	"CLIMATE"
2	"TEMPERATURE"*	"TEMPERATURE PLEASE"
3	"MINIMUM"	"TEMPERATURE MINIMUM"

Steps	User says	System answer
	"<a number between 15 and 29 ºC with 0.5 increments>" or "<a number between 59 and 84 ºF>"	"TEMPERATURE <number>"
	"MAXIMUM"	"TEMPERATURE MAXIMUM"

* Can be used as a shortcut.

Auto mode

Steps	User says	System answer
1	"CLIMATE"	"CLIMATE"
2	"AUTO MODE"*	"AUTO MODE"

* Can be used as a shortcut. Can be deactivated by selecting a different temperature or fan speed.

GENERAL INFORMATION

CAUTIONS

Take care when handling external devices with exposed electrical connectors (such as the USB plug). Always replace the protective cap/shield when possible. There may be a risk of electrostatic discharge causing damage to the device.

Do not touch or handle the USB socket in the vehicle. Cover the socket when not in use.

Only use USB Mass-Storage device compliant devices.

Always switch your audio unit to a different source (for example the radio) before unplugging the USB device.

Do not install or connect USB hubs or splitters.

Note: *The system is only designed to recognize and read suitable audio files from a USB device that conforms to the USB Mass-Storage device class or an iPod. Not all available USB devices can be guaranteed to function with the system.*

Note: *It is possible to connect compatible devices with a trailing USB lead as well as those that plug into the vehicle USB socket directly (for example USB memory sticks and pen drives).*

Note: *Some USB devices with a higher power consumption may not be compatible (for example some larger hard drives).*

Note: *Access time to read the files on the external device will vary depending upon factors such as the file structure, size and device content.*

The system supports a range of external devices, to fully integrate with your audio unit via the USB and auxiliary input sockets. Once connected, control of the external device is possible via the audio unit.

A list of typical compatible devices are shown below:

- USB memory sticks
- USB portable hard drives
- Some MP3 players with USB connection
- iPod media players (refer to **www.ford-mobile-connectivity.com** for latest compatibility list).

The system is USB 2.0 full speed compatible, USB 1.1 host compliant and supports FAT 16/32 file systems.

Information on audio file structures for external devices

USB

Create only a single partition on the USB device.

We recommend that you put MP3 files in a folder.

If playlists are created, they must contain correct file paths referenced to the USB device. It is recommended to create the playlist after the audio files have been transferred to the USB device.

Playlists must be created in .m3u format.

Audio files must be in .mp3 format.

Do not exceed the following limits:

- 1000 items per folder (files, folders and playlists)
- 5000 folders per USB device (including playlists)
- 8 subfolder levels.

To enable voice control for custom playlists and folders, follow the procedure below:

- Create folders named with the structure **"Ford<*>"** where <*> is a number 1-10. For example **"Ford3"** without an extension.
- Create playlists named with the structure **"Ford<*>.m3u"** where <*> is a number 1-10. For example **"Ford5.m3u"** without any space between **"Ford"** and the number.

Thereafter, custom folders and playlists will be selectable with voice control.

iPod

To enable voice control for custom playlists, create playlists named with the structure **"Ford<*>"** where <*> is a number 1-10. For example **"Ford7"** without any space between **"Ford"** and the number.

Thereafter, playlists will be selectable with voice control.

CONNECTING AN EXTERNAL DEVICE

External devices may be connected using the auxiliary input socket and the USB port.

You can find the socket in the centre console.

Select the auxiliary input via the **CD/AUX** button and playback will be heard through the vehicle speakers.

CONNECTING AN EXTERNAL DEVICE - VEHICLES WITH: BLUETOOTH

Connecting a Bluetooth audio device

CAUTION

As various standards exist, manufacturers are able to implement a variety of profiles in their Bluetooth devices. Because of this, an incompatibility can occur between the Bluetooth device and the system, which in some cases may limit system functionality. To avoid this situation, only recommended devices should be used.

Please visit the website **www.ford-mobile-connectivity.com** for full details.

Bonding the device

To connect the device to the system follow the same procedure as for Bluetooth hands free phones. See **Bluetooth setup** (page 264).

Operating the device

Note: *The seek buttons and file information will only work on certain phones and devices.*

Select Bluetooth audio as the active source.

1. Select **AUX**.
2. Press the up and down arrow buttons to select the desired function.
3. Press the **OK** button.

Tracks can be accessed by skipping forwards and backwards using the steering wheel controls, or directly from the audio unit controls.

Audio control

Press the seek up and down keys to skip backwards and forwards through tracks.

Press and hold the seek keys to enable fast rewind/fast forward through track content.

Press the **INFO** button or function button 4 to display the following:

- Title.
- Artist.
- Album.
- File name.

USING A USB DEVICE

Various icons are used to identify types of audio file, folders etc.

USB device is the active source

Folder

Playlist

Album

Artist

Filename

Track title

Information not available

Operation

Select the USB device as the audio source by repeatedly pressing the **AUX** button until the USB screen appears in the display. After first connecting the USB device, the first track within the first folder will start to play automatically. Subsequently, following audio source switching, the position of playback on the USB device is remembered.

To browse the device contents, press the up/down arrow key or the **OK** button once.

The display will show the track information, together with other important information described below:

- A vertical scroll bar on the right side of the display shows the current position of the folder view.
- ">" after an entry indicates a further level down is readable (for example a folder named after an album, with individual album tracks within that folder).
- "<" before the list indicates that a further level up is readable.
- Icons to the left of track/folder text indicate the type of file/folder. Refer to the list for an explanation of these icons.

To navigate the USB device contents, use the up/down arrow keys to scroll through lists, and the left/right keys to move up or down within the folder hierarchy. Once your desired track, playlist or folder is highlighted, press the **OK** button to select playback.

Note: *If you wish to jump to the top level of the USB device contents, press and hold the left arrow key.*

Audio control

Press the seek up and down keys to skip backwards and forwards through tracks.

Press and hold the seek keys to enable fast rewind/fast forward through track content.

Use the function buttons to enable shuffle, repeat and scan with respect to the whole device, folders and playlists.

Press the **INFO** button or function button 4 to display the following:

- title
- artist
- album
- folder name
- file name.

USING AN IPOD

Various icons are used to identify types of audio file, folders etc.

iPod is the active source

iPod playlist

iPod artist

iPod album

iPod genre

iPod song

iPod generic category

iPod generic media file

Operation

Connect the iPod. See **Connecting an external device** (page 285).

Select the iPod as the audio source by repeatedly pressing the **AUX** button until the iPod screen appears in the display.

The iPod menu list for browsing contents will be available through the radio display. Navigation of the contents follows the same principles as for iPod standalone use (for example search by artist, title, etc.). To browse the iPod contents, press the up/down arrow key or the OK button once.

The display will show the track information, together with other important information described below:

- A vertical scroll bar on the right side of the display shows the current position of the list view.
- ">" after an entry indicates a further level down is readable (for example all albums by a particular artist).
- "<" before the list indicates that a further level up is readable.
- An icon on the left side indicates the type of the currently displayed list (for example list of albums). Refer to the list for an explanation of these icons.

To navigate the iPod contents, use the up/down arrow keys to scroll through lists, and the left/right keys to move up or down within the hierarchy. Once your desired track, playlist, album, artist or genre is highlighted, press the OK button to select playback.

Note: *If you wish to jump to the top level of the iPod contents, press and hold the left arrow key.*

Audio control

Press the seek up and down keys to skip backwards and forwards through tracks.

Press and hold the seek keys to enable fast rewind/fast forward through track content.

Use the function buttons to enable shuffle and repeat with respect to playlists.

Press function button 3 to scan the whole device or a playlist if it is in operation.

Press the **INFO** button or function button 4 to display the following:

- title
- artist
- album.

GENERAL INFORMATION

Press the relevant button on the unit bezel to access the system functions. This will take you into the selected mode.

One hour mode

To conserve battery power, the system can be operated in one hour mode. If the ignition is off, press the ON/OFF button to switch the system on. The system will automatically switch off after one hour.

System notes

WARNINGS

The indicated maximum speed may not be applicable to your vehicle. It is always your responsibility to control the vehicle, supervise any system and obey the correct speed limit.

The front glass on the liquid crystal display may break if hit with a hard object. If the glass breaks, do not touch the liquid crystalline material. In case of contact with the skin, wash immediately with soap and water.

The unit is a highgrade laser product which uses an invisible laser beam. If this is handled incorrectly it can emit dangerous rays. Do not attempt to look through any openings in the unit.

CAUTIONS

Irregular shaped CDs and CDs with a scratch protection film or self adhesive labels attached should not be used. Warranty claims, where this type of disc is found to be inside an audio unit returned for repair, will not be accepted.

Do not clean the unit with solvents or aerosol cleaning agents. Use only a damp cloth.

CAUTIONS

Do not insert foreign objects into any of the unit disc drives or media card slots.

Do not insert more than one disc into the unit disc drive.

Use only 12 cm (4.7 inches) discs or 8 cm (3.1 inches) discs with a suitable adaptor.

Do not attempt to open the unit. If the unit malfunctions consult your dealer.

Improper use of settings and connections, other than those explained in this handbook, can damage the unit.

Do not turn the ignition key or attempt to start the engine while the software is updating.

The system is recommended for use when the ignition key is turned to the accessory position or when the engine is running. If the system is used extensively when the engine is not running, care needs to be taken to avoid draining the battery.

ROAD SAFETY

WARNINGS

The system provides you with information designed to help you reach your destination quickly and safely.

For reasons of safety, the driver should only program the system when the vehicle is stationary.

The system provides no assistance with respect to stop signs, traffic lights, areas under construction or other important safety information.

WARNINGS

Do not use the system until you have familiarised yourself with its operation.

Only view the system display when driving conditions permit.

Safety information

Read and follow all stated safety precautions. Failure to do so may increase your risk of collision and personal injury. Ford Motor Company shall not be liable for any damages of any type arising from failure to follow these guidelines.

If detailed viewing of route instructions is necessary, pull off the road when it is safe to do so and park your vehicle.

Do not use the navigation system to locate emergency services.

To use the system as effectively and safely as possible, always use the latest navigation information. Your dealer will be able to assist with this.

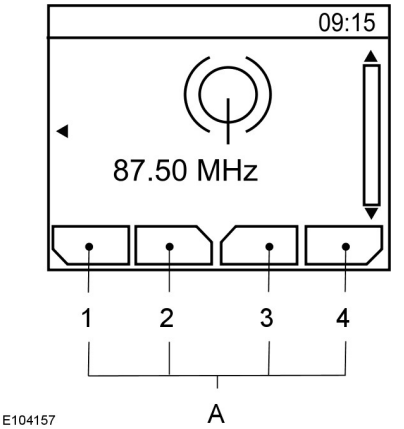

A Descriptions for function buttons 1-4

Function buttons 1 to 4 are context dependent, and change according to the current unit mode. Descriptions for the functions are shown at the bottom of the screen display.

Vehicles with CD-SD navigation system

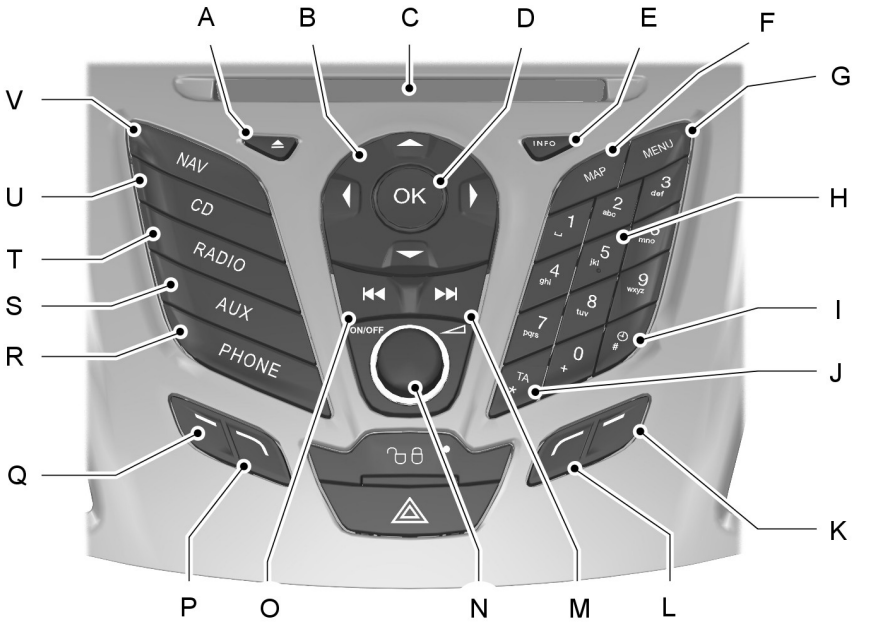

A CD eject.

B Navigation arrows.

C CD aperture.

D OK.

E Information.

F Map select. See **Route displays** (page 303).

G Menu select. See **System settings** (page 299).

H Telephone keypad and station presets. See **Audio unit operation** (page 254). See **Audio unit menus** (page 257). See **Telephone** (page 264).

I Clock. See **System settings** (page 299).

J Traffic announcement. See **Traffic Message Channel** (page 304).

K Function 4.

L Function 3.

M Seek up. CD track selection. See **Station tuning control** (page 254). See **Track selection** (page 259).

N On/off and volume control. See **On/off control** (page 254).

O Seek down. CD track selection. See **Station tuning control** (page 254). See **Track selection** (page 259).

P Function 2.

Q Function 1.

R Phone select. See **Telephone** (page 264).

S Auxiliary select. See **Auxiliary input (AUX IN) socket** (page 262).

T Radio select. See **Audio unit operation** (page 254). See **Audio unit menus** (page 257).

U CD select. See **Compact Disc Player** (page 259).

V Navigation select. See **System settings** (page 299).

Vehicles with Sony CD-SD navigation system

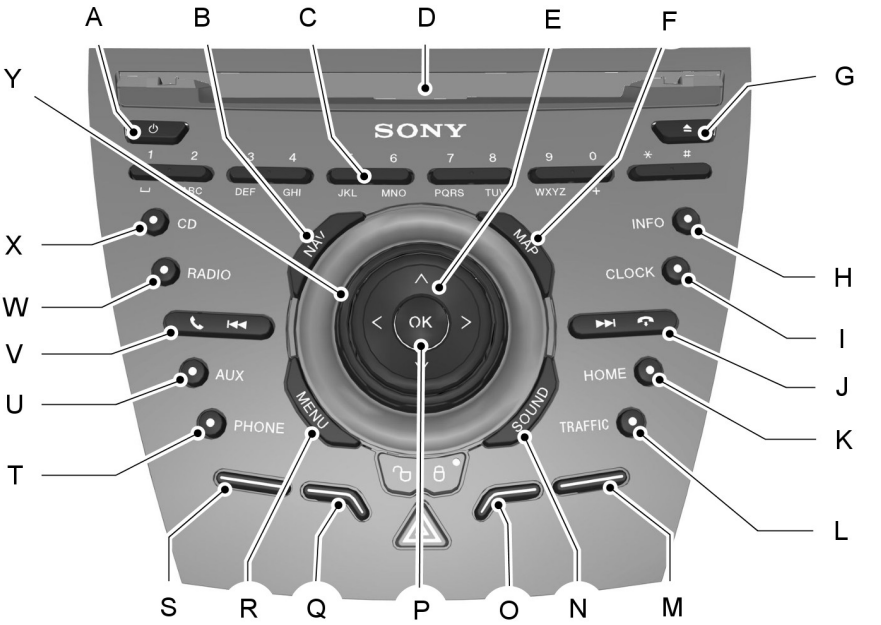

A On/off control. See **On/off control** (page 254).

B Navigation select. See **System settings** (page 299).

C Telephone keypad and station presets. See **Audio unit operation** (page 254). See **Audio unit menus** (page 257). See **Telephone** (page 264).

D CD aperture.

E Navigation arrows.

F Map select. See **Route displays** (page 303).

G CD eject.

H Information.

I Clock. See **System settings** (page 299).

J Seek up. CD track selection. end call. See **Station tuning control** (page 254). See **Track selection** (page 259). See **Using the telephone** (page 265).

K	Home select. See **System settings** (page 299).
L	Traffic announcement. See **Traffic Message Channel** (page 304).
M	Function 4.
N	Sound select. See **Sound button** (page 254).
O	Function 3.
P	OK.
Q	Function 2.
R	Menu select. See **System settings** (page 299).
S	Function 1.
T	Phone select. See **Telephone** (page 264).
U	Auxiliary select. See **Auxiliary input (AUX IN) socket** (page 262).
V	Seek down. CD track selection. accept call. See **Station tuning control** (page 254). See **Track selection** (page 259). See **Using the telephone** (page 265).
W	Radio select. See **Audio unit operation** (page 254). See **Audio unit menus** (page 257).
X	CD select. See **Compact Disc Player** (page 259).
Y	Volume control.

LOADING THE NAVIGATION DATA

Loading the navigation data

E129900

1. Load the navigation SD card into the aperture.
2. Press the NAV button. The road safety warning will be shown in the display.
3. Use the up and down arrow buttons to select the required feature.
4. Press the OK button to confirm your selection.

For map updates and system upgrades please refer to your dealer.

Vehicles with mobile navigation system

CAUTION

Using the system with the engine off will drain the battery.

Note: *You will be charged when sending and receiving text messages.*

Note: *Refer to your phone handbook for all phone functions and operation.*

Note: *Keep the activation code (printed on the installation guide) in a safe place.*

Note: *Retain the activation text message in your mobile phone inbox.*

Compatibility of phones

CAUTION

As no common agreement exists, mobile phone manufacturers are able to implement a variety of profiles in their Bluetooth devices. Because of this, an incompatibility can occur between the phone and hands-free system, which in some cases may significantly degrade the system performance. To avoid this situation, only recommended phones should be used.

Please visit the website www.ford-mobile-connectivity.com for full details.

Installing the micro SD card

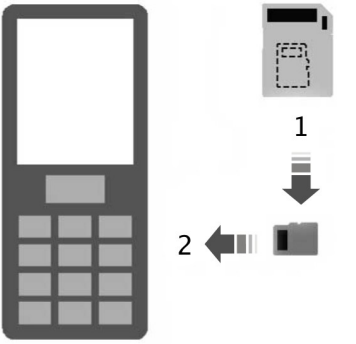

E114212

1. Remove the micro SD card from the adaptor.
2. Insert the micro SD card into the mobile phone.

Activating the mobile phone navigation system

Note: *The radio must be switched on before connecting the mobile phone to the in-car GPS receiver.*

Note: *The Ford Mobile Navigation must be installed and activated on your mobile phone.*

Note: *It is possible to activate up to a* ***maximum*** *of three phones.*

Note: *Detailed instructions are available on the micro SD card and at www.ford-mobile-connectivity.com.*

To connect the device to the system follow the same procedure as for Bluetooth hands free phones. See **Bluetooth setup** (page 264).

1. Switch the radio on.

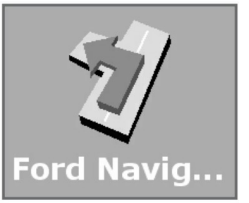

E114213

2. Switch your mobile phone on and start the "Ford Mobile Navigation".
3. Choose "Select Destination".
4. Choose "Enter Address".
5. Change route options if necessary and start the route guidance.
6. The vehicle display will show the turn information. Voice instructions are heard via the vehicle speakers.

Note: *Your mobile phone will display your current position.*

7. You are able to exit the application and continue your route guidance after restarting the application.

Vehicles with CD-SD navigation system or Sony CD-SD navigation system

The system has a large range of features, yet is easy and intuitive to use. Route guidance is shown on the display screen. The screen provides full information for operating the system through the use of menus, text screens and map displays. Screen selections are made by scrolling through the menus using the up, down, left and right arrow buttons and pressing the **OK** button to activate the desired setting.

Basic operation

1. Press either the **NAV** or **MENU** button to enter the menu structure.
2. Use the up, down, left and right arrow buttons and scroll through the various selection lists.
3. Press the **OK** button to activate your selection.

Selection lists

Various screens are presented which offer a selection list of available options.

1. Select the option you require, or if it is not shown on the screen use the up and down arrow buttons to view the remainder of the selection list.
2. Press the **OK** button to confirm your selection.

Alphanumeric keypad entry

When it is necessary to enter an address, a keypad will appear prompting you to enter a postcode, city, or street.

1. Use the up, down, left and right arrow buttons to select the letter or number that you require.

Note: *As you spell the entry the results will appear in the display.*

Note: *The system will limit your entries to only those characters which spell a valid entry.*

2. Press the **OK** button to activate your selection.

Route setting example

Navigation main screen

- To select the navigation system, press the **NAV** button. The road safety caution will be displayed. To use the system, read the caution and press the **OK** button.

Destination input screen

- Use the up and down arrow buttons and scroll to **Destination input**.
- Press the OK button to activate your selection.

Note: *A list with several options is shown.*

- Starting from the top, select the country followed by either the postcode if available or city and street name.
- Use the alphanumeric keypad and selection lists to select your address details.
- Once sufficient information has been entered, scroll to **Start guidance** and press the **OK** button to activate your selection.

Note: *If you only need to navigate to a city centre for example, full address details are not required.*

- The route is now calculated and the screen returns to the main navigation screen with instructions on how to proceed.
- Follow the screen information and voice prompts to reach your destination.

Most of the important settings for your navigation unit can be accessed via the **MENU** or **NAV** button. The following section describes the various options and how to use them.

For menu structures: See **Information Displays** (page 79).

Menu structure - Information and entertainment display - Vehicles with navigation system

Route

This feature allows you to customise the route to your specific journey requirements (for example continue route guidance, block specific sections of your route or select specific sections of a route).

Destination input

This feature allows you to enter your destination details (for example enter city names, enter street names or pick a place from a map).

Traffic

This feature allows you to customise how you receive traffic information (for example review and sort traffic messages, review your route or block parts of your route).

Home address

This feature allows you to start the route guidance to your home address or change the details of your home address.

Note: *On Vehicles with a Sony CD-SD navigation system, press the **HOME** button and the system will automatically start route guidance to the listed home address.*

Last destinations

This feature allows quick access to a history of previous destinations entered in the system. A detailed display will show the complete stored information including an overview map. Select the required repeat destination from the list.

Favourites

This feature allows you to customize a personal destination address book and assign user defined names to addresses and locations. A detailed display will show the complete stored information including an overview map. Select the required repeat destination from the list.

Points of interest

This feature allows you to customise the route to your specific journey requirements (for example select a museum on route or a specific point of interest near your destination).

Tour planning

This feature allows you to enter a number of different destinations and select the order in which you wish to visit them. You can also modify an existing tour or recall a previous tour. The system will automatically calculate and display your chosen journey.

Store position

This feature allows you to store and name your current position.

Route options

This feature allows you to customise the route to your specific journey requirements (for example select the fastest or most economical route or select a route that will avoid tunnels, seasonal roads and toll roads).

Special functions

This feature allows you to select GPS and system information or a demonstration of the system functionality.

Map display

This feature allows you to change the way the map screen is displayed (for example clean 2D and clean 3D view) and to customise display information for your journey (for example time to arrival and lane guidance).

Assistance options

This feature allows you to customise display information for your journey (for example signs, lanes and speed limits).

Personal data

This feature allows you to edit and delete personal data (for example your home address).

Reset all settings

This feature allows you to reset the navigation settings.

Menu structure - Information and entertainment display - All vehicles

Audio settings

Adaptive volume

This feature allows you to adjust the volume level to compensate for engine and road speed noise. You can turn this on and off.

Sound

This feature allows you to adjust the sound settings (for example bass and treble).

Nav audio mixing

This feature allows you to adjust the volume mix between the navigation voice output and audio source.

DSP settings

This feature allows you to customise speaker output relevant to seat positions.

DSP equaliser

This feature allows you to select the music category that most suits your listening preference. The audio output will change to enhance the particular style of music chosen.

News

This feature allows you to receive news bulletins from stations on the FM waveband or radio data system (RDS) and enhanced other network (EON) linked stations, in the same way as traffic information is provided. You can turn this on and off.

Alternative frequencies

This feature will search for and switch to the strongest station signal when moving from one transmission area to another.

RDS regional

This feature controls the behaviour of AF switching between regionally related networks of a parent broadcaster.

DAB service link

This feature allows you to select stations that are broadcast on the DAB channels.

Bluetooth

This feature allows you to switch Bluetooth on or off.

Clock settings

Set time

This feature allows you to manually adjust the time.

Set date

This feature allows you to manually adjust the date, month and year.

GPS time

This feature allows you to, if in a suitable coverage area, automatically adjust the date and time using GPS.

Set time zone

This feature allows you select a specific time zone.

Summertime

This feature allows you set the system to adjust for seasonal time differences.

Note: *GPS time must be selected.*

24-hour mode

This feature allows you to adjust the system between 12 and 24-hour mode.

ROUTE OPTIONS MENU

You can set a number of options which alter the way a route is planned.

Using the up, down, left and right arrow buttons, you can select from the list which road features are to be avoided or included in the route by turning the feature on or off.

Route

Eco

This option will prioritise the most economical route to the destination.

Fast

This option will prioritise the fastest route to the destination.

Short

This option will prioritise the shortest route to the destination..

Always ask

Use this feature to make sure that you are always given the choice of route type selection for your journey.

Driver

Leisurely

This option will prioritise the route for a leisurely driver to the destination.

Normal

This option will prioritise the route for a normal driver to the destination.

Fast

This option will prioritise the route for a fast driver to the destination.

Eco settings

Trailer

Use this feature to change the economy settings of your journey relating to whether or not you are towing a trailer and if so the size of trailer being towed.

Roof box

Use this feature to change the economy settings of your journey relating to the use of a roof box.

Dynamic

When switched on, and if the unit is receiving a valid traffic message channel (TMC) signal, the route will be automatically updated to take into account real time traffic incidents or congestion.

Note: *This feature can be useful in avoiding delays or hold ups on journeys.*

Motorway

When switched on the system will look for motorways on your route and automatically update your route distance and timings.

Note: *This feature can be useful in avoiding delays or hold ups on journeys.*

Ferry/motorail

When switched on the system will look for ferry crossings and motorail facilities on your route and automatically update your route distance and timings.

Toll

When switched on the system will look for toll roads on your route and automatically update your route distance and timings.

Seasonal roads

When switched on the system will look for seasonal roads on your route and automatically update your route distance and timings.

Note: *This feature can be useful in avoiding delays or hold ups on journeys.*

Toll sticker

When switched on the system will automatically select toll roads and update your route distance and timings.

ROUTE DISPLAYS

Map display

Press the **MAP** button for a map view.

This view will show your current location with your vehicle in the centre shown as an arrow surrounded by a circle. The arrow will face in the direction of travel.

The information on the top line gives the name of the current road, or the next road to take if a turn is approaching.

You can change the way the map is displayed by altering the zoom and orientation settings. Press the relevant function buttons to change the map scale and using the left and right arrow buttons zoom in or out. The current map scale is shown on the display.

Map scale settings may be set between 50 metres to 500 kilometres or 0.05 miles to 500 miles, with an auto setting to the far left. The auto setting continuously changes the map scale according to the road type being driven.

Junction zoom

This feature will automatically increase the zoom on the map display at times when you are required to make a turn, or perform more complex manoeuvres. Shortly after the zoom scale will return to the previous level.

Select AUTO to activate junction zoom.

Navigation display

After commencing a navigation route, the default screen is the main navigation screen:

Once an active route is underway, guidance will be given by on-screen information and voice prompts. Whichever audio source you wish to leave the unit in, basic turn by turn and distance information will remain on the screen in the form of a graphic inset. You do not need to leave the unit on the main navigation screen when you are navigating a route. Slightly more detailed information on your route may be available via the main navigation screen if required.

WARNING

Do not rely on the screen prompts when navigating. Always listen to the navigation voice and take care not be distracted from the road ahead.

PRINCIPLE OF OPERATION

Traffic message channel (TMC) stations are broadcast on the FM waveband. TMC is a feature that receives traffic alerts which can be used to plan alternative routes and avoid hold ups.

USING TMC

Press the **TA** or **TRAFFIC** button to show the traffic menu page.

Traffic announcement

Traffic announcement (TA) can be turned on or off via this menu. If switched on a **TA** indicator is shown in the information border of the status bar.

Stations which broadcast on the FM waveband and carry traffic programme (TP) information are identified by **TP** shown in the screen display. With TA switched on the unit will respond to these announcements and interrupt music playback. After the announcement has ended music playback will resume.

Ending traffic announcements

The unit will return to normal operation at the end of each traffic announcement. To end the announcement prematurely, press the **TA**, **TRAFFIC**, **RADIO** or **CD** button during the announcement.

Using TMC messages

Select the required item to display a list of TMC messages. See **General Information** (page 79). This is only an overview display which gives very basic information. Select the message you require further information on and another screen will be displayed giving full message details on incident location etc.

You may either select a view which shows messages only affecting your programmed route, or a view which shows all messages received. Press function button 1 to change the view.

Hazard spot warning (depending on country)

Note: *The availability of this feature will vary from country to country.*

The system supports a hazard spot warning feature which informs you with visible and audible feedback about hazardous traffic areas. The system is off by default. You can switch the system on and off using the information display. See **Information Displays** (page 79).

The road network is constantly changing due to new roads, changes in road classification, etc. Therefore, it is not always possible to exactly match the map data in the system to the current road network.

Map information is regularly updated, but all areas are not necessarily covered to the same level of detail. Some roads, in particular private roads, may not be included on the database. To help with accuracy, always use the latest version navigation disc. Your dealer will be able to provide this.

GENERAL INFORMATION

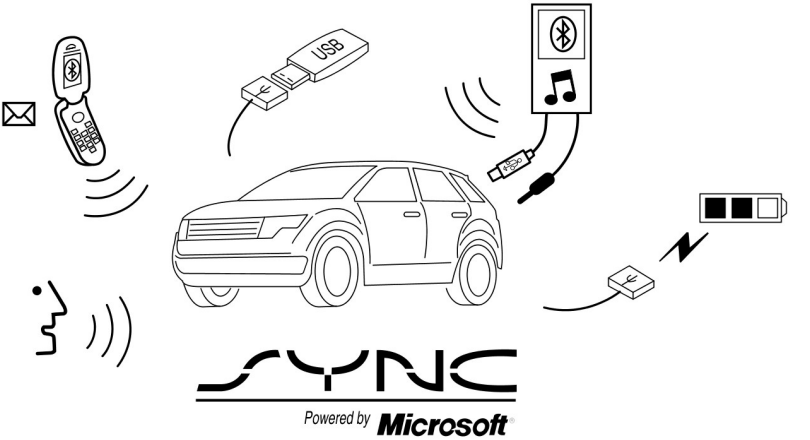

E142598

SYNC is an in-vehicle communications system that works with your Bluetooth-enabled mobile phone and portable media player.

This allows you to:

- make and receive calls
- access and play music from your media player
- use emergency assistance
- access phonebook contacts and music using voice commands
- stream music from your connected mobile phone
- select pre-defined text messages
- use the advanced voice recognition system
- charge your USB device (if your device supports this).

Make sure that you review your device's manual before using it with SYNC.

Support

For further support see an authorised dealer. For more information visit the regional Ford website.

Safety Information

WARNING

Driving while distracted can result in loss of vehicle control, crash and injury. We strongly recommend that you use extreme caution when using any device that may take your focus off the road. Your primary responsibility is the safe operation of your vehicle. We recommend against the use of any handheld device while driving, encourage the use of voice-operated systems when possible and that you become aware of applicable country and local laws that may affect use of electronic devices while driving.

When using SYNC:

- Do not operate playing devices if the power cords or cables are broken, split or damaged. Carefully place cords and cables where they cannot be stepped on or interfere with the operation of pedals, seats, compartments or safe driving abilities.
- Do not leave playing devices in your vehicle during extreme conditions as it could cause them damage. Refer to your device's manual for further information.
- Do not attempt to service or repair the system. See an authorised dealer.

Privacy Information

When a mobile phone is connected to SYNC, the system creates a profile that is linked to that mobile phone. The system creates the profile to offer you more mobile features and to operate more efficiently. Among other things, this profile may contain data about your phonebook, text messages (read and unread) and call history. This will include the history of calls when your mobile phone was not connected to the system. If you connect a media player, the system creates and retains an index of supported media content. The system also records a short development log of approximately 10 minutes of all recent system activity. The log profile and other system data may be used to improve the system and help diagnose any problems that may occur.

The cell phone profile, media player index and development log will remain in the system unless deleted. They are generally accessible in your vehicle only when you connect your cell phone or media player. If you no longer plan to use the system or your vehicle, we recommend you complete a master reset to erase all stored information. See **Information Displays** (page 79).

Special equipment is required to access system data. Access to your vehicle's SYNC module is also required. We will not access the system data for any purpose other than as described without consent. Examples where system data can be accessed are for a court order, where required by law enforcement, other government authorities or other third parties acting with lawful authority. Other parties may seek to access the information independently of us. Further privacy information is available. See **SYNC™ Applications and Services** (page 320).

USING VOICE RECOGNITION

This system helps you control many features using voice commands. This allows you to keep your hands on the steering wheel and focus on what is around you.

Helpful Hints

Make sure the interior of your vehicle is as quiet as possible. Wind noise from open windows and road vibrations may prevent the system from correctly recognising spoken commands.

Before giving a voice command, wait for the system announcement to finish followed by a single beep. Any command spoken prior to this does not register with the system.

Speak naturally, without long pauses between words.

You can interrupt the system at anytime while it is speaking by pressing the voice button. You can also cancel a voice session at any time by pressing and holding the voice button.

Initiating a Voice Session

Press the voice button. A list of available commands will appear in the display.

Say	If You Want To
"Bluetooth Audio"	Stream audio from your mobile phone.
"Cancel"	Cancel the requested action.
"Line in"	Access the device connected to the auxiliary input jack.
"Phone"	Make calls.
"SYNC"	Return to the main menu.
"USB"	Access the device connected to your USB port.
"Voice settings"	Adjust the level of voice interaction and feedback.
"Help"	Hear a list of voice commands available in the current mode.

System Interaction and Feedback

The system provides feedback through audible tones, prompts, questions and spoken confirmations depending on the situation and your chosen level of interaction. You can customise the voice recognition system to provide more or less instruction and feedback.

The default setting is to a higher level of interaction in order to help you learn to use the system. You can change these settings at any time.

Adjusting the Interaction Level

Press the voice button. Say "Voice settings" when prompted, then any of the following:

When You Say	The System
"Interaction Mode Advanced"	Provides less audible interaction and more tone prompts.
"Interaction Mode Standard"	Provides more detailed interaction and guidance.

The system defaults to the standard interaction mode.

Confirmation prompts are short questions the system asks when it is not sure of your request or when there is more than one possible response to your request. For example, the system may ask if the command phone is correct.

Press the voice button to change the confirmation prompt setting. Say "Voice settings" when prompted, then any of the following:

When You Say	The System
"Confirmation Prompts Off"	Makes a best guess from the command. You may still occasionally be asked to confirm settings.
"Confirmation Prompts On"	Clarifies your voice command with a short question.

The system creates suggestion lists when it has the same confidence level of several options based on your voice commands. When turned on, you may be prompted with as many as four possibilities for clarification.

For example, say "one" after the tone to call John Doe at home. Say "two" after the tone to call Johnny Doe on mobile. Say "three" after the tone to call Jane Doe at home.

The same logic applies to media content. For example say, "one" after the tone to play John Doe. Say "two" after the tone to play Johnny Doe. Say "three" after the tone to play Jane Doe.

When You Say	The System
"Media Candidate Lists Off"	Makes a best guess from the media suggestion list. You may still occasionally be asked questions.
"Media Candidate Lists On"	Clarifies your voice command for media suggestions.
"Phone Candidate Lists Off"	Makes a best guess from the mobile phone suggestion list. You may still occasionally be asked questions.
"Phone Candidate Lists On"	Clarifies your voice command for mobile phone suggestions.

Changing the Voice Settings

You can change the voice settings using the information and entertainment display.

1. Press the **MENU** button.
2. Select **SYNC-Settings**.
3. Select **Voice Settings**.

USING SYNC™ WITH YOUR PHONE

Hands-free calling is one of the main features of SYNC. While the system supports a variety of features, many are dependent on your mobile phone's functionality.

At a minimum, most mobile phones with Bluetooth wireless technology support the following functions:

- Answering an incoming call.
- Ending a call.
- Using privacy mode.
- Dialling a number.
- Redialling.
- Call waiting notification.
- Caller ID.

Other features such as text messaging using Bluetooth and automatic phonebook download are mobile phone dependent features. To check your mobile phone's compatibility, refer to your device's manual or visit the regional Ford website.

Pairing a Mobile Phone For the First Time

Note: *You must switch the ignition and radio on.*

Note: *To scroll through the menus, press the up or down arrows on your audio system.*

Wirelessly pairing your mobile phone with the system allows you to make and receive hands-free calls.

1. Make sure the Bluetooth feature on your mobile phone is switched on before starting the search. Refer to your device's manual if necessary.
2. Press the **PHONE** button. When the audio display indicates that no phones are paired, select the option to add.
3. When a message to begin pairing appears in the audio display, search for SYNC on your mobile phone to start the pairing process.
4. When prompted on your mobile phone's display, enter the six-digit PIN provided by the system in the audio display. The display indicates when the pairing is successful.

Depending on your mobile phone's capability and your market, the system may prompt you with questions such as setting the current mobile phone as the primary mobile phone (the mobile phone the system automatically tries to connect with first when you switch the ignition on), downloading your phonebook, etc.

Pairing Subsequent Mobile Phones

Note: *You must switch the ignition and radio on.*

Note: *To scroll through the menus, press the up or down arrows on your audio system.*

1. Make sure the Bluetooth feature on your mobile phone is switched on before starting the search. Refer to your device's manual if necessary.
2. Press the **PHONE** button.
3. Select the option for Bluetooth devices.
4. Press the **OK** button.
5. Select the option to add. This starts the pairing process.
6. When a message to begin pairing appears in the audio display, search for SYNC on your device to start the pairing process.
7. When prompted on your mobile phone's display, enter the six-digit PIN provided by the system in the audio display. The display indicates when the pairing is successful.

The system may prompt you with questions such as setting the current mobile phone as the primary mobile phone, downloading your phonebook, etc.

Mobile Phone Voice Commands

"Phone"	
"Call <name>"[1]	"Go to privacy"
"Call <name> at home"[1]	"Hold"
"Call <name> at work"[1]	"Join"
"Call <name> in office"[1]	"Menu"[2,4]
"Call <name> on cell"[1]	"Phonebook <name>"[2]
"Call <name> on other"[1]	"Phonebook <name> at home"[2]
"Call history incoming"[2]	"Phonebook <name> in office"[2]
"Call history missed"[2]	"Phonebook <name> at work" [2]
"Call history outgoing"[2]	"Phonebook <name> on cell"[2]
"Connections"[2]	"Phonebook <name> on other"[2]
"Dial"[1,3]	-

[1] You do not need to say "phone" prior to these commands.

[2] These commands are not available until your mobile phone information has completely downloaded using Bluetooth.

[3] See **Dial** table.

[4] See **Menu** table.

Phonebook Commands

When you ask the system to access a phonebook name, number, etc., the requested information appears in the audio display. Press the voice button and say "call" to call the contact.

"Dial"
"112" (one-one-two), etc.
"700" (seven hundred)
"800" (eight hundred)
"900" (nine hundred)
"Pound", (#)
"Number <0-9>"
"Asterisk" (*)
"Clear" (deletes all entered digits)
"Delete" (deletes one digit)
"Plus"
"Star"

Note: *To exit dial mode, press and hold the phone button or any button on the audio unit.*

"Menu"
"(Phone) connections"
"(Phone) settings (message) notification off"
"(Phone) settings (message) notification on"
"(Phone) settings (set) phone ringer"
"(Phone) settings (set) ringer 1"
"(Phone) settings (set) ringer 2"
"(Phone) settings (set) ringer 3"
"(Phone) settings (set) ringer off"
"Phone name"
"Text message inbox"

Words in parenthesis are optional and do not have to be spoken for the system to understand the command.

Making a Call

1. Press the voice button and when prompted say "call <name>" or "dial" followed by a number.
2. When the system confirms the number, say "dial" again to initiate the call.

To erase the last spoken digit, say "delete" or press the left arrow button on the audio unit. To erase all spoken digits, say "clear" or press and hold the left arrow button on the audio unit.

To end the call, press the end call button on the steering wheel or select the end call option in the audio display and press **OK**.

Receiving a Call

When receiving a call, you can:

- Answer the call by pressing the accept call button on the steering wheel or by selecting the accept call option in the audio display. Press the **OK** button.
- Reject the call by pressing the reject call button on the steering wheel or by selecting the reject call option in the audio display. Press the **OK** button.
- Ignore the call by doing nothing.

Mobile Phone Options During an Active Call

During an active call, you have extra menu features which become available such as putting a call on hold, joining calls, etc.

To access this menu, choose one of the options available at the bottom of the audio display or select the option for more.

When You Select	You Can
Mic. off	Turn your vehicle's microphone off. To turn the microphone on, select the option again.
Privacy	Switch a call from an active hands-free environment to your mobile phone for a more private conversation. When selected, the audio display will indicate the call is private.
Hold	Put an active call on hold. When selected, the audio display will indicate the call is on hold.
Dial a number	Enter numbers using the audio system numeric keypad, for example numbers for passwords.
Join Calls	Join two separate calls. The system supports a maximum of three callers on a multi-party or conference call. 1. Select the option for more. 2. Access the desired contact through the system or use voice commands to place the second call. Once actively in the second call, select the option for more.

When You Select	You Can
	3. Scroll to the option to join calls and press the **OK** button.
Phonebook	Access your phonebook contacts. 1. Select the option for more. 2. Scroll to the option for phonebook and press the **OK** button. 3. Scroll through your phonebook contacts. 4. Press the **OK** button again when the desired selection appears in the audio display. 5. Press the **OK** button or dial button to call the selection.
Call History	Access your call history log. 1. Select the option for more. 2. Scroll to the option for call history appears and press the **OK** button. 3. Scroll through your call history options (incoming, outgoing or missed). 4. Press the **OK** button again when the desired selection appears in the audio display. 5. Press the **OK** button or dial button to call the selection.

Accessing Features Through the Mobile Phone Menu

You can access your call history, phonebook, sent text messages as well as access mobile phone and system settings. You can also access advanced features such as emergency assistance.

1. Press the **PHONE** button to enter the mobile phone menu.
2. Select one of the options available.

When You Select	You Can
Dial a number	Dial a number using the audio system numeric keypad.
Redial	Redial the last number called (if available). Press the **OK** button to select.
Phonebook[1,2]	Access your downloaded phonebook. 1. Press the **OK** button to confirm and enter. You can use the options at the bottom of the screen to quickly access an alphabetical category. You can also use the letters on the keypad to jump in the list. 2. Scroll through your phonebook contacts. 3. Press the **OK** button again when the desired selection appears in the audio display. 4. Press the **OK** button or dial button to call the selection.

When You Select	You Can
Call History[1]	Access any previously dialled, received or missed calls. 1. Press the **OK** button to select. 2. Scroll to select either incoming calls, outgoing calls or missed calls. Press the **OK** button to make your selection. 3. Press the **OK** button or dial button to call the selection. The system attempts to automatically re-download your phonebook and call history each time your mobile phone connects to the system. You must turn on the auto download feature if your mobile phone supports it.
Speed Dial	Select one of 10 speed dial entries. To set a speed dial entry, go to the phonebook and press and hold one of the numbers on the audio system numeric keypad.
Text message[1]	Send, download and delete text messages.
BT Devices	Access the option for Bluetooth device menu listings (add, connect, set as primary, on or off, delete).
Phone settings [1]	View various settings and features on your mobile phone.
Emergency Assistance	Turn the SYNC emergency assistance feature on or off.

[1] This is a mobile phone dependent feature.

Text Messaging

Note: *This is a mobile phone dependent feature.*

The system allows you to receive, send, download and delete text messages. The system can also read incoming text messages to you so that you do not have to take your eyes off the road.

Receiving a Text Message

Note: *Your mobile phone must support downloading text messages using Bluetooth to receive incoming text messages.*

Note: *Only one recipient is allowed per text message.*

When a new message arrives, an audible tone sounds and the audio display indicates you have a new message.

You have these options:

- Select the listen option to have the system read the message to you.
- Select the view option to open the text message. Select the ignore option or do nothing and the message goes into your text message inbox. Once selected, you have the ability to have the message read out to you, to view other messages or to select the more option.

- Press the voice button and say "Read text message".
- Select the more option and use the arrow buttons to scroll through further options. Choose from the following:
  - **Reply to sender**: Press the **OK** button to access and then scroll through the list of pre-defined messages to send.
  - **Call sender**: Press the **OK** button to call the sender of the message.
  - **Forward msg**: Press the **OK** button to forward the message to anyone in your phonebook or call history. You can also choose to enter a number.

Sending, Downloading and Deleting Your Text Messages

1. Press the **PHONE** button.
2. Select the text messaging option, then press the **OK** button.

A list of all available text messages appears.

You can choose from the following options:

- **New** allows you to send a new text message based on a pre-defined set of 15 messages.
- **View** allows you to read the full message and in addition provides the option to have the message read out to you by the system. To go to the next message select the more option. This allows you to reply to the sender, call the sender or forward the message.
- **Delete** allows you to delete current text messages from the system (not your mobile phone). The audio display indicates when all your text messages have been deleted.
- **More** allows you to delete all messages or to manually trigger a download of all unread messages from your mobile phone.

When you select the option to send a text message, a list of pre-defined messages appear in the audio display.

Sending a Text Message

1. Select the send option when the desired selection is highlighted in the audio display.
2. Select the confirmation option when the contact appears and press the **OK** button again to confirm when the system asks if you would like to send the message. Each text message is sent with a pre-defined signature.

Note: *You can send text messages either by choosing a contact from the phonebook and selecting the text option from the audio display or by replying to a received message in the inbox.*

Accessing Your Mobile Phone Settings

These are mobile phone dependent features. Your mobile phone settings allow you to access and adjust features such as your ringtone, text message notification, modify your phonebook and set up automatic download.

1. Press the **PHONE** button.
2. Scroll until the phone settings option appears, then press the **OK** button.
3. Scroll to select from the following options:

When You Select	You Can
Set as master	If this option is checked, the system will use this mobile phone as the master when there is more than one mobile phone paired to the system. This option can be changed for all paired mobile phones (not only for the active one) using the Bluetooth devices menu.
Phone Status	See the mobile phone name, provider name, mobile phone number, signal level and battery level. When done, press the left arrow button to return to the mobile phone status menu.
Set ringtone	Select which ringtone sounds during an incoming call (one of the system's or your mobile phone's). 1. Press the **OK** button to select and scroll to hear each ringtone. 2. Press the **OK** button to select. If your mobile phone supports in-band ringing, your mobile phone's ringtone sounds when you choose the mobile phone ringtone option.
Text msg notify	Have the option of hearing an audible tone to notify you when a text message arrives. 1. Press the **OK** button to turn the audible tone on or off.
Phonebook pref.	Modify the contents of your phonebook, e.g. add, delete, download. Press the **OK** button to select and scroll between: **Add contacts:** Press the **OK** button to add more contacts from your phonebook. Push the desired contacts on your mobile phone. Refer to your device's manual on how to push contacts. **Delete:** Press the **OK** button to delete the current phonebook and call history. When a message asking you to delete appears, select the option to confirm. The system takes you back to the menu for phone settings. **Download now:** Press the **OK** button to select and download your phonebook to the system. **Auto-download:** Check or uncheck this option to automatically download your phonebook each time your mobile phone connects to the system. Downloading times are mobile phone dependent and quantity dependent. When automatic download is switched on, any changes, additions or deletions saved in the system since your last download are deleted.

When You Select	You Can
	When automatic download is switched off, your phonebook will not be downloaded when your mobile phone connects to the system. Your phonebook, call history and text messages can only be accessed when your paired mobile phone is connected to the system.

Bluetooth Devices

This menu provides access to your Bluetooth devices. Use the arrow buttons to scroll through the menu options. It allows you to add, connect and delete devices and set a mobile phone as primary.

Bluetooth Devices Menu Options

1. Press the **PHONE** button.
2. Scroll until the Bluetooth device option appears, then press the **OK** button.
3. Scroll to select from the following options:

When You Select	You Can
Add	Pair additional mobile phones to the system. 1. Select the option to add to start the pairing process. 2. When a message to begin pairing appears in the audio display, search for **SYNC** on your mobile phone. Refer to your device's manual if necessary. 3. When prompted on your mobile phone's display, enter the six-digit PIN provided by the system in the audio display. The display indicates when the pairing is successful. 4. When the option to set the mobile phone as the primary mobile phone appears, select either yes or no. 5. Depending on the functionality of your mobile phone, you may be asked extra questions (for example. if you would like to download your phonebook). Select either yes or no to confirm your response.
Delete	Delete a paired mobile phone. Select the delete option and confirm when the system asks to delete the selected device. After deleting a mobile phone from the list, the mobile phone can only be connected again by repeating the full pairing process.
Master	Set a previously paired mobile phone as your primary mobile phone. Select the master option to confirm the primary mobile phone.

When You Select	You Can
	The system attempts to connect with the primary mobile phone every time you switch the ignition on. When a mobile phone is selected as primary, it appears first in the list and is marked with an asterisk.
Conn.	Connect a previously paired mobile phone. You can only have one mobile phone connected at a time to use the mobile phone functionality. When another mobile phone is connected, the previous mobile phone will be disconnected from the telephone services. The system allows you to use different Bluetooth devices for the mobile phone functionality and the Bluetooth audio music playback feature at the same time. Select this option to connect to the selected previously paired mobile phone.
Discon.	Disconnects the selected mobile phone. Select this option and confirm when asked to. After disconnecting a mobile phone, it can be connected again without repeating the full pairing process.

System Settings

1. Press the **MENU** button.
2. Select the SYNC settings option, then press the **OK** button.

When You Select	You Can
Bluetooth on	Check or uncheck this option to turn the Bluetooth interface of the system on or off. Select this option then press the **OK** button to change the option's status.
Set defaults	Return to the factory default settings. This selection does not erase your indexed information (phonebook, call history, text messages and paired devices). Select this option and confirm when **Set defaults?** appears in the audio display.
Master reset	Completely erase all information stored on the system (phonebook, call history, text messages and paired devices) and return to the factory default settings. Select this option and confirm when **Master reset?** appears in the audio display. The display indicates when complete and the system takes you back to the **SYNC-Settings** menu.

When You Select	You Can
Install on SYNC	Install applications or software updates you have downloaded. Select this option and confirm when **Install on SYNC** appears in the audio display. There must be a valid SYNC application or update available on the USB thumb drive in order to finish an installation successfully.
System info	Display the system's version numbers as well as its serial number. Press the **OK** button to select.
Voice settings	The voice settings submenu contains various options. See **Using Voice Recognition** (page 307).
Browse USB	Browse the actual menu structure of the connected USB device. Press the **OK** button and use the up or down arrows to scroll through the folders and files. Use the left or right arrows to enter and leave a folder. Media content can be directly selected for playback from this menu.
Emergency assistance	You can turn the emergency assistance feature on or off. See **SYNC™ Applications and Services** (page 320).

SYNC™ APPLICATIONS AND SERVICES

1. Press the **MENU** button to enter the system's menu.
2. Scroll until **SYNC-Apps** is selected, then press **OK**.

A list of available applications will be shown. Each application might have its own specific settings.

SYNC Emergency Assistance

WARNINGS

For this feature to work, your mobile phone must have Bluetooth and be compatible with the system.

WARNINGS

Always place your mobile phone in a secure location inside your vehicle. Failure to do so may cause serious injury to someone or damage the mobile phone which could prevent this feature from working correctly.

Unless the feature setting is switched on prior to a crash, the system will not attempt to place an emergency call which could delay the response time, potentially increasing the risk of serious injury or death. Do not wait for the system to make an emergency call if you can do it yourself. Dial emergency services immediately to avoid a delayed response time. If you do not hear emergency assistance within five seconds of the crash, the system or mobile phone may be damaged or non-functional.

Note: *Before selecting this feature, you must read the emergency assistance privacy notice later in this section for important information.*

Note: *When you turn this feature on or off, that setting will apply for all paired mobile phones. If you have turned this feature off and a previously paired phone connects when you switch the ignition on, either a voice message plays, a display message or icon is shown or both.*

Note: *Every mobile phone operates differently. While this feature works with most mobile phones, some mobile phones may experience difficulties using this feature.*

Note: *Make sure you are familiar with the information regarding airbag deployment. See* ***Occupant protection*** *(page 25).*

In the event of a crash which deploys an airbag or triggers the fuel pump shut off, the system may contact emergency services by dialling 112 (the wireless emergency number that works in most European countries) through a paired and connected mobile phone. For more information about the system and emergency assistance visit the regional Ford website.

Switching Emergency Assistance On and Off

1. Press the **PHONE** button to enter the mobile phone menu.
2. Select the emergency assistance option and press **OK**.
3. Select the option you require and press **OK**.

Display Options

If you turn this feature on, a confirmation message will be shown in the display.

If you turn this feature off, a dialog will be shown in the display which allows you to set a voice reminder.

Off with voice reminder provides a display and voice reminder when your mobile phone connects and your vehicle starts.

Off without voice reminder provides a display reminder only without a voice reminder when your mobile phone connects.

To make sure that emergency assistance works correctly:

- The system must have power and be working correctly at the time of the crash and during feature activation and use.
- The feature must be switched on prior to a crash.
- You must have a mobile phone connected to the system.
- In certain countries it may be necessary to have a valid and registered SIM card with credit in order to place and maintain an emergency call.
- A connected mobile phone must have the ability to make and maintain an outgoing call at the time of the crash.
- A connected mobile phone must have adequate network coverage, battery power and signal strength.
- Your vehicle must have battery power.

Note: *This feature will only work in a European country or region where SYNC emergency assistance can call the local emergency services. Visit the regional Ford website for details.*

In the Event of a Crash

Note: *Not every crash will deploy an airbag or trigger the fuel pump shut off (which may turn on emergency assistance). However, if emergency assistance is triggered the system tries to contact the emergency services. If a connected mobile phone is damaged or loses connection to the system, it searches for and tries to connect to any available previously paired mobile phone. The system will then attempt to dial 112.*

Before making a call:

- If the call has not been cancelled and a successful call is made, an introductory message is played first for the emergency operator. This is followed by hands-free communication between your vehicle's occupants and the operator.
- The system provides a short window of time (approximately 10 seconds) to cancel the call. If the call is not cancelled the system will attempt to dial 112.
- The system plays a message letting you know that it will attempt to make an emergency call. You can cancel the call by selecting the relevant icon in the display or by pressing the hang up button on your mobile phone.

During a call:

- Emergency assistance uses your vehicle GPS or mobile network information when available to determine the most appropriate language to use. It will alert the emergency operator of the crash and deliver the introductory message. This may include your vehicle GPS coordinates.
- The language the system uses to interact with the occupants of your vehicle may differ from the language used to deliver information to the emergency operator.
- After the delivery of the introductory message the voice line will open so that you can speak hands-free with the emergency operator.
- When the line is connected, you must be prepared to provide your name, phone number and location information immediately.

Note: *While information is being provided to the emergency operator, the system will play a message letting you know it is sending important information. It will then let you know when the line is open to start hands-free communication.*

Note: *During an emergency assistance call, an emergency priority screen will be displayed which contains vehicle GPS coordinates when available. These coordinates match the information provided to the emergency operator in the introductory message.*

Note: *The emergency operator may also receive information from the mobile network such as mobile phone number, mobile phone location and mobile phone carrier name independent from SYNC emergency assistance.*

Emergency assistance may not work if:

- Your mobile phone or emergency assistance hardware has been damaged in the crash.
- The vehicle battery or the system has no power.
- Your mobile phone is thrown from your vehicle during a crash.
- You do not have a valid and registered SIM card with credit in your mobile phone.
- You are in a European country or region where the SYNC emergency assistance call cannot be placed. Visit the regional Ford website for details.

Important Information About the Emergency Assistance Feature

Emergency assistance does not currently call emergency services in the following markets: Albania, Belarus, Bosnia and Herzegovina, Macedonia, Netherlands, Ukraine, Moldova and Russia.

Visit the regional Ford website for latest details.

Emergency Assistance Privacy Notice

When you turn emergency assistance on, it may disclose to emergency services that your vehicle has been in a crash involving the deployment of an airbag or activation of the fuel pump shut off. This feature has the capability to disclose your location information to the emergency operator or other details about your vehicle or crash to provide the most appropriate emergency services.

If you do not want to disclose this information, do not turn the feature on.

USING SYNC™ WITH YOUR MEDIA PLAYER

You can access and play music from your media player through your vehicle's speaker system using the system's media menu or voice commands. You can also sort and play your music by specific categories such as artists, albums, etc.

SYNC is capable of hosting nearly any media player including: iPod®, Zune™, Plays from device players, and most USB drives. SYNC also supports audio formats such as MP3, WMA, WAV and ACC.

Connecting Your Media Player to the USB Port

Note: *If your media player has a power switch, make sure that the device is turned on.*

To Connect Using Voice Commands

1. Plug the device into your vehicle's USB port.
2. Press the voice button and when prompted, say "USB".
3. You can now play music by saying any of the appropriate voice commands. Refer to the media voice commands.

To Connect Using the System Menu

1. Plug the device into your vehicle's USB port.
2. Press the **AUX** button until an initialising message appears in the display.
3. Depending on how many media files are on your connected device, an indexing message may appear in the display. When indexing is complete, the screen returns to the **Play** menu.

Press **Browse**. Now you can scroll through the list:

- **Play all.**
- **Playlists.**
- **Songs.**
- **Artists.**
- **Albums.**
- **Genres.**
- **Browse USB.**
- **Reset USB.**
- **Exit.**

What is Playing?

At any time during playback, you can press the voice button and ask the system what is playing. The system reads the metadata tags (if populated) of the track being played.

Media Voice Commands

Press the voice button and when prompted say "USB", and then any of the following:

"USB"	
"Pause"	
"Play"	"Repeat off"
"Play album <name>"[1,2]	"Repeat on"
"Play All"	"Search album <name>"[1,2]
"Play artist <name>"[1,2]	"Search artist <name>"[1,2]
"Play genre <name>"[1,2]	"Search genre <name>"[1]
"Play next folder"[3]	"Search song <name>"[1]
"Play next track"	"Search track <name>"[1,2]
"Play playlist <name>"[1,2]	"Shuffle off"
"Play previous folder"[3]	"Shuffle on"
"Play previous track"	"Similar music"
"Play song <name>"[1]	"What's playing?"
"Play track <name>"[1,2]	

[1] <name> is a dynamic listing, meaning that it could be the name of any desired group, artist, song, etc.

[2] Voice commands which are not available until indexing is complete.

[3] Voice commands which are only available in folder mode.

Voice Command Guide	
"Search genre" or "Play genre"	The system searches all the data from your indexed music and if available, begins to play the chosen type of music. You can only play genres of music which are present in the genre metadata tags that you have on your media player.
"Similar music"	The system compiles a playlist and then plays similar music to what is currently playing from the USB port using indexed metadata information.
Search or Play, "Artist", "Track, or "Album"	The system searches for a specific artist, track or album from the music indexed through the USB port.

The system is also capable of playing music from your mobile phone via Bluetooth.

To switch the Bluetooth audio on use the **AUX** or **Source** button or press the voice button and when prompted say "Bluetooth audio", then any of the following:

"Bluetooth Audio"
"Connections"
"Pause"
"Play"
"Play next track"
"Play previous track"

Media Menu Features

The media menu allows you to select how to play your music (by artist, genre, shuffle, repeat, etc.) and to find similar music or reset the index of your USB devices.

1. Press **AUX** to select USB playback and then **Options** to enter the **Media** menu.
2. Scroll to cycle through:

When You Select	You Can
Shuffle playlist and Repeat track	Choose to shuffle or repeat your music. Once these selections are turned on, they will remain on until turned off.
Similar music	You can play similar types of music to the current playlist from the USB port. The system uses the metadata information of each track to compile a playlist. The system then creates a new list of similar tracks and will then begin playing. Each track must have the metadata tags populated for this feature. With certain playing devices, if your metadata tags are not populated, the tracks will not be available in voice recognition, play menu or similar music. However, if you place these tracks onto your playing device in mass storage device mode they are available in voice recognition, Play menu browsing and Similar Music. Unknowns are placed into any unpopulated metadata tag.
Reset SYNC USB	Resets the USB index. After the new indexing is complete you can choose what to play from the USB song library.

Accessing Your USB Song Library

This menu allows you to select and play your media files by artist, album, genre, playlist, track or even to browse what is on your USB device.

1. Make sure that your device is plugged into your vehicle's USB port and is turned on.
2. Press **AUX** to select USB playback and then **Browse**.

If there are no media files to access, the display indicates there is no media. If there are media files, you have the following options to scroll through and select from:

When You Select	You Can
Play all	Play all indexed media files from your playing device one at a time in numerical order. * Press **OK** to select. The first track title appears in the display.
Playlists	Access your playlists (from formats such as . ASX, .M3U, . WPL or . MTP). * 1. Press **OK** to select.

When You Select	You Can
	2. Scroll to select the desired playlist, then press **OK**.
Songs	Search for and play a specific track which has been indexed. * 1. Press **OK** to select. 2. Scroll to select the desired track, then press **OK**.
Artists	Sort all indexed media files by artist. Once selected, the system lists and then plays all artists and tracks alphabetically. * 1. Press **OK** to select. 2. Scroll to select the desired artist, then press **OK**.
Albums	Sort all indexed media files by albums. * 1. Press **OK** to select. 2. Scroll to select the desired albums, then press **OK**.
Genres	Sort indexed music by genre (category) type. * 1. Press **OK** to select. 2. Scroll to select the desired genre, then press **OK**.
Browse USB	Browse all supported media files on your media player connected to the USB port. You can only view media files which are compatible with SYNC, other files saved are not visible. 1. Press **OK** to select. 2. Scroll to browse indexed media files on your flash drive, then press **OK**.
Reset USB	Resets the USB index. After the new indexing is complete you can choose what to play from the USB song library.

*You can use the buttons at the bottom of the audio display to quickly jump to a certain alphabetical category. You can also use the letters on the numeric keypad to jump in the list.

Bluetooth Devices and System Settings

You can access these menus using the audio display. See **Using SYNC™ With Your Phone** (page 310).

SYNC™ TROUBLESHOOTING

Your SYNC system is easy to use. However, should questions arise, please refer to the tables below.

To check your mobile phone's compatibility, visit the regional Ford website.

Mobile Phone Issues		
Issue	**Possible Cause**	**Possible Solution**
A lot of background noise during a phone call.	The audio control settings on your mobile phone may be affecting SYNC performance.	Refer to your device's manual regarding audio adjustments.
During a call, I can hear the other person but they cannot hear me.	Possible mobile phone malfunction.	Try turning your mobile phone off, resetting it or removing the battery, then trying again. Make sure that the microphone for SYNC is not set to off.
SYNC is not able to download my phonebook.	This is a mobile phone-dependent feature. Possible mobile phone malfunction.	Check your mobile phone's compatibility. Try turning your mobile phone off, resetting it or removing the battery, then trying again. Try pushing your phonebook contacts to SYNC by selecting the option to add. You must switch your mobile phone on and the automatic phonebook download feature on SYNC.
The system says "Phonebook downloaded" but my phonebook in SYNC is empty or is missing contacts.	Limitations on your mobile phone's capability.	Try pushing your phonebook contacts to SYNC by selecting the option to add. If the missing contacts are stored on your SIM card, try moving them to your mobile phone's memory. Remove any pictures or special ring tones associated with the missing contact. You must switch your mobile phone on and the automatic phonebook download feature on SYNC.
I am having trouble connecting my mobile phone to SYNC.	This is a mobile phone-dependent feature. Possible mobile phone malfunction.	Check your mobile phone's compatibility. Try turning your mobile phone off, resetting it or removing the battery, then trying again. Try deleting your device from SYNC and deleting SYNC from your device, then trying again. Always check the security and auto accept prompt settings relative to the SYNC Bluetooth connection on your mobile phone. Update your mobile phone's firmware.

Mobile Phone Issues		
Issue	**Possible Cause**	**Possible Solution**
		Turn off the auto download setting.
Text messaging is not working on SYNC.	This is a mobile phone-dependent feature. Possible mobile phone malfunction.	Check your mobile phone's compatibility. Try turning your mobile phone off, resetting it or removing the battery, then trying again.
Audible text messages do not work on my mobile phone.	This is a mobile phone limitation. This is a mobile phone-dependent feature.	Your mobile phone must support downloading text messages through Bluetooth to receive incoming text messages. Access the text messaging menu of SYNC to see if the feature is supported by your mobile phone. Press the **PHONE** button and then scroll and select the option for text messaging, then press **OK**. Because each mobile phone is different refer to your device's manual for the specific mobile phone being paired. In fact, there can be differences between mobile phones due to brand, model, service provider and software version.

USB and Media Issues		
Issue	**Possible Cause**	**Possible Solution**
I am having trouble connecting my device.	Possible device malfunction.	Try turning the device off, resetting it or removing the battery, then trying again. Make sure you are using the manufacturer's cable. Make sure the USB cable is correctly inserted into the device and your vehicle's USB port.

USB and Media Issues		
Issue	**Possible Cause**	**Possible Solution**
		Make sure that the device does not have an auto-install program or active security settings.
SYNC does not recognise my device when I start my vehicle.	This is a device limitation.	Make sure you are not leaving the device in your vehicle during very hot or cold temperatures.
Bluetooth audio does not stream.	This is a device-dependent feature. The device is not connected.	Make sure the device is connected to SYNC and that you have pressed play on your device.
SYNC does not recognise music that is on my device.	Your music files may not contain the correct artist, song title, album or genre information. The file may be corrupted. The song may have copyright protection which does not allow it to play.	Make sure that all song details are populated. Some devices require you to change the USB settings from mass storage to media transfer protocol class.
When my iPhone or iPod Touch is connected through the USB and Bluetooth Audio at the same time, I sometimes do not hear any sound.	This is a device limitation.	From the iPhone or iPod Touch music now playing screen, select the audio device airplay icon at the very bottom of your iPhone or iPod Touch screen. To listen to the iPhone or iPod Touch through Bluetooth Audio, select SYNC. To listen to the iPhone or iPod Touch through USB, select Dock Connector.

Voice Command Issues		
Issue	**Possible Cause**	**Possible Solution**
SYNC does not understand what I am saying.	You may be using the wrong voice commands. You may be speaking too soon or at the wrong time.	Review the mobile phone voice commands and the media voice commands at the beginning of their respective sections. Refer to the audio display during an active voice session, you will find a list of voice commands there. The microphone for the system is either in your rear view mirror or in the headliner just above the windscreen.
SYNC does not understand the name of a song or artist.	You may be using the wrong voice commands. You may not be saying the name exactly as it is saved. The system may not be reading the name the same way you are saying it.	Review the media voice commands at the beginning of the media section. Say the song or artist exactly as it is saved. If you say "Play Artist Prince" the system does not play music by Prince and the Revolution or Prince and the New Power Generation. Make sure you are saying the complete title such as "California remix featuring Jennifer Nettles". If the songs are saved in capital letters, you have to spell them. LOLA requires you to say "L-O-L-A". Do not use special characters in the title as the system does not recognise them.
SYNC does not understand or is calling the wrong contact when I want to make a call.	You may be using the wrong voice commands. You may not be saying the name exactly as it is saved. Contacts in your phonebook may be very short and similar or they may contain special characters. Your phonebook contacts may be saved in capital letters.	Review the mobile phone voice commands at the beginning of the mobile phone section. Make sure you are saying the name exactly as it is saved. For example, if a contact is saved as Joe Wilson, say "Call Joe Wilson". The system works better if you list full names such as "Joe Wilson" rather than "Joe". Do not use special characters such as 123 or ICE as the system does not recognise them. If the contacts are saved in capital letters, you have to spell them. JAKE requires you to say "Call J-A-K-E".

Voice Command Issues		
Issue	**Possible Cause**	**Possible Solution**
		You can also use the mobile phone and media suggestion lists to get a list of possible suggestions when the system cannot fully understand you. See **Using Voice Recognition** (page 307).
The SYNC voice control system is having trouble recognising foreign names stored on my mobile phone.	Foreign names are spoken using the currently selected language for SYNC.	SYNC applies the phonetic pronunciation rules of the selected language to the contact names stored on your mobile phone. Helpful Hint: You can select your contact manually. Press **PHONE** select the option for phonebook and then contact name. Press the soft-key option to hear it. SYNC will read the contact name to you, giving you some idea of the pronunciation it is expecting.
The SYNC voice control system is having trouble recognizing foreign tracks, artists, albums, genres and playlist names from my media player or USB flash drive.	Foreign names are spoken using the currently selected language for SYNC.	SYNC applies the phonetic pronunciation rules of the selected language to the names stored on your media player or USB flash drive. It is able to make some exceptions for very popular artist names (for example, U2) such that you can always use the English pronunciation for these artists.
Voice prompts are electronically generated and the pronunciation of some words may not be accurate for my language.	SYNC uses text-to-speech voice prompt technology.	SYNC uses a synthetically-generated voice rather than pre-recorded human voice.

Voice Command Issues		
Issue	**Possible Cause**	**Possible Solution**
		SYNC offers several new voice control features for a wide range of languages. Dialling a contact name directly from the phonebook without pre-recording (for example, “call John Smith”) or selecting a track, artist, album, genre or playlist directly from your media player (for example," play artist Madonna).
My previous bluetooth voice control system allowed me to control the radio, CD, and climate control systems. Why can I not control these systems with SYNC?	The focus of SYNC is to control your mobile devices and the content stored on them.	SYNC offers significant capability above and beyond the previous system such as. Dialling a contact name directly from the phonebook without pre-recording (for example, “call John Smith”) or selecting a track, artist, album, genre or playlist directly from your media player (for example, " play artist Madonna).

General		
Issue	**Possible Cause**	**Possible Solution**
The language selected for the instrument cluster and information and entertainment display (radio, CD, menu settings, etc.) does not match the SYNC language (phone, USB, Bluetooth audio, voice control and voice prompts).	A language not supported by SYNC is currently selected for the instrument cluster and information and entertainment display.	SYNC only supports four languages in a single module for text display, voice control and voice prompts. The four languages in each bundle are selected based upon the most popular languages spoken in the country where your vehicle is sold. If the selected language is not available, SYNC will remain in the current active language. SYNC offers several new voice control features for a wide range of languages. Dialling a contact name directly from the phonebook without pre-recording (for example, “call John Smith”) or selecting a track, artist, album, genre or playlist directly from your media player (for example, play artist Madonna).

TYPE APPROVALS

FCC/INDUSTRY CANADA NOTICE

This device complies with Part 15 of the FCC Rules. Operation is subject to the following two conditions: (1) this device may not cause harmful interference, and (2) this device must accept any interference received, including interference that may cause undesired operation.

FCC ID: WJLRX-42

IC: 7847A-RX42

Changes or modifications to your device not expressly approved by the party responsible for compliance can void the user's authority to operate the equipment.

RX-42 - declaration of conformity

We, the party responsible for compliance, declare under our sole responsibility that the Handset Integration product RX-42 is in conformity with the provisions of the following Council Directive: 1999/5/EC. A copy of the Declaration of Conformity can be found at:

www.novero.com/declaration_of_conformity

The Bluetooth word mark and logos are owned by the Bluetooth SIG, Inc. and any use of such marks by Ford Motor Company is under license. Other trademarks and trade names are those of their respective owners.

TYPE APPROVALS

iPod is a trademark of Apple Inc.

TYPE APPROVALS

© 2008 NAVTEQ B.V. All rights reserved.

AT	“© Bundesamt für Eich- und Vermessungswesen”
PL	“© EuroGeographics”
FR	“source: Géoroute® IGN France & BD Carto® IGN France”
DE	“Die Grundlagendaten wurden mit Genehmigung der zuständigen Behörden entnommen”
GB	“Based upon Crown Copyright material.”
GR	“Copyright Geomatics Ltd.”
IT	“La Banca Dati Italiana è stata prodotta usando quale riferimento anche cartografia numerica ed al tratto prodotta e fornita dalla Regione Toscana.”
NO	“Copyright © 2000; Norwegian Mapping Authority”
PT	“Source: IgeoE – Portugal”
ES	“Información geográfica propiedad del CNIG”
SE	“Based upon electronic data © National Land Survey Sweden.”
CH	“Topografische Grundlage: © Bundesamt für Landestopographie“

TYPE APPROVALS

SD Logo is a trademark.

TYPE APPROVALS

Laser sensor

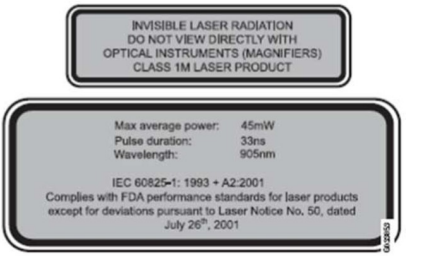

WARNINGS

Invisible laser radiation. Do not view directly with optical instruments (magnifiers). Class 1M laser product.

WARNINGS

IEC 60825-1: 1993 + A2:2001. Complies with FDA performance standards for laser products except for deviation pursuant to Laser Notice No. 50, dated July 26th, 2001.

Item	Specification
Max average power	45mW
Pulse duration	33ns
Wavelength	905nm

TYPE APPROVALS

EU Declaration

Hereby, Valeo declares that this short range device is in compliance with the essential requirements and other relevant provisions of Directive 1999/5/EC.

Certificate for United Arab Emirates

E125209 ER-GEN-00-0002-24

TYPE APPROVALS

The navigation software is based in part on the work of the FreeType team © 2006

TYPE APPROVALS

The navigation software is based in part on the work of the independent JPEG Group.

ELECTROMAGNETIC COMPATIBILITY

WARNINGS

Your vehicle has been tested and certified to legislations relating to electromagnetic compatibility (72/245/EEC, UN ECE Regulation 10 or other applicable local requirements). It is your responsibility to ensure that any equipment you have fitted complies with applicable local legislations. Have any equipment fitted by properly trained technicians.

The RF (radio frequency) transmitter equipment (e.g. cellular telephones, amateur radio transmitters etc.) may only be fitted to your vehicle if they comply with the parameters shown in the table below. There are no special provisions or conditions for installations or use.

WARNINGS

Do not mount any transceiver, microphones, speakers, or any other item in the deployment path of the airbag system.

WARNINGS

Do not fasten antenna cables to original vehicle wiring, fuel pipes and brake pipes.

Keep antenna and power cables at least 10 centimetres (4 inches) from any electronic modules and airbags.

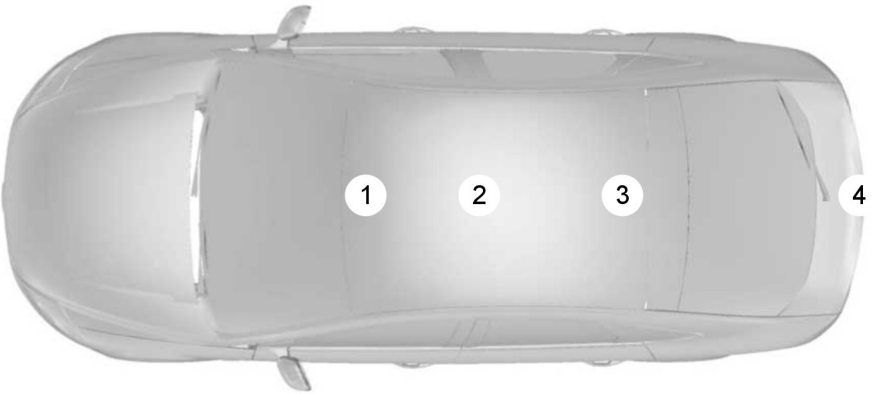

E85998

Frequency Band MHz	Maximum output power Watt (Peak RMS)	Antenna Positions
1 – 30	50 W	3, 4
30 – 54	50 W	1, 2, 3
68 – 87.5	50 W	1, 2, 3
142 – 176	50 W	1, 2, 3
380 – 512	50 W	1, 2, 3
806 – 940	10 W	1, 2, 3
1200 – 1400	10 W	1, 2, 3
1710 – 1885	10 W	1, 2, 3
1885 – 2025	10 W	1, 2, 3

Note: *After the installation of RF transmitters, check for disturbances from and to all electrical equipment in the vehicle, both in the standby and transmit modes.*

Check all electrical equipment:

- with the ignition **ON**
- with the engine running
- during a road test at various speeds.

Check that electromagnetic fields generated inside the vehicle cabin by the transmitter installed do not exceed applicable human exposure requirements.

END USER LICENCE AGREEMENT

SYNC® End User Licence Agreement (EULA)

- You have acquired a device ("DEVICE") that includes software licenced by Ford Motor Company and its affiliates ("FORD MOTOR COMPANY") from an affiliate of Microsoft Corporation ("MS") . Those installed software products of MS origin, as well as associated media, printed materials, and "online" or electronic documentation ("MS SOFTWARE") are protected by international intellectual property laws and treaties. The MS SOFTWARE is licenced, not sold. All rights reserved.
- The MS SOFTWARE may interface with and/or communicate with, or may be later upgraded to interface with and/or communicate with additional software and/or systems provided by FORD MOTOR COMPANY. The additional software and systems of FORD MOTOR COMPANY origin, as well as associated media, printed materials, and "online" or electronic documentation ("FORD SOFTWARE") are protected by international intellectual property laws and treaties. The FORD SOFTWARE is licenced, not sold. All rights reserved.
- The MS SOFTWARE and/or FORD SOFTWARE may interface with and/or communicate with, or may be later upgraded to interface with and/or communicate with additional software and/or systems provided by third party software and service suppliers. The additional software and services of third party origin, as well as associated media, printed materials, and "online" or electronic documentation ("THIRD PARTY SOFTWARE") are protected by international intellectual property laws and treaties. The THIRD PARTY SOFTWARE is licenced, not sold. All rights reserved.
- The MS SOFTWARE, FORD SOFTWARE and THIRD PARTY SOFTWARE hereinafter collectively and individually will be referred to as "SOFTWARE".

IF YOU DO NOT AGREE TO THIS END USER LICENCE AGREEMENT ("EULA") DO NOT USE THE DEVICE OR COPY THE SOFTWARE. ANY USE OF THE SOFTWARE, INCLUDING BUT NOT LIMITED TO USE ON THE DEVICE, WILL CONSTITUTE YOUR AGREEMENT TO THIS EULA (OR RATIFICATION OF ANY PREVIOUS CONSENT).

GRANT OF SOFTWARE LICENCE: This EULA grants you the following licence:

- You may use the SOFTWARE as installed on the DEVICE and as otherwise interfacing with systems and/or services provide by or through FORD MOTOR COMPANY or its third party software and service providers.

Description of Other Rights and Limitations

- **Speech Recognition:** If the SOFTWARE includes speech recognition component(s), you should understand that speech recognition is an inherently statistical process and that recognition errors are inherent in the process. Neither FORD MOTOR COMPANY nor its suppliers shall be liable for any damages arising out of errors in the speech recognition process.
- **Limitations on Reverse Engineering, Decompilation and Disassembly:** You may not reverse engineer, decompile, or disassemble nor permit others to reverse engineer, decompile or disassemble the SOFTWARE, except and only to the extent that such activity is expressly permitted by applicable law notwithstanding this limitation.
- **Limitations on Distributing, Copying, Modifying and Creating Derivative Works:** You may not distribute, copy, make modifications to or create derivative works based on the SOFTWARE, except and only to the extent that such activity is expressly permitted by applicable law notwithstanding this limitation.
- **Single EULA:** The end user documentation for the DEVICE and related systems and services may contain multiple EULAs, such as multiple translations and/or multiple media versions (e.g., in the user documentation and in the software). Even if you receive multiple EULAs, you are licenced to use only one (1) copy of the SOFTWARE.
- **SOFTWARE Transfer:** You may permanently transfer your rights under this EULA only as part of a sale or transfer of the DEVICE, provided you retain no copies, you transfer all of the SOFTWARE (including all component parts, the media and printed materials, any upgrades, and, if applicable, the Certificate(s) of Authenticity), and the recipient agrees to the terms of this EULA. If the SOFTWARE is an upgrade, any transfer must include all prior versions of the SOFTWARE.
- **Termination:** Without prejudice to any other rights, FORD MOTOR COMPANY or MS may terminate this EULA if you fail to comply with the terms and conditions of this EULA.
- **Security Updates/Digital Rights Management:** Content owners use the WMDRM technology included in your DEVICE to protect their intellectual property, included copyrighted content. Portions of the SOFTWARE on your DEVICE use WMDRM software to access WMDRM-protected content. If the WMDRM software fails to protect the

content, content owners may ask Microsoft to revoke the SOFTWARE's ability to use WMDRM to play or copy protected content. This action does not affect unprotected content. When your DEVICE downloads licences for protected content, you agree that Microsoft may include a revocation list with the licences. Content owners may require you to upgrade the SOFTWARE on your DEVICE to access their content. If you decline an upgrade, you will not be able to access content that requires the upgrade.

- **Consent to Use of Data:** You agree that MS, Microsoft Corporation, FORD MOTOR COMPANY, third party software and systems suppliers, their affiliates and/or their designated agent may collect and use technical information gathered in any manner as part of product support services related to the SOFTWARE or related services. MS, Microsoft Corporation, FORD MOTOR COMPANY, third party software and services suppliers, their affiliates and/or their designated agent may use this information solely to improve their products or to provide customized services or technologies to you. MS, Microsoft Corporation, FORD MOTOR COMPANY, third party software and systems suppliers, their affiliates and/or their designated agent may disclose this information to others, but not in a form that personally identifies you.
- **Internet-Based Services Components:** The SOFTWARE may contain components that enable and facilitate the use of certain Internet-based services. You acknowledge and agree that MS, Microsoft Corporation, FORD MOTOR COMPANY, third party software and service suppliers, their affiliates and/or their designated agent may automatically check the version of the SOFTWARE and/or its components that you are utilizing and may provide upgrades or supplements to the SOFTWARE that may be automatically downloaded to your DEVICE.
- **Additional Software/Services:** The SOFTWARE may permit FORD MOTOR COMPANY, third party software and service suppliers, MS, Microsoft Corporation, their affiliates and/or their designated agent to provide or make available to you SOFTWARE updates, supplements, add-on components, or Internet-based services components of the SOFTWARE after the date you obtain your initial copy of the SOFTWARE ("Supplemental Components").

If FORD MOTOR COMPANY or third party software and services suppliers provide or make available to you Supplemental Components and no other EULA terms are provided along with the Supplemental Components, then the terms of this EULA shall apply.

If MS, Microsoft Corporation, their affiliates and/or their designated agent make available Supplemental Components, and no other EULA terms are provided, then the terms of this EULA shall apply, except that the MS, Microsoft Corporation or affiliate entity providing the Supplemental Component(s) shall be the licensor of the Supplemental Component(s).

FORD MOTOR COMPANY, MS, Microsoft Corporation, their affiliates and/or their designated agent reserve the right to discontinue without liability any Internet-based services provided to you or made available to you through the use of the SOFTWARE.

- **Links to Third Party Sites:** The MS SOFTWARE may provide you with the ability to link to third party sites through the use of the SOFTWARE. The third party sites are not under the control of MS, Microsoft Corporation, their affiliates and/or their designated agent. Neither MS nor Microsoft Corporation nor their affiliates nor their designated agent are responsible for (i) the contents of any third party sites, any links contained in third party sites, or any changes or updates to third party sites, or (ii) webcasting or any other form of transmission received from any third party sites. If the SOFTWARE provides links to third party sites, those links are provided to you only as a convenience, and the inclusion of any link does not imply an endorsement of the third party site by MS, Microsoft Corporation, their affiliates and/or their designated agent.
- **Obligation to Drive Responsibly:** You recognise your obligation to drive responsibly and keep attention on the road. You will read and abide with the DEVICE operating instructions particularly as they pertain to safety and assumes any risk associated with the use of the DEVICE.

UPGRADES AND RECOVERY MEDIA: If the SOFTWARE is provided by FORD MOTOR COMPANY separate from the DEVICE on media such as a ROM chip, CD ROM disk(s) or via web download or other means, and is labelled "For Upgrade Purposes Only" or "For Recovery Purposes Only" you may install one (1) copy of such SOFTWARE onto the DEVICE as a replacement copy for the existing SOFTWARE, and use it in accordance with this EULA, including any additional EULA terms accompanying the upgrade SOFTWARE.

INTELLECTUAL PROPERTY RIGHTS: All title and intellectual property rights in and to the SOFTWARE (including but not limited to any images, photographs, animations, video, audio, music, text and "applets" incorporated into the SOFTWARE), the accompanying printed materials, and any copies of the SOFTWARE, are owned by MS, Microsoft Corporation, FORD MOTOR COMPANY, or their affiliates or suppliers. The SOFTWARE is licenced, not sold. You may not copy the printed materials accompanying the SOFTWARE. All title and intellectual property rights in and to the content which may be accessed through use of the SOFTWARE is the property of the respective content owner and may be protected by applicable copyright or other intellectual property laws and treaties. This EULA grants you no rights to use such content. All rights not specifically granted under this EULA are reserved by MS, Microsoft Corporation, FORD MOTOR COMPANY, third party software and service providers, their affiliates and suppliers. Use of any on-line services which may be accessed through the SOFTWARE may be governed by the respective terms of use relating to such services. If this SOFTWARE contains documentation that is provided only in electronic form, you may print one copy of such electronic documentation.

EXPORT RESTRICTIONS: You acknowledge that the SOFTWARE is subject to U.S. and European Union export jurisdiction. You agree to comply with all applicable international and national laws that apply to the SOFTWARE, including

the U.S. Export Administration Regulations, as well as end-user, end-use and destination restrictions issued by U.S. and other governments. For additional information, see http://www.microsoft.com/exporting/.

TRADEMARKS: This EULA does not grant you any rights in connection with any trademarks or service marks of FORD MOTOR COMPANY, MS, Microsoft Corporation, third party software or service providers, their affiliates or suppliers.

PRODUCT SUPPORT: Product support for the SOFTWARE is not provided by MS, its parent corporation Microsoft Corporation, or their affiliates or subsidiaries. For product support, please refer to FORD MOTOR COMPANY instructions provided in the documentation for the DEVICE. Should you have any questions concerning this EULA, or if you desire to contact FORD MOTOR COMPANY for any other reason, please refer to the address provided in the documentation for the DEVICE.

No Liability for Certain Damages: EXCEPT AS PROHIBITED BY LAW, FORD MOTOR COMPANY, ANY THIRD PARTY SOFTWARE OR SERVICES SUPPLIERS, MS, MICROSOFT CORPORATION AND THEIR AFFILIATES SHALL HAVE NO LIABILITY FOR ANY INDIRECT, SPECIAL, CONSEQUENTIAL OR INCIDENTAL DAMAGES ARISING FROM OR IN CONNECTION WITH THE USE OR PERFORMANCE OF THE SOFTWARE. THIS LIMITATION SHALL APPLY EVEN IF ANY REMEDY FAILS OF ITS ESSENTIAL PURPOSE. IN NO EVENT SHALL MS, MICROSOFT CORPORATION AND/OR THEIR AFFILIATES BE LIABLE FOR ANY AMOUNT IN EXCESS OF U.S. TWO HUNDRED FIFTY DOLLARS (U.S. $250.00).

- THERE ARE NO WARRANTIES OTHER THAN THOSE THAT MAY EXPRESSLY BE PROVIDED FOR YOUR NEW VEHICLE.

Adobe

Contains Adobe® [Flash® Player] or [AIR®] technology by Adobe Systems Incorporated. This [Licencee Product] contains [Adobe® Flash® Player] [Adobe® AIR®] software under licence from Adobe Systems Incorporated, Copyright ©1995-2009 Adobe Macromedia Software LLC. All rights reserved. Adobe, Flash and AIR are trademarks of Adobe Systems Incorporated.

End User Notice

Microsoft® Windows® Mobile for Automotive Important Safety Information

This system Ford SYNC™ contains software that is licenced to Manufacturer FORD MOTOR COMPANY by an affiliate of Microsoft Corporation pursuant to a licence agreement. Any removal, reproduction, reverse engineering or other unauthorised use of the software from this system in violation of the licence agreement is strictly prohibited and may subject you to legal action.

Read and follow instructions: Before using your Windows Automotive- based system, read and follow all instructions and safety information provided in this end user manual ("User's Guide"). Not following precautions found in this User's Guide can lead to an accident or other serious consequences.

Keep User's Guide in vehicle: When kept in the vehicle, the User's Guide will be a ready reference for you and other users unfamiliar with the Windows Automotive-based system. Please make certain that before using the system for the first time, all persons have access to the User's Guide and read its instructions and safety information carefully.

WARNING

Operating certain parts of this system while driving can distract your attention away from the road, and possibly cause an accident or other serious consequences. Do not change system settings or enter data non-verbally (using your hands) while driving. Stop the vehicle in a safe and legal manner before attempting these operations. This is important since while setting up or changing some functions you might be required to distract your attention away from the road and remove your hands from the wheel.

General Operation

Voice Command Control: Functions within the Windows Automotive-based system may be accomplished using only voice commands. Using voice commands while driving allows you to operate the system without removing your hands from the wheel.

Prolonged Views of Screen: Do not access any function requiring a prolonged view of the screen while you are driving. Pull over in a safe and legal manner before attempting to access a function of the system requiring prolonged attention. Even occasional short scans to the screen may be hazardous if your attention has been diverted away from your driving task at a critical time.

Volume Setting: Do not raise the volume excessively. Keep the volume at a level where you can still hear outside traffic and emergency signals while driving. Driving while unable to hear these sounds could cause an accident.

Use of Speech Recognition Functions: Speech recognition software is inherently a statistical process which is subject to errors. It is your responsibility to monitor any speech recognition functions included in the system and address any errors.

Navigation Features: Any navigation features included in the system are intended to provide turn by turn instructions to get you to a desired destination. Please make certain all persons using this system carefully read and follow instructions and safety information fully.

Distraction Hazard: Any navigation features may require manual (non-verbal) setup. Attempting to perform such set-up or insert data while driving can seriously distract your attention and could cause an accident or other serious consequences. Stop the vehicle in a safe and legal manner before attempting these operations.

Let Your Judgment Prevail: Any navigation features are provided only as an aid. Make your driving decisions based on your observations of local conditions and existing traffic regulations. Any such feature is not a substitute for your personal judgment. Any route suggestions made by this system should never replace any local traffic regulations or your personal judgment or knowledge of safe driving practices.

Route Safety: Do not follow the route suggestions if doing so would result in an unsafe or illegal manoeuver, if you would be placed in an unsafe situation, or if you would be directed into an area that you consider unsafe. The driver is ultimately responsible for the safe operation of the vehicle and therefore, must evaluate whether it is safe to follow the suggested directions.

Potential Map Inaccuracy: Maps used by this system may be inaccurate because of changes in roads, traffic controls or driving conditions. Always use good judgment and common sense when following the suggested routes.

Emergency Services: Do not rely on any navigation features included in the system to route you to emergency services. Ask local authorities or an emergency services operator for these locations. Not all emergency services such as police, fire stations, hospitals and clinics are likely to be contained in the map database for such navigation features.

TeleNav Software End User Licence Agreement

Please read these terms and conditions carefully before you use the TeleNav Software. Your use of the TeleNav Software indicates that you accept these terms and conditions. If you do not accept these terms and conditions, do not break the seal of the package, launch, or otherwise use the TeleNav Software.

TeleNav may revise this Agreement and the privacy policy at any time, with or without notice to you. You agree to visit http://www.telenav.com from time to time to review the then current version of this Agreement and of the privacy policy.

1. Safe and Lawful Use

You acknowledge that devoting attention to the TeleNav Software may pose a risk of injury or death to you and others in situations that otherwise require your undivided attention, and you therefore agree to comply with the following when using the TeleNav Software: (a) observe all traffic laws and otherwise drive safely; (b) use your own personal judgment while driving. If you feel that a route suggested by the TeleNav Software instructs you to perform an unsafe or illegal manoeuver, places you in an unsafe situation, or directs you into an area that you consider to be unsafe, do not follow such instructions; (c) do not input destinations, or otherwise manipulate the TeleNav Software, unless your vehicle is stationary and parked; (d) do not use the TeleNav Software for any illegal, unauthorised, unintended, unsafe, hazardous, or unlawful purposes, or in any manner inconsistent with this Agreement; (e) arrange all GPS and wireless devices and cables necessary for use of the TeleNav Software in a secure manner in your vehicle so that they will not interfere with your driving and will not prevent the operation of any safety device (such as an airbag).

You agree to indemnify and hold TeleNav harmless against all claims resulting from any dangerous or otherwise inappropriate use of the TeleNav Software in any moving vehicle, including as a result of your failure to comply with the directions above.

2. Account Information

You agree: (a) when registering the TeleNav Software, to provide TeleNav with true, accurate, current, and complete information about yourself, and (b) to inform TeleNav promptly of any changes to such information, and to keep it true, accurate, current and complete.

3. Software Licence

Subject to your compliance with the terms of this Agreement, TeleNav hereby grants to you a personal, non-exclusive, non-transferable licence (except as expressly permitted below in connection with your permanent transfer of the TeleNav Software licence), without the right to sublicence, to use the TeleNav Software (in object code form only) in order to access and use the TeleNav Software. This licence shall terminate upon any termination or expiration of this Agreement. You agree that you will use the TeleNav Software only for your personal business or leisure purposes, and not to provide commercial navigation services to other parties.

3.1 Licence Limitations

You agree not to do any of the following: (a) reverse engineer, decompile, disassemble, translate, modify, alter or otherwise change the TeleNav Software or any part thereof; (b) attempt to derive the source code, audio library or structure of the TeleNav Software without the prior express written consent of TeleNav; (c) remove from the TeleNav Software, or alter, any of TeleNav's or its suppliers' trademarks, trade names, logos, patent or copyright notices, or other notices or markings; (d) distribute, sublicence or otherwise transfer the TeleNav Software to others, except as part of your permanent transfer of the TeleNav Software; or (e) use the TeleNav Software in any manner that (i) infringes the intellectual property or proprietary rights, rights of publicity or privacy or other rights of any party, (ii) violates any law, statute, ordinance or regulation, including but not limited to laws and regulations related to spamming, privacy, consumer and child protection, obscenity or defamation, or (iii) is harmful, threatening, abusive, harassing, tortuous, defamatory, vulgar, obscene, libellous, or otherwise objectionable; and (f) lease, rent out, or otherwise permit unauthorised access by third parties to the TeleNav Software without advanced written permission of TeleNav.

4. Disclaimers

To the fullest extent permissible pursuant to applicable law, in no event will TeleNav, its licensors and suppliers, or agents or employees of any of the foregoing, be liable for any decision made or action taken by you or anyone else in reliance on the information provided by the TeleNav Software. TeleNav also does not warrant the accuracy of the map or other data used for the TeleNav Software. Such data may not always reflect reality due to, among other things, road closures, construction, weather, new roads and other changing conditions. You are responsible for the entire risk arising out of your use of the TeleNav Software. For example but without limitation, you agree not to rely on the TeleNav Software for critical navigation in areas where the well-being or survival of you or others is dependent on the accuracy of navigation, as the maps or functionality of the TeleNav Software are not intended to support such high risk applications, especially in more remote geographical areas.

TELENAV EXPRESSLY DISCLAIMS AND EXCLUDES ALL WARRANTIES IN CONNECTION WITH THE TELENAV SOFTWARE, WHETHER STATUTORY, EXPRESS OR IMPLIED, INCLUDING ALL WARRANTIES WHICH MAY ARISE FROM COURSE OF DEALING, CUSTOM OR TRADE AND INCLUDING, BUT NOT LIMITED TO, THE IMPLIED WARRANTIES OF MERCHANTABILITY, FITNESS FOR A

PARTICULAR PURPOSE AND NON-INFRINGEMENT OF THIRD PARTY RIGHTS WITH RESPECT TO THE TELENAV SOFTWARE. Certain jurisdictions do not permit the disclaimer of certain warranties, so this limitation may not apply to you.

5. Limitation of Liability

TO THE EXTENT PERMITTED UNDER APPLICABLE LAW, UNDER NO CIRCUMSTANCES SHALL TELENAV OR ITS LICENSORS AND SUPPLIERS BE LIABLE TO YOU OR TO ANY THIRD PARTY FOR ANY INDIRECT, INCIDENTAL, CONSEQUENTIAL, SPECIAL OR EXEMPLARY DAMAGES (INCLUDING IN EACH CASE, BUT NOT LIMITED TO, DAMAGES FOR THE INABILITY TO USE THE EQUIPMENT OR ACCESS DATA, LOSS OF DATA, LOSS OF BUSINESS, LOSS OF PROFITS, BUSINESS INTERRUPTION OR THE LIKE) ARISING OUT OF THE USE OF OR INABILITY TO USE THE TELENAV SOFTWARE, EVEN IF TELENAV HAS BEEN ADVISED OF THE POSSIBILITY OF SUCH DAMAGES.

NOTWITHSTANDING ANY DAMAGES THAT YOU MIGHT INCUR FOR ANY REASON WHATSOEVER (INCLUDING, WITHOUT LIMITATION, ALL DAMAGES REFERENCED HEREIN AND ALL DIRECT OR GENERAL DAMAGES IN CONTRACT, TORT (INCLUDING NEGLIGENCE) OR OTHERWISE), THE ENTIRE LIABILITY OF TELENAV AND OF ALL OF TELENAV'S SUPPLIERS SHALL BE LIMITED TO THE AMOUNT ACTUALLY PAID BY YOU FOR THE TELENAV SOFTWARE. SOME STATES AND/OR JURISDICTIONS DO NOT ALLOW THE EXCLUSION OR LIMITATION OF INCIDENTAL OR CONSEQUENTIAL DAMAGES, SO THE ABOVE LIMITATIONS OR EXCLUSIONS MAY NOT APPLY TO YOU.

6. Arbitration and Governing Law

You agree that any dispute, claim or controversy arising out of or relating to this Agreement or the TeleNav Software shall be settled by independent arbitration involving a neutral arbitrator and administered by the American Arbitration Association in the County of Santa Clara, California. The arbitrator shall apply the Commercial Arbitration Rules of the American Arbitration Association, and the judgment upon the award rendered by the arbitrator may be entered by any court having jurisdiction. Note that there is no judge or jury in an arbitration proceeding and the decision of the arbitrator shall be binding upon both parties. You expressly agree to waive your right to a jury trial.

This Agreement and performance hereunder will be governed by and construed in accordance with the laws of the State of California, without giving effect to its conflict of laws provisions. To the extent judicial action is necessary in connection with the binding arbitration, both TeleNav and you agree to submit to the exclusive jurisdiction of the courts of the County of Santa Clara, California. The United Nations Convention on Contracts for the International Sale of Goods shall not apply.

7. Assignment

You may not resell, assign, or transfer this Agreement or any of your rights or obligations, except in totality, in connection with your permanent transfer of the TeleNav Software, and expressly conditioned upon the new user of the TeleNav Software agreeing to be bound by the terms and conditions of this Agreement. Any such sale, assignment or transfer that is not expressly permitted under this paragraph will result in immediate termination of this Agreement, without liability to TeleNav, in which case you and all other parties shall immediately

cease all use of the TeleNav Software. Notwithstanding the foregoing, TeleNav may assign this Agreement to any other party at any time without notice, provided the assignee remains bound by this Agreement.

8. Miscellaneous

8.1

This Agreement constitutes the entire agreement between TeleNav and you with respect to the subject matter hereof.

8.2

Except for the limited licences expressly granted in this Agreement, TeleNav retains all right, title and interest in and to the TeleNav Software, including without limitation all related intellectual property rights. No licences or other rights which are not expressly granted in this Agreement are intended to, or shall be, granted or conferred by implication, statute, inducement, estoppel or otherwise, and TeleNav and its suppliers and licensors hereby reserve all of their respective rights other than the licences explicitly granted in this Agreement

8.3

By using the TeleNav Software, you consent to receive from TeleNav all communications, including notices, agreements, legally required disclosures or other information in connection with the TeleNav Software (collectively, "Notices") electronically. TeleNav may provide such Notices by posting them on TeleNav's Website or by downloading such Notices to your wireless device. If you desire to withdraw your consent to receive Notices electronically, you must discontinue your use of the TeleNav Software.

8.4

TeleNav's or your failure to require performance of any provision shall not affect that party's right to require performance at any time thereafter, nor shall a waiver of any breach or default of this Agreement constitute a waiver of any subsequent breach or default or a waiver of the provision itself.

8.5

If any provision herein is held unenforceable, then such provision will be modified to reflect the intention of the parties, and the remaining provisions of this Agreement will remain in full force and effect

8.6

The headings in this Agreement are for convenience of reference only, will not be deemed to be a part of this Agreement, and will not be referred to in connection with the construction or interpretation of this Agreement. As used in this Agreement, the words "include" and "including" and variations thereof, will not be deemed to be terms of limitation, but rather will be deemed to be followed by the words "without limitation".

9. Other Vendors Terms and Conditions

The TeleNav Software utilizes map and other data licenced to TeleNav by third party vendors for the benefit of you and other end users. This Agreement includes end-user terms applicable to these companies (included at the end of this Agreement), and thus your use of the TeleNav Software is also subject to such terms. You agree to comply with the following additional terms and conditions, which are applicable to TeleNav's third party vendor licensors:

NavTeq End User Licence Agreement

END USER TERMS

The content provided ("Data") is licenced, not sold. By opening this package, or installing, copying, or otherwise using the Data, you agree to be bound by the terms of this agreement. If you do not agree to the terms of this agreement, you are not permitted to install, copy, use, resell or transfer the Data. If you wish to reject the terms of this agreement, and have not installed, copied, or used the Data, you must contact your retailer or NAVTEQ North America, LLC ("NT") within thirty (30) days of purchase for a refund of your purchase price. To contact NT, please visit www.navteq.com.

The Data is provided for your personal, internal use only and may not be resold. It is protected by copyright, and is subject to the following terms (this "End User Licence Agreement") and conditions which are agreed to by you, on the one hand, and NAVTEQ North America, LLC ("NT") and its licensors (including their licensors and suppliers) on the other hand.

The Data for areas of Canada includes information taken with permission from Canadian authorities, including: © Her Majesty the Queen in Right of Canada, © Queen's Printer for Ontario, © Canada Post Corporation, GeoBase®.

NT holds a nonexclusive licence from the United States Postal Service ® to publish and sell ZIP+4 ® information.

© United States Postal Service ® 2009. Prices are not established, controlled or approved by the United States Postal Service ® The following trademarks and registrations are owned by the USPS: United States Postal Service, USPS, and ZIP+4.

The Data for Mexico includes certain Data from Instituto Nacional de Estadística y Geografía.

TERMS AND CONDITIONS

Licence Limitations on Use: You agree that your licence to use this Data is limited to and conditioned on use for solely personal, non-commercial purposes, and not for service bureau, timesharing or other similar purposes. Except as otherwise set forth herein, you agree not to otherwise reproduce, copy, modify, decompile, disassemble or reverse engineer any portion of this Data, and may not transfer or distribute it in any form, for any purpose, except to the extent permitted by mandatory laws.

Licence Limitations on Transfer: Your limited licence does not allow transfer or resale of the Data, except on the condition that you may transfer the Data and all accompanying materials on a permanent basis if: (a) you retain no copies of the Data; (b) the recipient agrees to the terms of this End User Licence Agreement; and (c) you transfer the Data in the exact same form as you purchased it by physically transferring the original media (e.g., the CD-ROM or DVD you purchased), all original packaging, all Manuals and other documentation. Specifically, Multi-disc sets may only be transferred or sold as a complete set as provided to you and not as a subset thereof.

Additional Licence Limitations: Except where you have been specifically licenced to do so by NT in a separate written agreement, and without limiting the preceding paragraph, your licence is conditioned on use of the Data as prescribed in this agreement, and you may not (a) use this Data with any products, systems, or applications installed or otherwise connected to or in communication with vehicles capable of vehicle navigation, positioning, dispatch,

real time route guidance, fleet management or similar applications; or (b) with, or in communication with, including without limitation, cellular phones, palmtop and handheld computers, pagers, and personal digital assistants or PDAs.

WARNING

This Data may contain inaccurate or incomplete information due to the passage of time, changing circumstances, sources used and the nature of collecting comprehensive geographic Data, any of which may lead to incorrect results.

No Warranty: This Data is provided to you "as is" , and you agree to use it at your own risk. NT and its licensors (and their licensors and suppliers) make no guarantees, representations or warranties of any kind, express or implied, arising by law or otherwise, including but not limited to, content, quality, accuracy, completeness, effectiveness, reliability, fitness for a particular purpose, usefulness, use or results to be obtained from this Data, or that the Data or server will be uninterrupted or error free.

Disclaimer of Warranty: NT AND ITS LICENSORS (INCLUDING THEIR LICENSORS AND SUPPLIERS) DISCLAIM ANY WARRANTIES, EXPRESS OR IMPLIED, OF QUALITY, PERFORMANCE, MERCHANTABILITY, FITNESS FOR A PARTICULAR PURPOSE OR NON-INFRINGEMENT. Some States, Territories and Countries do not allow certain warranty exclusions, so to that extent the above exclusion may not apply to you.

Disclaimer of Liability: NT AND ITS LICENSORS (INCLUDING THEIR LICENSORS AND SUPPLIERS) SHALL NOT BE LIABLE TO YOU IN RESPECT OF ANY CLAIM, DEMAND OR ACTION, IRRESPECTIVE OF THE NATURE OF THE CAUSE OF THE CLAIM, DEMAND OR ACTION ALLEGING ANY LOSS, INJURY OR DAMAGES, DIRECT OR INDIRECT, WHICH MAY RESULT FROM THE USE OR POSSESSION OF THIS DATA; OR FOR ANY LOSS OF PROFIT, REVENUE, CONTRACTS OR SAVINGS, OR ANY OTHER DIRECT, INDIRECT, INCIDENTAL, SPECIAL OR CONSEQUENTIAL DAMAGES ARISING OUT OF YOUR USE OF OR INABILITY TO USE THIS DATA, ANY DEFECT IN THIS DATA, OR THE BREACH OF THESE TERMS OR CONDITIONS, WHETHER IN AN ACTION IN CONTRACT OR TORT OR BASED ON A WARRANTY, EVEN IF NT OR ITS LICENSORS HAVE BEEN ADVISED OF THE POSSIBILITY OF SUCH DAMAGES. Some States, Territories and Countries do not allow certain liability exclusions or damages limitations, so to that extent the above may not apply to you.

Export Control: You agree not to export from anywhere any part of the Data or any direct product thereof except in compliance with, and with all licences and approvals required under, applicable export laws, rules and regulations, including but not limited to the laws, rules and regulations administered by the Office of Foreign Assets Control of the U.S. Department of Commerce and the Bureau of Industry and Security of the U.S. Department of Commerce. To the extent that any such export laws, rules or regulations prohibit NT from complying with any of its obligations hereunder to deliver or distribute Data, such failure shall be excused and shall not constitute a breach of this Agreement.

Entire Agreement: These terms and conditions constitute the entire agreement between NT (and its licensors, including their licensors and suppliers) and you pertaining to the subject matter hereof, and supersedes in their entirety any and all written or oral agreements previously existing between us with respect to such subject matter.

Severability: You and NT agree that if any portion of this agreement is found illegal or unenforceable, that portion shall be severed and the remainder of the Agreement shall be given full force and effect.

Governing Law: The above terms and conditions shall be governed by the laws of the State of Illinois, without giving effect to (i) its conflict of laws provisions, or (ii) the United Nations Convention for Contracts for the International Sale of Goods, which is explicitly excluded. You agree to submit to the personal jurisdiction of the State of Illinois for any and all disputes, claims and actions arising from or in connection with the Data provided to you hereunder.

Government End Users: If the Data is being acquired by or on behalf of the United States government or any other entity seeking or applying rights similar to those customarily claimed by the United States government, this Data is a "commercial term" as that term is defined at 48 C.F.R. ("FAR") 2.101, is licenced in accordance with this End User Licence Agreement, and each copy of Data delivered or otherwise furnished shall be marked and embedded as appropriate with the following "Notice of Use", and be treated in accordance with such Notice:

NOTICE OF USE

CONTRACTOR (MANUFACTURER/SUPPLIER)

NAME:

NAVTEQ

CONTRACTOR (MANUFACTURER/SUPPLIER)

ADDRESS:

425 West Randolph Street, Chicago, IL 60606.

This Data is a commercial item as defined in FAR 2.101

and is subject to the End User Licence Agreement under

which this Data was provided.

© 2011 NAVTEQ. All rights reserved.

If the Contracting Officer, federal government agency, or any federal official refuses to use the legend provided herein, the Contracting Officer, federal government agency, or any federal official must notify NAVTEQ prior to seeking additional or alternative rights in the Data.

Wi-Fi hotspot data provided by JiWire, © 2013 JiWire.

Gracenote® Copyright

CD and music-related data from Gracenote, Inc., copyright© 2000-2007 Gracenote. Gracenote Software, copyright © 2000-2007 Gracenote. This product and service may practice one or more of the following U.S. Patents #5,987,525, #6,061,680, #6,154,773, #6,161,132, #6,230,192, #6,230,207, #6.240,459, #6,330,593 and other patents issued or pending. Some services supplied under licence from Open Globe, Inc. for U.S. Patent: #6,304,523.

Gracenote and CDDB are registered trademarks of Gracenote. The Gracenote logo and logotype, and the "Powered by Gracenote™" logo are trademarks of Gracenote.

Gracenote® End User Licence Agreement (EULA)

This device contains software from Gracenote, Inc. of 2000 Powell Street Emeryville, California 94608 ("Gracenote").

The software from Gracenote (the "Gracenote Software") enables this device to do disc and music file identification and obtain music-related information, including name, artist, track, and title information ("Gracenote Data") from online servers ("Gracenote Servers"), and to perform other functions. You may use Gracenote Data only by means of the intended End User functions of this device.

This device may contain content belonging to Gracenote's providers. If so, all of the restrictions set forth herein with respect to Gracenote Data shall also apply to such content and such content providers shall be entitled to all of the benefits and protections set forth herein that are available to Gracenote.

You agree that you will use the content from Gracenote ("Gracenote Content") , Gracenote Data, the Gracenote Software, and Gracenote Servers for your own personal, non-commercial use only. You agree not to assign, copy, transfer or transmit the Gracenote Content, Gracenote Software or any Gracenote Data (except in a Tag associated with a music file) to any third party. YOU AGREE NOT TO USE OR EXPLOIT GRACENOTE CONTENT, GRACENOTE DATA, THE GRACENOTE SOFTWARE, OR GRACENOTE SERVERS, EXCEPT AS EXPRESSLY PERMITTED HEREIN.

You agree that your non-exclusive licences to use the Gracenote Content, Gracenote Data, the Gracenote Software, and Gracenote Servers will terminate if you violate these restrictions. If your licences terminate, you agree to cease any and all use of the Gracenote Content, Gracenote Data, the Gracenote Software, and Gracenote Servers. Gracenote, respectively, reserve all rights in Gracenote Data, the Gracenote Software, and the Gracenote Servers and Gracenote Content, including all ownership rights. Under no circumstances will either Gracenote become liable for any payment to you for any information that you provide, including any copyrighted material or music file information. You agree that Gracenote may enforce its respective rights, collectively or separately, under this agreement against you, directly in each company's own name.

Gracenote uses a unique identifier to track queries for statistical purposes. The purpose of a randomly assigned numeric identifier is to allow Gracenote to count queries without knowing anything about who you are. For more information, see the web page at www.gracenote.com for the Gracenote Privacy Policy.

THE GRACENOTE SOFTWARE, EACH ITEM OF GRACENOTE DATA AND THE GRACENOTE CONTENT ARE LICENCED TO YOU "AS IS". NEITHER GRACENOTE MAKES ANY REPRESENTATIONS OR WARRANTIES, EXPRESS OR IMPLIED, REGARDING THE ACCURACY OF ANY GRACENOTE DATA FROM THE GRACENOTE SERVERS OR GRACENOTE CONTENT. GRACENOTE COLLECTIVELY AND SEPARATELY RESERVE THE RIGHT TO DELETE DATA AND/OR CONTENT FROM THE COMPANIES' RESPECTIVE SERVERS OR, IN THE CASE OF GRACENOTE, CHANGE DATA CATEGORIES FOR ANY CAUSE THAT GRACENOTE DEEMS SUFFICIENT. NO WARRANTY IS MADE THAT EITHER GRACENOTE CONTENT OR THE GRACENOTE SOFTWARE OR GRACENOTE SERVERS ARE ERROR-FREE OR THAT THE FUNCTIONING OF THE GRACENOTE SOFTWARE OR GRACENOTE SERVERS WILL BE

UNINTERRUPTED. GRACENOTE IS NOT OBLIGATED TO PROVIDE YOU WITH ANY ENHANCED OR ADDITIONAL DATA TYPES THAT GRACENOTE MAY CHOOSE TO PROVIDE IN THE FUTURE AND IS FREE TO DISCONTINUE ITS ONLINE SERVICES AT ANY TIME. GRACENOTE DISCLAIM ALL WARRANTIES EXPRESS OR IMPLIED, INCLUDING, BUT NOT LIMITED TO, IMPLIED WARRANTIES OF MERCHANTABILITY, FITNESS FOR A PARTICULAR PURPOSE, TITLE, AND NON-INFRINGEMENT. NEITHER GRACENOTE WARRANTS THE RESULTS THAT WILL BE OBTAINED BY YOUR USE OF THE GRACENOTE SOFTWARE OR ANY GRACENOTE SERVER. IN NO CASE WILL GRACENOTE BE LIABLE FOR ANY CONSEQUENTIAL OR INCIDENTAL DAMAGES OR FOR ANY LOST PROFITS OR LOST REVENUES FOR ANY REASON WHATSOEVER.

© Gracenote 2007.

FCC ID: KMHSYNCG2

IC: 1422A-SYNCG2

This device complies with Part 15 of the FCC Rules and with RSS-210 of Industry Canada. Operation is subject to the following two conditions: (1) This device may not cause harmful interference, and (2) this device must accept any interference received, including interference that may cause undesired operation.

WARNING

Changes or modifications not expressively approved by the party responsible for compliance could void the user's authority to operate the equipment. The term "IC" before the radio certification number only signifies that Industry Canada technical specifications were met.

The antenna used for this transmitter must not be co-located or operating in conjunction with any other antenna or transmitter.

A

About This Manual....7
Protecting the Environment....7
Active City Stop....171
Principle of Operation....171
Active Park Assist....152
Principle of Operation....152
Adaptive cruise control (ACC)....157
Principle of Operation....157
Adjusting the Headlamps - Vehicles With: Adaptive Front Lighting/Xenon Headlamps....53
Adjusting the Steering Wheel....43
Air Vents....99
Centre air vents....99
Side air vent....100
Alarm....41
Principle of Operation....41
Alternative frequencies....257
Appendices....334
Arming the alarm....42
Arming the engine immobiliser....40
At a Glance....11
Front exterior overview....11
Instrument panel overview....13
Rear exterior overview....16
Vehicle interior overview....12
Audible Warnings and Indicators....77
Automatic transmission....77
Door open....77
Frost....77
Key outside car....77
Lights on....77
Low fuel....78
Seat belt reminder....78
Switching the chimes on and off....77
Audio Control....43
Type 1....43
Type 2....44
Audio introduction....244
Audio System Security....253
Audio troubleshooting....263
Audio Troubleshooting....263
Audio unit commands....269
Auxiliary input....273
CD Player....269
External devices - iPod....275
External devices - USB....273
Radio....270
Audio unit menus....257
Audio unit operation....254
Audio unit overview....245
Auto-Dimming Mirror....69
Autolamps....50
Automatic Climate Control....102
Air distribution....104
Blower....103
Cooling the interior quickly....104
Mono mode....103
Recirculated air....104
Setting the temperature....103
Switching off the automatic climate control....104
Switching the air conditioning on and off....104
To switch mono mode back on....103
To switch mono mode off....103
Windscreen defrosting and demisting....104
Automatic Main Beam Control....51
Activating the system....52
Manually overriding the system....52
Setting the system sensitivity....52
Automatic Transmission....137
Emergency park position release lever....139
Hints on driving with an automatic transmission....138
Selector lever positions....137
Sport mode and manual shifting....138
Automatic volume control....257
Autostore control....255
Autowipers....45
Auxiliary Heater....107
Diesel auxiliary heater (depending on country)....109
Fuel operated heater (depending on country)....109
Parking heater....107
Auxiliary input (AUX IN) socket....262
Auxiliary Input Socket....119

Auxiliary Power Points....118

B

Battery connection points....221
Blind Spot Monitor....69
Blind spot information system (BLIS)....69
Detection errors....70
System detection and alerts....69
Turning the system on and off....70
Using the system....69
Bluetooth setup....264
Handling of phones....264
Requirements for Bluetooth connection....264
Bottle Holder....121
Brake and Clutch Fluid Check....214
Brakes....140
Principle of Operation....140
Bulb Specification Chart....65

C

Capacities and Specifications....239
Technical Specifications....239
Cargo Nets....174
Cargo net....175
Luggage retention net....174
Catalytic Converter....132
Driving with a catalytic converter....132
Changing a Bulb....58
Approach lamp....60
Central high mounted brake lamp....64
Front fog lamps....61
Headlamp....58
Interior lamps....64
Luggage compartment lamp, footwell lamp and tailgate lamp....64
Number plate lamp....64
Rear lamps - 4 door....62
Rear lamps - 5 door....61
Side repeater....60
Changing a Fuse....190
Changing a Road Wheel....222
Assembling the wheel brace....224
Installing a road wheel....225
Jacking and lifting points....223
Locking wheel nuts....222
Removing a road wheel....225
Removing the wheel trim....224
Vehicle jack....222
Vehicles with a spare wheel....222
Changing the 12V Battery....221
Changing the remote control battery....30
Remote control with a folding key blade....30
Remote control without a folding key blade....31
Changing the Wiper Blades....47
Rear window wiper blade....48
Windscreen wiper blades....47
Checking the Wiper Blades....47
Childminder Mirror....119
Child Safety....18
Child Safety Locks....23
Electric child safety locks....23
Manual child safety locks....23
Child Seat Positioning....19
Child Seats....18
Child restraints for different mass groups....18
Cigar Lighter....118
Cleaning the Exterior....218
Body paintwork preservation....219
Cleaning the alloy wheels....218
Cleaning the chrome trim....218
Cleaning the headlamps....218
Cleaning the rear window....218
Cleaning the Interior....219
Instrument cluster screens, LCD screens, radio screens....219
Rear windows....219
Seat belts....219
Climate Control....99
Principle of Operation....99
Climate control commands....281
Climate....281
Clock....118
Coded keys....40
Cold Weather Precautions....186

Compact disc playback....259
Compact Disc Player....259
Compact disc track scanning....260
Type 1....260
Type 2 and 3....260
Connecting an external device....285
Connecting an external device - Vehicles With: Bluetooth....285
Connecting a Bluetooth audio device....285
Connectivity....284
General Information....284
Convenience features....118
Cornering Lamps....55
Cruise Control....155
Principle of Operation....155
Cup Holders....119
Rear seat armrest....119

D

Diesel Particulate Filter....126
Regeneration....126
Digital signal processing (DSP)....257
Changing the DSP settings....257
DSP equaliser....257
DSP occupancy....257
Direction Indicators....54
Disabling the passenger airbag....28
Disabling the passenger airbag....29
Enabling the passenger airbag....29
Fitting the passenger airbag deactivation switch....28
Disarming the alarm....42
Vehicles with keyless entry....42
Vehicles without keyless entry....42
Disarming the engine immobiliser....40
Dog Guard....175
Installing behind the front seats....176
Installing behind the rear seats....176
Door Edge Protection....39
Principle of Operation....39
Driver Alert....163
Principle of Operation....163
Driving Hints....186
Driving Through Water....186
Driving through water....186

E

Eco Mode....130
Principle of Operation....130
Electric exterior mirrors....68
Electric folding mirrors....68
Mirror tilting positions....68
Electric sunroof....105
Opening and closing the sunroof....106
Opening and closing the sunroof automatically....106
Sunroof anti-trap protection....106
Sunroof relearning....107
Sunroof safety mode....107
Tilting the sunroof....106
Electromagnetic compatibility....336
Ending compact disc playback....261
End User Licence Agreement....338
SYNC® End User Licence Agreement (EULA)....338
Engine Block Heater....127
Engine Coolant Check....213
Checking the coolant level....213
Topping up....213
Engine immobiliser....40
Principle of Operation....40
Engine Oil Check....212
Checking the oil level....212
Topping up....213
Engine Oil Dipstick - 1.0L EcoBoost....211
Engine Oil Dipstick - 1.6L Duratec-16V (Sigma)....211
Engine Oil Dipstick - 1.6L Duratorq-TDCi (DV) Diesel/2.0L Duratorq-TDCi (DW) Diesel....212
Engine Oil Dipstick - 1.6L EcoBoost SCTi (Sigma)....211
Engine Oil Dipstick - 2.0L Duratec-HE (MI4)....212
Engine Oil Dipstick - 2.0L EcoBoost SCTi (MI4)....211
Exterior Mirrors....67
Manual folding mirrors....67

F

Fastening the seat belts....26
Fast forward/reverse....259

First Aid Kit....188
Floor Mats....186
Forward alert function....161
Adjusting the warning sensitivity....161
Switching the system on and off....161
Front Fog Lamps....52
Fuel and Refuelling....131
Technical Specifications....135
Fuel Consumption....134
Fuel filler flap....132
Refuelling with a fuel can....134
Fuel Quality - Diesel....131
Long-term storage....132
Fuel Quality - E85....131
Long-term storage....131
Fuel Quality - Petrol....131
Fuse Box Locations....189
Engine compartment fuse box....189
Load compartment fuse box....189
Passenger compartment fuse box....189
Fuses....189
Fuse Specification Chart....191
Engine compartment fuse box....191
Load compartment fuse box....196
Passenger compartment fuse box....194

G

Gauges....72
Engine coolant temperature gauge....73
Fuel gauge....74
Oil pressure gauge....74
Oil temperature gauge....74
Turbocharger boost gauge....74
General Information on Radio Frequencies....30
Glasses Holder....119
Global Opening and Closing....37
Global closing....37
Global opening....37

H

Hazard Warning Flashers....54
Headlamp Levelling....53
Recommended headlamp levelling switch positions....54
Headlamp Washers....47
Head Restraints....111
Adjusting the head restraint....111
Removing the head restraints....112
Heated Seats....116
Heated Windows and Mirrors....105
Heated exterior mirrors....105
Heated windows....105
Hill Start Assist....143
Principle of Operation....143
Hints on Driving With Anti-Lock Brakes....140

I

Ignition Switch....122
Important audio information....244
Audio unit labels....244
Disc labels....244
Information Displays....79
General Information....79

Information Messages....87
Active City Stop....88
Airbag....88
Alarm....88
Automatic main beam control....88
Battery and charging system....89
Blind spot monitor....89
Child power lock....89
Climate control....89
Cruise control and Adaptive cruise control (ACC)....90
Doors open....90
Driver alert....90
Engine immobiliser....91
Hill start assist....91
Keyless entry....91
Lane keeping aid....92
Lighting....92
Maintenance....93
Message indicator....87
Occupant protection....93
Parking aid....93
Parking brake....94
Power steering....94
Stability control (ESP)....94
Starting the engine....95
Start-stop....96
Transmission....97
Tyre pressure monitoring system....98
Instrument Cluster....72
Instrument Lighting Dimmer....118
Interior Lamps....55
Ambient lighting....56
Interior lighting....55
Introduction....7
ISOFIX Anchor Points....22
Attaching a child seat with top tethers....22
Top tether anchor points - 4 door....22
Top tether anchor points - 5-door and estate....22

J

Jump-Starting the Vehicle....220
To connect the booster cables....220
To start the engine....221

K

Keyless Entry....35
Disabled keys....36
General information....35
Locking and unlocking the doors with the key blade....37
Locking the vehicle....35
Passive key....35
Unlocking the vehicle....36
Keyless Starting....124
Failure to start....125
Ignition on....125
Starting a diesel engine....125
Starting with automatic transmission....125
Starting with manual transmission....125
Stopping the engine when the vehicle is moving....126
Stopping the engine with the vehicle stationary....126
Keys and Remote Controls....30

L

Lane Departure Warning....165
Principle of Operation....165
Lane Keeping Aid....167
Principle of Operation....167
Lighting Control....49
Headlamp flasher....50
Home safe lighting....50
Lighting control positions....49
Main and dipped beam....50
Parking lamps....49
Lighting....49
General Information....49
Load Carrying....173
General Information....173
Loading the navigation data....295
Loading the navigation data....295

Locking and Unlocking....33
Double locking....33
Locking....33
Locking and unlocking confirmation....34
Locking and unlocking the doors from inside....34
Locking the doors individually with the key....34
Luggage compartment lid....34
Unlocking....33
Locks....33
Luggage Anchor Points....173
Luggage Covers....173
3-door and 5-door....174
Estate....174

M

Maintenance....201
General Information....201
Technical Specifications....214
Manual Climate Control....100
Air conditioning....101
Air distribution control....100
Blower....101
Heating the interior quickly....101
Recirculated air....101
Ventilation....101
Manual Seats....110
Adjusting the angle of the seatback....111
Adjusting the height of the driver's seat....111
Adjusting the lumbar support....111
Moving the seats backwards and forwards....110
Manual Transmission....137
Selecting reverse gear....137
Map updates....305
MP3 display options....260
CD text display options....261
MP3 file playback....260
Playing a multi session disc....260

N

Navigation introduction....289
General Information....289
Navigation Quick start....296
Vehicles with CD-SD navigation system or Sony CD-SD navigation system....297
Vehicles with mobile navigation system....296
Navigation system....302
Navigation unit overview....291
Vehicles with CD-SD navigation system....292
Vehicles with Sony CD-SD navigation system....294
News broadcasts....257

O

Occupant protection....25
Principle of Operation....25
On/off control....254
Opening and Closing the Bonnet....201
Closing the bonnet....202
Opening the bonnet....201

P

Parking Aids....145
Principle of Operation....145
Parking Aid - Vehicles With: Front and Rear Parking Aid....146
Manoeuvring with the parking aid....147
Switching the parking aid on and off....146
Parking Aid - Vehicles With: Rear Parking Aid....145
Parking Brake....140
Personalised Settings....86
Chime deactivation....87
Language setting....86
Measure units....87
Temperature units....87
Power Seats - Vehicles With: 6-Way Power Seats....113
Power Seats - Vehicles With: 8-Way Power Seats....114
Adjust the length of the seat cushion....115

Power Windows....66
Anti-trap function....66
Driver's door switches....66
Global opening and closing....66
Opening and closing the windows automatically....66
Resetting the memory of the electric windows....67
Safety switch for rear windows....66
Programming the remote control....30
Programming a new remote control....30
Reprogramming the unlocking function....30

R

Rear Fog Lamps....53
Rear Seats....115
Folding the rear seatbacks forwards....115
Folding the seatbacks up....116
Folding the seat cushions and the rear seatbacks forwards....116
Rear view camera....149
Principle of Operation....149
Rear View Camera....149
Activating the rear view camera....149
Deactivating the rear view camera....151
Using the display....150
Vehicles with parking aid....151
Rear Window Wiper and Washers....46
Intermittent wipe....46
Rear window washer....47
Reverse gear wipe....46
Refuelling - E85....134
Refuelling....134
Regional mode (REG)....258
Removing a Headlamp....57
Repairing Minor Paint Damage....219
Repeat compact disc tracks....259
Type 1....259
Type 2 and 3....259
Replacement Parts Recommendation....9
Collision Repairs....9
Scheduled Maintenance and Mechanical Repairs....9
Warranty on Replacement Parts....10
Retractable tow ball....180
Driving with a trailer....182
Fault conditions....182
Maintenance....183
Releasing the tow ball arm....181
Swivelling the tow ball arm in....182
Swivelling the tow ball arm out....182
Road Safety....289
Safety information....290
Roadside Emergencies....188
Roof Racks and Load Carriers....177
Installing the crossbars....177
Roof rack....177
Route displays....303
Junction zoom....303
Map display....303
Navigation display....303
Route options menu....302
Driver....302
Dynamic....302
Eco settings....302
Ferry/motorail....302
Motorway....302
Route....302
Seasonal roads....303
Toll....302
Toll sticker....303
Running-In....186
Brakes and clutch....186
Engine....186
Tyres....186

S

Safety Precautions....131
Satellite Navigation Unit Holder....120
Adjusting the holder....120
Seat belt height adjustment....27
Seat belt reminder....27
Deactivating the seat belt reminder....28
Rear seat belt reminder....28
Seats....110
Security code....253
Shuffle/random....259
Type 1....259
Type 2 and 3....259
Sitting in the Correct Position....110
Sound button....254

Speed Limiter....162
Principle of Operation....162
Stability Control....141
Principle of Operation....141
Starting a Diesel Engine....124
Cold or hot engine....124
Starting and Stopping the Engine....122
General Information....122
Starting a Petrol Engine - E85....123
Starting at low ambient temperatures....124
Starting a Petrol Engine....123
Cold or hot engine....123
Engine idle speed after starting....123
Flooded engine....123
Start-Stop....128
Principle of Operation....128
Station preset buttons....255
Station tuning control....254
DAB service linking....254
Manual tuning....254
Scan tuning....255
Seek tuning....254
Steering Wheel Lock....122
Vehicles with keyless starting....122
Vehicles without keyless starting....122
Steering Wheel....43
Storage Compartments....121
Switching Off the Engine....127
Vehicles with a turbocharger....127
Symbols Glossary....7
SYNC™ Applications and Services....320
In the Event of a Crash....322
Switching Emergency Assistance On and Off....321
SYNC Emergency Assistance....320
SYNC™....306
General Information....306
SYNC™ Troubleshooting....327
System settings....299
Audio settings....300
Clock settings....301
Menu structure - Information and entertainment display - All vehicles....300
Menu structure - Information and entertainment display - Vehicles with navigation system....299

T

Telephone commands....276
Create a phonebook....279
Main settings....280
Phone....276
Phone functions....277
Telephone controls....265
Remote control....265
Telephone setup....264
Bond another Bluetooth phone....265
Making a phone an active phone....265
Phonebook....264
Phonebook categories....265
Telephone....264
General Information....264
Temporary Mobility Kit....226
Checking the tyre pressure....229
General information....226
Inflating the tyre....227
Using the kit....227
Tow Ball....183
Driving with a trailer....184
Driving without a trailer....185
Inserting the tow ball arm....184
Maintenance....185
Removing the tow ball arm....185
Unlocking the tow ball arm mechanism....183
Towing a Trailer - 2.0L EcoBoost SCTi (MI4)....180
Towing a Trailer....180
Steep gradients....180
Towing Points....199
Installing the towing eye....199
Towing eye location....199

Towing the Vehicle on Four Wheels....199
All vehicles....199
Vehicles with automatic transmission....200
Towing....180
Track selection....259
Type 2 and 3....259
Traffic information control....255
Activating traffic announcements....255
Ending traffic announcements....256
Traffic announcement volume....256
Traffic Message Channel....304
Principle of Operation....304
Traffic Sign Recognition....169
Principle of Operation....169
Transmission....137
Trip Computer....86
Average fuel consumption....86
Average speed....86
Distance to empty....86
Instantaneous fuel consumption....86
Odometer....86
Outside air temperature....86
Resetting the trip computer....86
Trip Odometer....86
Type approvals....334
Certificate for United Arab Emirates....336
EU Declaration....336
FCC/INDUSTRY CANADA NOTICE....334
Laser sensor....335
RX-42 - declaration of conformity....334
Tyre Care....230
Tyre Pressure Monitoring System....231
System reset....232

U

Under Bonnet Overview - 1.0L EcoBoost....203
Under Bonnet Overview - 1.6L Duratec-16V (Sigma)....204
Under Bonnet Overview - 1.6L Duratorq-TDCi (DV) Diesel....209
Under Bonnet Overview - 1.6L EcoBoost SCTi (Sigma)....205
Under Bonnet Overview - 2.0L Duratec-HE (MI4)....207
Under Bonnet Overview - 2.0L Duratorq-TDCi (DW) Diesel....210
Under Bonnet Overview - 2.0L EcoBoost SCTi (MI4)....206
USB Port....119
Using Active City Stop - 2.0L EcoBoost SCTi (MI4)....172
Switching the system on and off....172
Using Active City Stop....171
Switching the system on and off....172
Using active park assist....152
Using Adaptive Cruise Control....159
Automatic deactivation....160
Changing the set speed....159
Setting a speed....159
Setting the vehicle gap....159
Switching the system off....160
Switching the system on....159
Temporarily deactivating the system....160
Using an iPod....287
Audio control....287
Operation....287
Using a USB device....286
Audio control....286
Operation....286
Using Cruise Control....155
Cancelling the set speed....156
Changing the set speed....155
Resuming the set speed....156
Setting a speed....155
Switching cruise control off....156
Switching cruise control on....155
Using driver alert....163
Resetting the system....164
Switching the system on and off....163
System display....164
System warnings....163
Using Eco mode....130
Resetting Eco mode....130
Using hill start assist....143
Activating the system....143
Deactivating the system....143
Vehicles with manual transmission only....143

Using lane departure warning.....165
Setting the steering wheel vibration level.....166
Setting the system sensitivity.....166
Switching the system on and off.....165
System warnings.....166
Using seat belts during pregnancy.....28
Using Snow Chains - 2.0L EcoBoost SCTi (MI4).....231
Vehicles with stability control (ESP).....231
Using Snow Chains.....230
Vehicles with stability control (ESP).....230
Using Stability Control - 2.0L EcoBoost SCTi (MI4).....142
Switching sport mode on.....142
Switching the system off.....142
Using Stability Control.....141
Using start-stop.....128
To re-start the engine.....129
To stop the engine.....128
Using SYNC™ With Your Media Player.....323
Accessing Your USB Song Library.....326
Bluetooth Devices and System Settings.....327
Connecting Your Media Player to the USB Port.....323
Media Menu Features.....325
Media Voice Commands.....324
What is Playing?.....323
Using SYNC™ With Your Phone.....310
Accessing Features Through the Mobile Phone Menu.....314
Accessing Your Mobile Phone Settings.....316
Bluetooth Devices.....318
Making a Call.....313
Mobile Phone Options During an Active Call.....313
Mobile Phone Voice Commands.....311
Pairing a Mobile Phone For the First Time.....310
Pairing Subsequent Mobile Phones.....310
Receiving a Call.....313
Text Messaging.....315
Using the lane keeping aid.....167
Switching the system on and off.....167
System warnings.....168
Using the speed limiter.....162
Intentionally exceeding the set speed limit.....162
Setting the speed limit.....162
Switching the system on and off.....162
System warnings.....162
Using the telephone.....265
Changing the active phone.....267
Debonding a bonded phone.....267
Making a call.....266
Muting the microphone.....267
Receiving an incoming call.....267
Receiving a second incoming call.....267
Using TMC.....304
Ending traffic announcements.....304
Hazard spot warning (depending on country).....304
Traffic announcement.....304
Using TMC messages.....304
Using traffic sign recognition.....169
Setting the System Speed Warning.....169
Switching the System On and Off.....169
System Display.....169
Using voice control.....268
Name tag.....269
System operation.....268
Using Voice Recognition.....307
Helpful Hints.....307
Initiating a Voice Session.....308
System Interaction and Feedback.....308
Using Winter Tyres.....230

V

Vehicle battery.....220
Vehicle Care.....218
Vehicle Identification Number.....238
Vehicle Identification Plate.....237
Vehicle identification.....237
Vehicle recovery.....199
Voice control.....268
Principle of Operation.....268
Voice Control.....44

W

Warning Lamps and Indicators....74
ABS warning lamp....74
Airbag warning lamp....75
Blind spot monitor indicator....75
Brake system lamp....75
Cruise control indicator....75
Direction indicators....75
Engine warning lamp....75
Forward alert warning indicator....75
Front fog lamp indicator....75
Frost warning lamp....75
Glow plug indicator....76
Headlamp indicator....76
Ignition warning lamp....76
Lane departure warning indicator....76
Low fuel level warning lamp....76
Low tyre pressure warning lamp....76
Main beam indicator....76
Message indicator....76
Oil pressure warning lamp....76
Rear fog lamp indicator....76
Seat belt reminder....76
Shift indicator....76
Stability control (ESP) indicator....77
Start-stop indicator....77
Warning Triangle....188
Washer Fluid Check....214
Waveband button....254
Wheels and Tyres....222
General Information....222
Technical Specifications....232
Windows and Mirrors....66
Windscreen Washers....46
Windscreen Wipers....45
Automatic wiper system....45
Intermittent wipe....45
Wipers and Washers....45