FORD **FIESTA** Owner's Manual

The information contained in this publication was correct at the time of going to print. In the interest of continuous development, we reserve the right to change specifications, design or equipment at any time without notice or obligation. No part of this publication may be reproduced, transmitted, stored in a retrieval system or translated into any language in any form by any means without our written permission. Errors and omissions excepted.

© Ford Motor Company 2014

All rights reserved.

Part Number: CG3582en 12/2014 20141218144540

Table of Contents

Introduction
About This Manual.....5
Symbols Glossary.....5
Data Recording.....7
Replacement Parts Recommendation.....8
Mobile Communications Equipment.....8

At a Glance
At a Glance.....9

Child Safety
Installing Child Seats.....15
Child Seat Positioning.....18
Child Safety Locks.....21

Safety Belts
Fastening the Safety Belts.....22
Safety Belt Height Adjustment.....23
Safety Belt Minder.....23

Supplementary Restraints System
Principle of Operation.....24
Driver Airbag.....24
Passenger Airbag.....25
Side Airbags.....26
Driver Knee Airbag.....26
Side Curtain Airbags.....26

Keys and Remote Controls
General Information on Radio Frequencies.....27
Remote Control.....27
Replacing a Lost Key or Remote Control.....30

MyKey™
Principle of Operation.....31
Creating a MyKey.....31
Programming a MyKey.....32
Clearing All MyKeys.....32
Checking MyKey System Status.....32
Using MyKey With Remote Start Systems.....33
MyKey Troubleshooting.....33

Locks
Locking and Unlocking.....35
Manual Liftgate.....37
Keyless Entry.....38

Security
Passive Anti-Theft System.....40
Anti-Theft Alarm.....40

Steering Wheel
Adjusting the Steering Wheel.....43
Audio Control.....43
Voice Control.....44
Cruise Control.....44

Wipers and Washers
Windshield Wipers.....45
Autowipers.....45
Windshield Washers.....46
Rear Window Wiper and Washers.....47

Lighting
General Information.....48
Lighting Control.....48
Autolamps.....49
Instrument Lighting Dimmer.....49
Headlamp Exit Delay.....49
Daytime Running Lamps.....50
Front Fog Lamps.....50
Rear Fog Lamps.....50
Headlamp Leveling.....50

Fiesta (CCN) Vehicles Built From: 12-01-2015 Vehicles Built Up To: 14-10-2015, CG3582en enGBR, Edition date: 12/2014, First Printing

Direction Indicators.....51
Interior Lamps.....51

Windows and Mirrors

Power Windows.....53
Global Opening and Closing.....54
Exterior Mirrors.....55
Interior Mirror.....56

Instrument Cluster

Gauges.....58
Warning Lamps and Indicators.....59
Warning Lamps and Indicators - 1.6L EcoBoost™.....62
Audible Warnings and Indicators.....64

Information Displays

General Information.....66
Clock.....69
Trip Computer.....69
Personalized Settings.....70
Information Messages.....71

Climate Control

Principle of Operation.....81
Air Vents.....81
Manual Climate Control.....82
Automatic Climate Control.....83
Hints on Controlling the Interior Climate.....84
Heated Windows and Mirrors.....87

Seats

Sitting in the Correct Position.....88
Head Restraints.....88
Manual Seats - 3-Door.....89
Manual Seats - 5-Door.....91
Rear Seats.....92
Heated Seats.....93

Auxiliary Power Points

Auxiliary Power Points.....94
Cigar Lighter.....94

Storage Compartments

Cup Holders.....95

Starting and Stopping the Engine

General Information.....96
Ignition Switch.....96
Keyless Starting.....96
Steering Wheel Lock.....98
Steering Wheel Lock - Vehicles With: Keyless Vehicle System.....98
Starting a Gasoline Engine.....99
Starting a Diesel Engine.....100
Diesel Particulate Filter.....100
Switching Off the Engine.....101

Unique Driving Characteristics

Auto-Start-Stop.....102

Fuel and Refueling

Safety Precautions.....104
Fuel Quality - Gasoline.....105
Fuel Quality - Diesel.....105
Running Out of Fuel.....105
Catalytic Converter.....106
Refueling.....107
Fuel Consumption.....108
Technical Specifications.....109

Transmission

Manual Transmission.....110
Automatic Transmission.....110
Hill Start Assist.....113

Fiesta (CCN) Vehicles Built From: 12-01-2015 Vehicles Built Up To: 14-10-2015, CG3582en enGBR, Edition date: 12/2014, First Printing

Table of Contents

Brakes
General Information....115
Hints on Driving With Anti-Lock Brakes....115
Parking Brake....115

Stability Control
Principle of Operation....117
Using Stability Control....117
Using Stability Control - 1.6L EcoBoost™....117

Parking Aids
Principle of Operation....119
Parking Aid....119
Rear View Camera....122

Cruise Control
Principle of Operation....124
Using Cruise Control....124

Driving Aids
Active City Stop....126

Load Carrying
General Information....128
Rear Under Floor Storage....128
Luggage Covers....129

Towing
Towing a Trailer....130
Towing a Trailer - 1.6L EcoBoost™....131
Tow Ball....131
Towing Points....134
Towing the Vehicle on Four Wheels....135

Driving Hints
Breaking-In....136
Cold Weather Precautions....136
Driving Through Water....136
Floor Mats....136

Roadside Emergencies
Hazard Warning Flashers....138
First Aid Kit....138
Warning Triangle....138
Jump Starting the Vehicle....138

Fuses
Fuse Box Locations....140
Fuse Specification Chart....141
Changing a Fuse....147

Maintenance
General Information....148
Opening and Closing the Hood....148
Under Hood Overview - 1.0L Duratec (48kW/65PS)....150
Under Hood Overview - 1.0L EcoBoost™....151
Under Hood Overview - 1.25L Duratec-16V (Sigma)....152
Under Hood Overview - 1.4L Duratec-16V (Sigma)....153
Under Hood Overview - 1.6L Duratec-16V Ti-VCT (Sigma)....154
Under Hood Overview - 1.6L EcoBoost™....155
Under Hood Overview - 1.5L Duratorq-TDCi Diesel....156
Under Hood Overview - 1.6L Duratorq-TDCi (DV) Diesel....157
Engine Oil Dipstick - 1.0L EcoBoost™....158
Engine Oil Dipstick - 1.25L Duratec-16V (Sigma)....158
Engine Oil Dipstick - 1.4L Duratec-16V (Sigma)....158
Engine Oil Dipstick - 1.6L Duratec-16V Ti-VCT (Sigma)....158
Engine Oil Dipstick - 1.5L Duratorq-TDCi Diesel....159

Fiesta (CCN) Vehicles Built From: 12-01-2015 Vehicles Built Up To: 14-10-2015, CG3582en enGBR, Edition date: 12/2014, First Printing

Engine Oil Dipstick - 1.6L Duratorq-TDCi (DV) Diesel....159
Engine Oil Check....159
Engine Coolant Check....160
Brake and Clutch Fluid Check....161
Washer Fluid Check....161
Changing the 12V Battery....161
Checking the Wiper Blades....162
Changing the Wiper Blades....162
Removing a Headlamp....162
Changing a Bulb - 3-Door....163
Changing a Bulb - 5-Door....169
Bulb Specification Chart....175
Technical Specifications....176

Vehicle Care

Cleaning the Exterior....180
Cleaning the Interior....180
Repairing Minor Paint Damage....181
Cleaning the Alloy Wheels....181

Wheels and Tires

General Information....182
Temporary Mobility Kit....182
Tire Care....185
Using Winter Tires....185
Using Snow Chains....186
Tire Pressure Monitoring System - Vehicles Built From: 07-04-2014....186
Changing a Road Wheel....189
Technical Specifications....194

Capacities and Specifications

Vehicle Identification Plate....199
Vehicle Identification Number....200
Technical Specifications....200

Audio System

General Information....203
Audio Unit - Vehicles With: AM/FM/CD....204
Audio Unit - Vehicles With: AM/FM/CD/Bluetooth/SYNC....209
Audio Unit - Vehicles With: AM/FM/CD/Bluetooth/Navigation System....215
Audio Unit - Vehicles With: Sony AM/FM/CD....221
Audio Unit - Vehicles With: Navigation System/Sony AM/FM/CD....227
Digital Radio....233
Audio Input Jack....235
USB Port....235
Audio Troubleshooting....236

SYNC™

General Information....237
Using Voice Recognition....238
Using SYNC™ With Your Phone....241
SYNC™ Applications and Services....252
Using SYNC™ With Your Media Player....259
SYNC™ Troubleshooting....267

Navigation

Navigation....277

Appendices

Electromagnetic Compatibility....286
End User License Agreement....287

Fiesta (CCN) Vehicles Built From: 12-01-2015 Vehicles Built Up To: 14-10-2015, CG3582en enGBR, Edition date: 12/2014, First Printing

ABOUT THIS MANUAL

Thank you for choosing Ford. We recommend that you take some time to get to know your vehicle by reading this manual. The more that you know about it, the greater the safety and pleasure you will get from driving it.

WARNING

Driving while distracted can result in loss of vehicle control, crash and injury. We strongly recommend that you use extreme caution when using any device that may take your focus off the road. Your primary responsibility is the safe operation of your vehicle. We recommend against the use of any hand-held device while driving and encourage the use of voice-operated systems when possible. Make sure you are aware of all applicable local laws that may affect the use of electronic devices while driving.

Note: *This manual describes product features and options available throughout the range of available models, sometimes even before they are generally available. It may describe options not fitted to the vehicle you have purchased.*

Note: *Some of the illustrations in this manual may show features as used in different models, so may appear different to you on your vehicle.*

Note: *Always use and operate your vehicle in line with all applicable laws and regulations.*

Note: *Pass on this manual when selling your vehicle. It is an integral part of your vehicle.*

This manual may qualify the location of a component as left-hand side or right-hand side. The side is determined when facing forward in the seat.

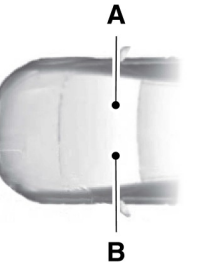

E154903

A Right-hand side.

B Left-hand side.

SYMBOLS GLOSSARY

These are some of the symbols you may see on your vehicle.

Safety alert

See Owner's Manual

Air conditioning system

Anti-lock braking system

Avoid smoking, flames or sparks

Battery

Battery acid

Brake fluid - non petroleum based

Fiesta (CCN) Vehicles Built From: 12-01-2015 Vehicles Built Up To: 14-10-2015, CG3582en enGBR, Edition date: 12/2014, First Printing

Brake system

Cabin air filter

Check fuel cap

Child safety door lock or unlock

Child seat lower anchor

Child seat tether anchor

Cruise control

Do not open when hot

Engine air filter

Engine coolant

Engine coolant temperature

Engine oil

Explosive gas

Fan warning

Fasten safety belt

Front airbag

Front fog lamps

Fuel pump reset

Fuse compartment

Hazard warning flashers

Heated rear window

Heated windshield

Interior luggage compartment release

Jack

Keep out of reach of children

Lighting control

Low tire pressure warning

Maintain correct fluid level

Note operating instructions

Panic alarm

Fiesta (CCN) Vehicles Built From: 12-01-2015 Vehicles Built Up To: 14-10-2015, CG3582en enGBR, Edition date: 12/2014, First Printing

Parking aid

Parking brake

Power steering fluid

Power windows front/rear

Power window lockout

Service engine soon

Side airbag

Shield the eyes

Stability control

Windshield wash and wipe

DATA RECORDING

A large number of electronic components of your vehicle contain data storage modules temporarily or permanently storing technical data about the condition of the vehicle, events and errors.

In general, this technical information documents the condition of parts, modules, systems or the environment:

- Operating conditions of system components (e.g. filling levels).
- Status messages of the vehicle and its individual components (e.g. number of wheel revolutions/rotational speed, deceleration, lateral acceleration).
- Malfunction and defects in important system components (e.g. lighting and brake system).
- Vehicle reactions in particular driving situations (e.g. inflation of an airbag, activation of the stability regulation system).
- Environmental conditions (e.g. temperature).

These data are exclusively technical and help identification and correction of errors as well as optimisation of vehicle functions. Motion profiles indicating travelled routes cannot be created with these data.

If services are used (e.g. repair works, service processes, warranty cases, quality assurance), employees of the service network (including manufacturers) are able to read out this technical information from the event and error data storage modules using special diagnostic devices. If required, you will receive further information. After an error has been corrected, these data are deleted from the error storage module or they are constantly overwritten.

When using the vehicle, situations may occur in which these technical data related to other information (accident report, damages on the vehicle, witness statements etc.) may be associated with a specific person - possibly, with the assistance of an expert.

Fiesta (CCN) Vehicles Built From: 12-01-2015 Vehicles Built Up To: 14-10-2015, CG3582en enGBR, Edition date: 12/2014, First Printing

Additional functions contractually agreed upon with the client (e.g. vehicle location in emergency cases) allow the transmission of particular vehicle data from the vehicle.

REPLACEMENT PARTS RECOMMENDATION

Your vehicle has been built to the highest standards using quality parts. We recommend that you demand the use of genuine Ford and Motorcraft parts whenever your vehicle requires scheduled maintenance or repair. You can clearly identify genuine Ford and Motorcraft parts by looking for the Ford, FoMoCo or Motorcraft branding on the parts or their packaging.

Scheduled Maintenance and Mechanical Repairs

One of the best ways for you to make sure that your vehicle provides years of service is to have it maintained in line with our recommendations using parts that conform to the specifications detailed in this Owner's Manual. Genuine Ford and Motorcraft parts meet or exceed these specifications.

Collision Repairs

We hope that you never experience a collision, but accidents do happen. Genuine Ford replacement collision parts meet our stringent requirements for fit, finish, structural integrity, corrosion protection and dent resistance. During vehicle development we validate these parts deliver the intended level of protection as a whole system. A great way to know for sure you are getting this level of protection is to use genuine Ford replacement collision parts.

Warranty on Replacement Parts

Genuine Ford and Motorcraft replacement parts are the only replacement parts that benefit from a Ford Warranty. Damage caused to your vehicle as a result of the failure of non-Ford parts may not be covered by the Ford Warranty. For additional information, refer to the terms and conditions of the Ford Warranty.

MOBILE COMMUNICATIONS EQUIPMENT

Using mobile communications equipment is becoming increasingly important in the conduct of business and personal affairs. However, you must not compromise your own or others' safety when using such equipment. Mobile communications can enhance personal safety and security when appropriately used, particularly in emergency situations. Safety must be paramount when using mobile communications equipment to avoid negating these benefits. Mobile communication equipment includes, but is not limited to, cellular phones, pagers, portable email devices, text messaging devices and portable two-way radios.

WARNING

Driving while distracted can result in loss of vehicle control, crash and injury. We strongly recommend that you use extreme caution when using any device that may take your focus off the road. Your primary responsibility is the safe operation of your vehicle. We recommend against the use of any hand-held device while driving and encourage the use of voice-operated systems when possible. Make sure you are aware of all applicable local laws that may affect the use of electronic devices while driving.

Fiesta (CCN) Vehicles Built From: 12-01-2015 Vehicles Built Up To: 14-10-2015, CG3582en enGBR, Edition date: 12/2014, First Printing

Front Exterior Overview

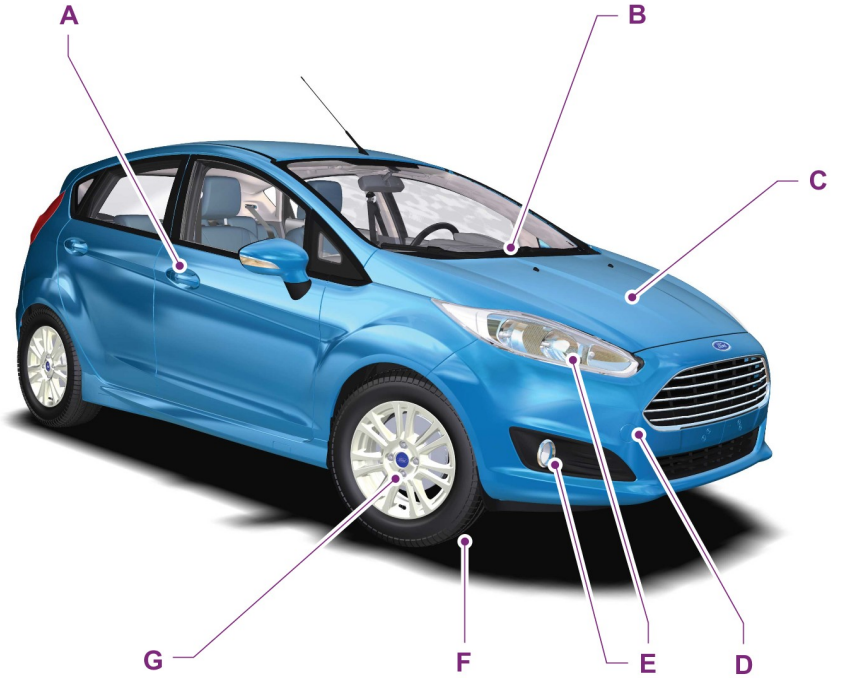

E151918

A See **Locking and Unlocking** (page 35). See **Keyless Entry** (page 38).
B See **Changing the Wiper Blades** (page 162).
C See **Maintenance** (page 148).
D See **Towing Points** (page 134).
E See **Changing a Bulb** (page 169).
F Tire pressures. See **Technical Specifications** (page 194).
G See **Changing a Road Wheel** (page 189).

Fiesta (CCN) Vehicles Built From: 12-01-2015 Vehicles Built Up To: 14-10-2015, CG3582en enGBR, Edition date: 12/2014, First Printing

Vehicle Interior Overview

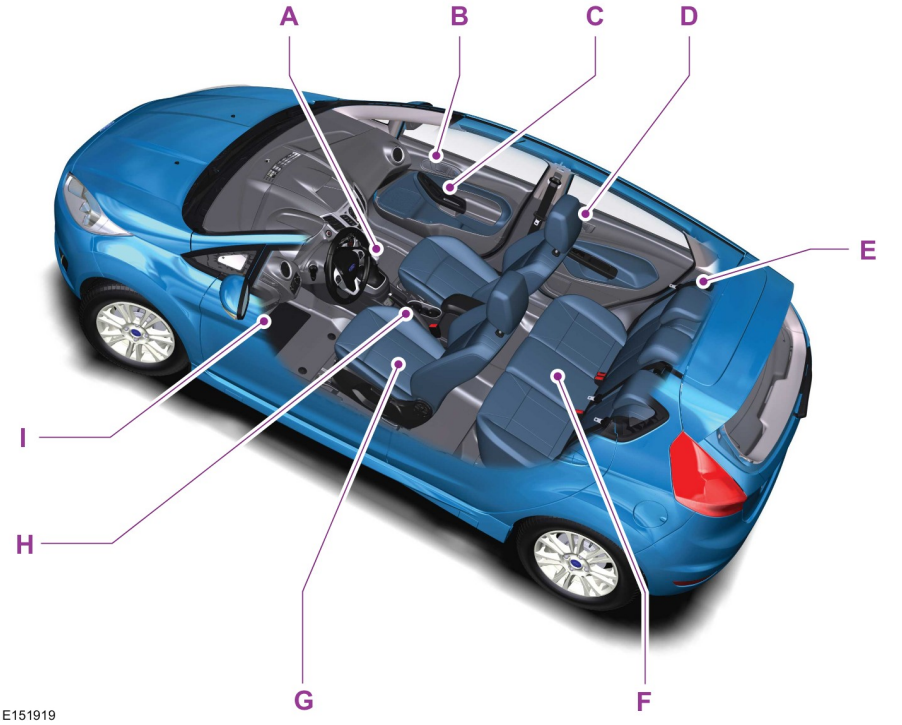

A See **Transmission** (page 110).
B See **Locking and Unlocking** (page 35).
C See **Power Windows** (page 53). See **Exterior Mirrors** (page 55).
D See **Head Restraints** (page 88).
E See **Fastening the Safety Belts** (page 22).
F See **Rear Seats** (page 92).
G See **Manual Seats** (page 89).
H See **Parking Brake** (page 115).
I See **Opening and Closing the Hood** (page 148).

Fiesta (CCN) Vehicles Built From: 12-01-2015 Vehicles Built Up To: 14-10-2015, CG3582en enGBR, Edition date: 12/2014, First Printing

Instrument Panel Overview

Left-Hand Drive

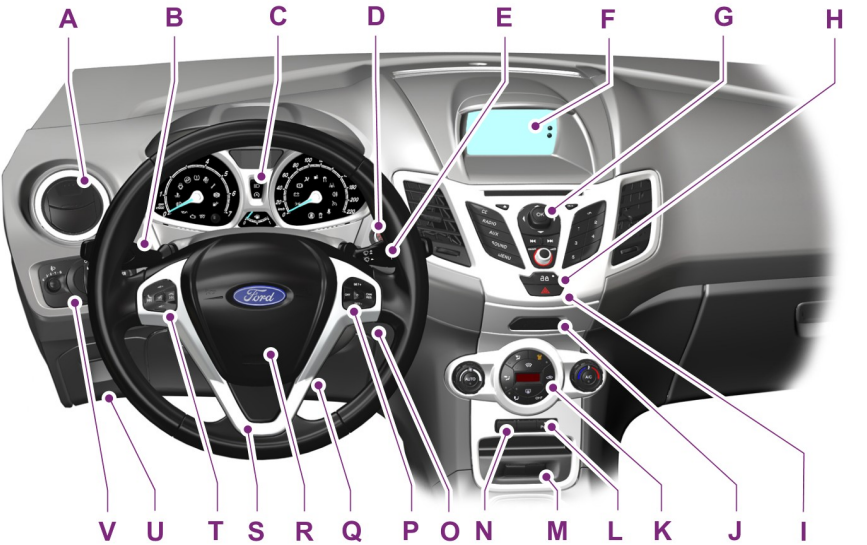

E156625

Fiesta (CCN) Vehicles Built From: 12-01-2015 Vehicles Built Up To: 14-10-2015, CG3582en enGBR, Edition date: 12/2014, First Printing

Right-Hand Drive

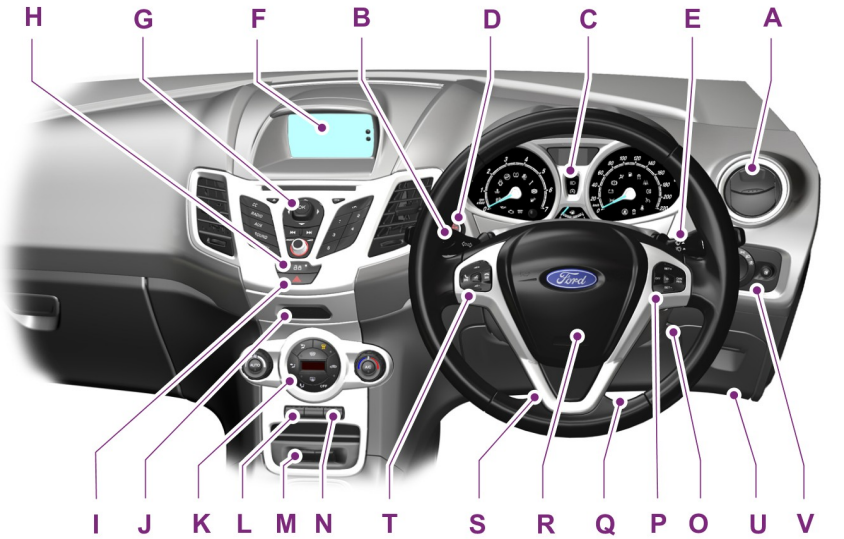

E156626

A Air vents. See **Air Vents** (page 81).

B Direction indicators. See **Direction Indicators** (page 51). High beam. See **Lighting Control** (page 48).

C Instrument cluster. See **Gauges** (page 58). See **Warning Lamps and Indicators** (page 59).

D Start button. See **Starting and Stopping the Engine** (page 96).

E Wiper lever. See **Wipers and Washers** (page 45).

F Information and entertainment display. See **Information Displays** (page 66).

G Audio unit. See **Audio System** (page 203).

H Power door lock button. See **Locking and Unlocking** (page 35).

I Hazard warning flasher switch. See **Hazard Warning Flashers** (page 138).

J Airbag warning lamp. See **Passenger Airbag** (page 25).

K Climate controls. See **Climate Control** (page 81).

K Heated rear window switch. See **Climate Control** (page 81).

Fiesta (CCN) Vehicles Built From: 12-01-2015 Vehicles Built Up To: 14-10-2015, CG3582en enGBR, Edition date: 12/2014, First Printing

K Heated windshield switch. See **Climate Control** (page 81).
L Parking aid switch. See **Parking Aids** (page 119).
M Heated seat switches. See **Heated Seats** (page 93).
N Start-stop switch. See **Auto-Start-Stop** (page 102).
O Ignition switch. See **Ignition Switch** (page 96).
P Cruise control switches. See **Using Cruise Control** (page 124).
Q Driver knee airbag. See **Driver Knee Airbag** (page 26).
R Horn.
S Steering wheel adjustment. See **Adjusting the Steering Wheel** (page 43).
T Audio control. See **Audio System** (page 203). Voice control. See **Voice Control** (page 44).
U Hood release lever. See **Opening and Closing the Hood** (page 148).
V Lighting control. See **Lighting** (page 48).

Fiesta (CCN) Vehicles Built From: 12-01-2015 Vehicles Built Up To: 14-10-2015, CG3582en enGBR, Edition date: 12/2014, First Printing

Rear Exterior Overview

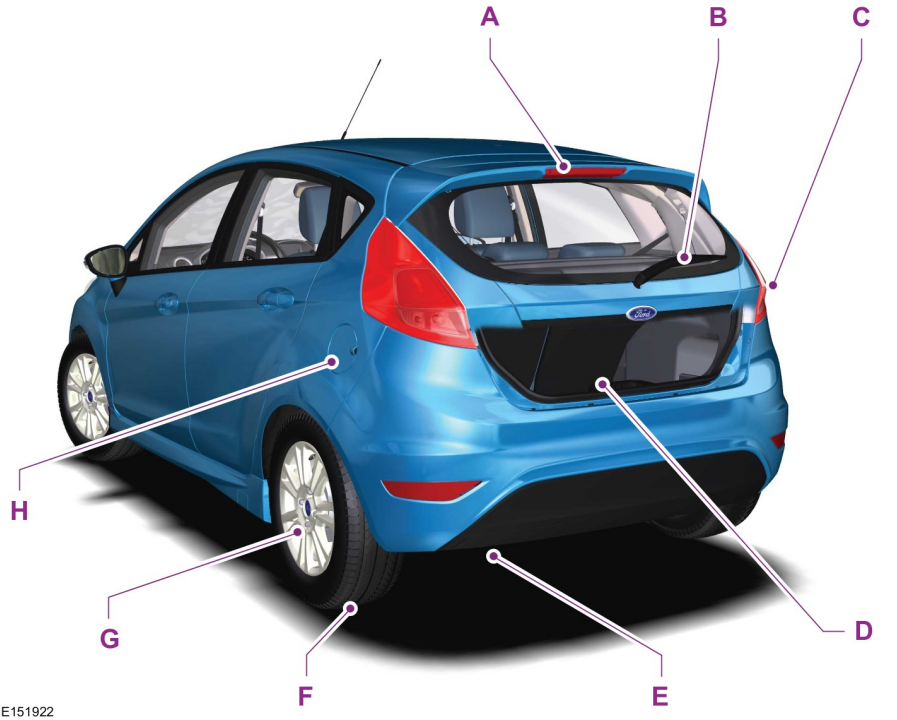

E151922

A See **Changing a Bulb** (page 169).

B See **Changing the Wiper Blades** (page 162).

C See **Changing a Bulb** (page 169).

D See **First Aid Kit** (page 138). See **Warning Triangle** (page 138). See **Temporary Mobility Kit** (page 182). Spare wheel, jack and wheel brace. See **Changing a Road Wheel** (page 189). Towing eye. See **Towing Points** (page 134).

E See **Towing Points** (page 134).

F Tire pressures. See **Technical Specifications** (page 194).

G See **Changing a Road Wheel** (page 189).

H See **Refueling** (page 107).

Fiesta (CCN) Vehicles Built From: 12-01-2015 Vehicles Built Up To: 14-10-2015, CG3582en enGBR, Edition date: 12/2014, First Printing

INSTALLING CHILD SEATS

E161855

E68916

WARNINGS

Use an approved child seat to secure children less than 59 in (150 cm) tall in the rear seat.

Extreme Hazard! Never use a rearward facing child restraint on a seat protected by an active airbag in front of it. Death or serious injury to the child can occur. You must switch the passenger airbag off when using a rearward facing child seat on the front seat. See **Passenger Airbag** (page 25).

You must switch the passenger airbag on following the removal of the child seat. See **Passenger Airbag** (page 25).

Read and follow the manufacturer's instructions when you are installing a child seat.

WARNINGS

Do not modify child seats in any way.

Do not hold a child on your lap when the vehicle is moving.

Do not leave unattended children in your vehicle.

If your vehicle has been involved in an accident, have the child seats checked by an authorized dealer.

Note: *Mandatory use of child seats varies from country to country.*

Only child seats certified to ECE-R44.03 (or later) have been tested and approved for use in your vehicle. A choice of these are available from an authorized dealer.

Child Seats for Different Mass Groups

Use the correct child seat as follows:

Baby Safety Seat

E68918

Secure children that weigh less than 29 lb (13 kg) in a rearward facing baby safety seat (Group 0+) on the rear seat.

Fiesta (CCN) Vehicles Built From: 12-01-2015 Vehicles Built Up To: 14-10-2015, CG3582en enGBR, Edition date: 12/2014, First Printing

Child Safety Seat

E68920

Secure children that weigh between 29 lb (13 kg) and 40 lb (18 kg) in a child safety seat (Group 1) on the rear seat.

Booster Seats

WARNINGS

Do not install a booster seat or a booster cushion with only the lap strap of the safety belt.

Do not install a booster seat or a booster cushion with a safety belt that is slack or twisted.

Do not put the safety belt under your child's arm or behind its back.

Do not use pillows, books or towels to boost your child's height.

Make sure that your children sit in an upright position.

When using a child seat on a rear seat, the child seat must rest tightly against the vehicle seat. It must not touch the head restraint. If necessary remove the head restraint. See **Head Restraints** (page 88).

WARNINGS

You must reinstall the head restraint following the removal of the child seat. See **Head Restraints** (page 88).

Booster Seat (Group 2)

E70710

Secure children that weigh more than 33 lb (15 kg) but are less than 59 in (150 cm) tall in a booster seat or a booster cushion.

We recommend that you use a booster seat that combines a cushion with a backrest instead of a booster cushion only. The raised seating position will allow you to position the shoulder strap of the adult safety belt over the center of your child's shoulder and the lap strap tightly across its hips.

Fiesta (CCN) Vehicles Built From: 12-01-2015 Vehicles Built Up To: 14-10-2015, CG3582en enGBR, Edition date: 12/2014, First Printing

Booster Cushion (Group 3)

E68924

ISOFIX Anchor Points

WARNING

Use an anti-rotation device when using the ISOFIX system. We recommend the use of a top tether or support leg.

Note: *When you are purchasing an ISOFIX seat, make sure that you know the correct mass group and ISOFIX size class for the intended seating locations. See* ***Child Seat Positioning*** *(page 18).*

Your vehicle has ISOFIX anchor points that accommodate universally approved ISOFIX child seats.

The ISOFIX system comprises two rigid attachment arms on the child seat that attach to anchor points on the outboard rear seats, where the cushion and backrest meet. Tether anchor points are located behind the outboard rear seats for child seats with a top tether.

Top Tether Anchor Points

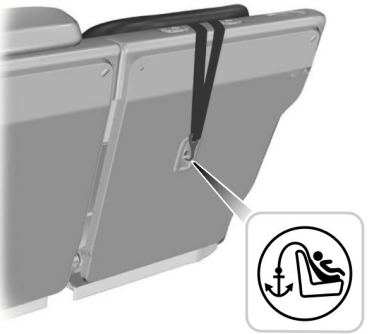

E87146

Attaching a Child Seat with Top Tethers

WARNINGS

Do not attach a tether strap to anything other than the correct tether anchor point.

Make sure that the top tether strap is not slack or twisted and is properly located on the anchor point.

Note: *Where applicable, remove the luggage cover to ease installation. See* ***Luggage Covers*** *(page 129).*

1. Route the tether strap to the anchor point.

Fiesta (CCN) Vehicles Built From: 12-01-2015 Vehicles Built Up To: 14-10-2015, CG3582en enGBR, Edition date: 12/2014, First Printing

E87145

2. Push the child seat back firmly to engage the ISOFIX lower anchor points.
3. Tighten the tether strap in line with the child seat manufacturer's instructions.

CHILD SEAT POSITIONING

WARNINGS

See an authorized dealer for the latest details relating to our recommended child seats.

WARNINGS

Extreme Hazard! Never use a rearward facing child restraint on a seat protected by an active airbag in front of it. Death or serious injury to the child can occur.

When using a child seat with a support leg, the support leg must rest securely on the floor.

When using a child seat with a safety belt, make sure that the safety belt is not slack or twisted.

The child seat must rest tightly against the vehicle seat. It must not touch the head restraint. If necessary remove the head restraint. See **Head Restraints** (page 88).

You must reinstall the head restraint following the removal of the child seat. See **Head Restraints** (page 88).

Fiesta (CCN) Vehicles Built From: 12-01-2015 Vehicles Built Up To: 14-10-2015, CG3582en enGBR, Edition date: 12/2014, First Printing

Seating positions	Mass group categories				
	0	0+	1	2	3
	Up to 22 lbs (10 kg)	Up to 29 lbs (13 kg)	20 - 40 lbs (9 - 18 kg)	33 - 55 lbs (15 - 25 kg)	46 - 79 lbs (22 - 36 kg)
Front passenger seat with airbag **ON**	X	X	UF[1]	UF[1]	UF[1]
Front passenger seat with airbag **OFF**	U[1]	U[1]	U[1]	U[1]	U[1]
Rear seats	U	U	U	U	U

X Not suitable for children in this mass group.

U Suitable for universal category child seats approved for use in this mass group.

U[1] Suitable for universal category child seats approved for use in this mass group. However, we recommend that you secure children in a government approved child seat, on the rear seat.

UF[1] Suitable for universal category forward facing child seats approved for use in this mass group. However, we recommend that you secure children in a government approved child seat, on the rear seat.

Note: *When using a child seat on a front seat, always adjust the front passenger's seat to its fully rearward position. If it proves difficult to tighten the lap section of the safety belt without slack remaining, adjust the seatback to the fully upright position and raise the height of the seat. See* ***Seats*** *(page 88).*

ISOFIX Child Seats

Seating positions		Mass group categories	
		0+	1
		Rear facing	Forward facing
		Up to 29 lbs (13 kg)	20 - 40 lbs (9 - 18 kg)
Front seat	Size class	Not ISOFIX equipped	
	Seat type		
Rear outboard seat ISOFIX	Size class	E[1]	B, B1[1]

Fiesta (CCN) Vehicles Built From: 12-01-2015 Vehicles Built Up To: 14-10-2015, CG3582en enGBR, Edition date: 12/2014, First Printing

Seating positions		Mass group categories	
		0+	1
		Rear facing	Forward facing
		Up to 29 lbs (13 kg)	20 - 40 lbs (9 - 18 kg)
	Seat type	IL[2]	IL, IUF[3]
Rear center seat	Size class	Not ISOFIX equipped	
	Seat type		

IL Suitable for particular ISOFIX child restraints systems of the semi-universal category. Please consult child restraints systems suppliers' vehicle recommendation lists.

IUF Suitable for ISOFIX forward facing child restraints systems of universal category approved for use in this mass group and ISOFIX size class.

[1]The ISOFIX size class for both universal and semi-universal child seat systems is defined by the capital letters A to G. These identification letters are displayed on the ISOFIX child seat.

[2]At time of publishing the recommended Group O+ ISOFIX baby safety seat is the Britax Romer Baby Safe. See an authorized dealer for the latest details relating to our recommended child seats.

[3]At time of publishing the recommended Group 1 ISOFIX child seat is the Britax Romer Duo. See an authorized dealer for the latest details relating to our recommended child seats.

Fiesta (CCN) Vehicles Built From: 12-01-2015 Vehicles Built Up To: 14-10-2015, CG3582en enGBR, Edition date: 12/2014, First Printing

CHILD SAFETY LOCKS

WARNING

You cannot open the rear doors from inside if you have put the child safety locks on.

E156821

Left-Hand Side

Turn counterclockwise to lock and clockwise to unlock.

Right-Hand Side

Turn clockwise to lock and counterclockwise to unlock.

Fiesta (CCN) Vehicles Built From: 12-01-2015 Vehicles Built Up To: 14-10-2015, CG3582en enGBR, Edition date: 12/2014, First Printing

FASTENING THE SAFETY BELTS

WARNINGS

Insert the tongue into the buckle until you hear a distinct click. You have not fastened the safety belt correctly if you do not hear a click.

Make sure that your safety belt is securely stored away and is not outside your vehicle when closing the door.

E74124

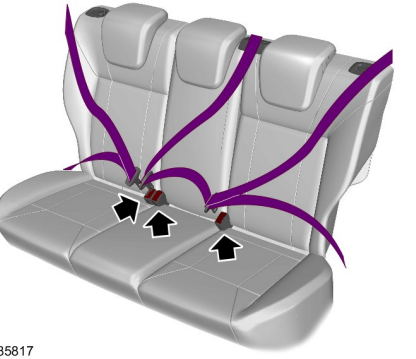

E85817

Pull the belt out steadily. It may lock if you pull it sharply or if your vehicle is on a slope.

Press the red button on the buckle to release the belt. Hold the tongue and let it retract completely and smoothly to its stowed position.

Using Safety Belts During Pregnancy

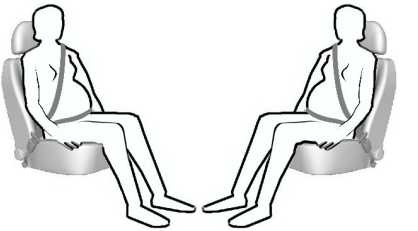

E68587

WARNING

Position the safety belt correctly for your safety and that of your unborn child. Do not use only the lap strap or the shoulder strap.

Fiesta (CCN) Vehicles Built From: 12-01-2015 Vehicles Built Up To: 14-10-2015, CG3582en enGBR, Edition date: 12/2014, First Printing

Pregnant women should always wear their safety belt. The lap belt portion of a combination lap and shoulder belt should be positioned low across the hips below the belly and worn as tight as comfort will allow. The shoulder belt should be positioned to cross the middle of the shoulder and the center of the chest.

SAFETY BELT HEIGHT ADJUSTMENT

WARNING

Position the safety belt height adjusters so that the belt rests across the middle of your shoulder. Failure to adjust the safety belt properly could reduce the effectiveness of the safety belt and increase the risk of injury in a collision.

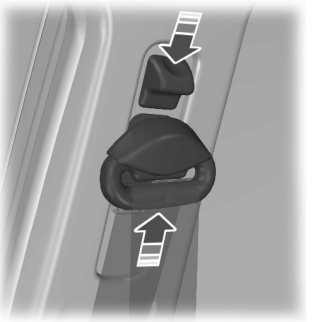

E104440

Adjust the height of the shoulder belt so the belt rests across the middle of your shoulder.

To adjust the shoulder belt height, press the button and slide the height adjuster up or down. Release the button and pull down on the height adjuster to make sure it is locked in place.

SAFETY BELT MINDER

WARNING

The system will only provide protection when you use the safety belt correctly.

The warning lamp illuminates and an audible warning will sound when the following conditions have been met:

- The front safety belts have not been fastened.
- Your vehicle exceeds a relatively low speed.

It will also illuminate and sound if a front safety belt is unfastened when your vehicle is moving.

If you do not fasten your safety belt the warning switches off automatically after approximately five minutes.

Turning the Safety Belt Minder Off

Contact an authorized dealer.

Fiesta (CCN) Vehicles Built From: 12-01-2015 Vehicles Built Up To: 14-10-2015, CG3582en enGBR, Edition date: 12/2014, First Printing

PRINCIPLE OF OPERATION

WARNINGS

Extreme Hazard! Never use a rearward facing child restraint on a seat protected by an active airbag in front of it. Death or serious injury to the child can occur.

Do not modify the front of your vehicle in any way. This could adversely affect deployment of the airbags. Failure to adhere to this warning could result in serious personal injury or death.

Wear a safety belt and keep sufficient distance between yourself and the steering wheel. Only when you use the safety belt correctly, can it hold you in a position that allows the airbag to achieve its optimum effect. See **Sitting in the Correct Position** (page 88). Failure to adhere to this warning could result in serious personal injury or death.

Repairs to the steering wheel, steering column, seats, airbags and safety belts must be carried out by an authorized dealer. Failure to adhere to this warning could result in serious personal injury or death.

Keep the areas in front of the airbags free from obstruction. Do not affix anything to or over the airbag covers. In the event of a crash, hard objects could cause serious personal injury or death.

Do not puncture the seat with sharp objects. This could damage and adversely affect deployment of the airbags. Failure to adhere to this warning could result in serious personal injury or death.

Use seat covers designed for seats with side airbags. Have these fitted by an authorized dealer. Failure to adhere to this warning could result in serious personal injury or death.

Note: *You will hear a loud bang and see a cloud of harmless powdery residue if an airbag deploys. This is normal.*

Note: *Only wipe airbag covers with a damp cloth.*

DRIVER AIRBAG

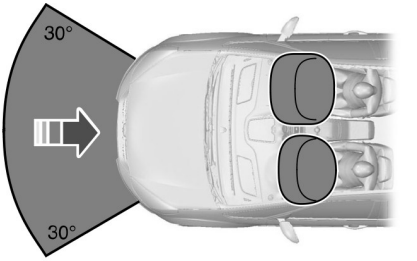

E74302

The airbag will deploy during significant frontal collisions or collisions that are up to 30 degrees from the left or the right. The airbag will inflate within a few thousandths of a second and deflate on contact with the occupant, thus cushioning forward body movement. During minor frontal collisions, overturns, rear collisions and side collisions, the airbag will not deploy.

Fiesta (CCN) Vehicles Built From: 12-01-2015 Vehicles Built Up To: 14-10-2015, CG3582en enGBR, Edition date: 12/2014, First Printing

PASSENGER AIRBAG

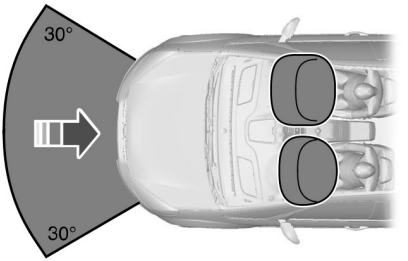

E74302

The airbag will deploy during significant frontal crashes or crashes that are up to 30 degrees from the left or the right. The airbag will inflate within a few thousandths of a second and deflate on contact with the occupant, thus cushioning forward body movement. During minor frontal crashes, overturns, rear crashes and side crashes, the airbag will not deploy.

Switching the Passenger Airbag Off

WARNING

You must switch the airbag off when using a rearward facing child seat on the front seat.

E71313

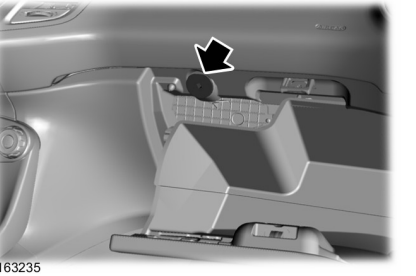

E163235

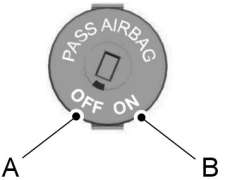

E71312

A	Switch off
B	Switch on

Turn the switch to position A.

When you switch the ignition on, check that the airbag deactivation warning lamp illuminates.

Switching the Passenger Airbag On

WARNING

You must switch the airbag on when you are not using a child seat on the front seat.

Turn the switch to position B.

Fiesta (CCN) Vehicles Built From: 12-01-2015 Vehicles Built Up To: 14-10-2015, CG3582en enGBR, Edition date: 12/2014, First Printing

SIDE AIRBAGS (If Equipped)

WARNING

Use seat covers designed for seats with side airbags. Have these fitted by an authorized dealer.

E72658

The airbags are located inside the seatback of the front seats. There is a label attached to the side of the seatback to indicate this.

The airbag will deploy during significant lateral collisions. The airbag will not deploy in minor lateral and frontal collisions, rear collisions, or overturns.

DRIVER KNEE AIRBAG (If Equipped)

WARNING

Do not attempt to open the airbag cover.

The airbag will deploy during frontal collisions or collisions that are up to 30 degrees from the left or the right. The airbag will inflate within a few thousandths of a second and deflate on contact with the occupants, thus providing a cushion between the driver's knees and the steering column. During overturns, rear collisions and side collisions, the knee airbag will not deploy.

For item location: See **At a Glance** (page 9).

Note: *The airbag has a lower deployment threshold than the front airbags. During a minor collision, it is possible that only the knee airbag will deploy.*

SIDE CURTAIN AIRBAGS (If Equipped)

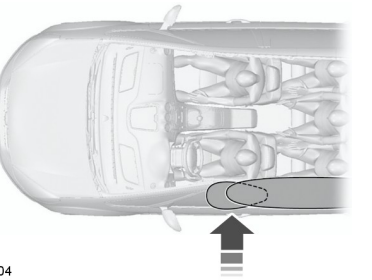

E75004

The airbags are located over the front and rear side windows.

The airbag will deploy during significant lateral collisions. It will also deploy during significant frontal angled collisions. The curtain airbag will not deploy in minor lateral and frontal collisions, rear collisions, or overturns.

Fiesta (CCN) Vehicles Built From: 12-01-2015 Vehicles Built Up To: 14-10-2015, CG3582en enGBR, Edition date: 12/2014, First Printing

GENERAL INFORMATION ON RADIO FREQUENCIES

Note: *Changes or modifications not expressly approved by the party responsible for compliance could void the user's authority to operate the equipment.*

The typical operating range for your transmitter is approximately 33 ft (10 m).

A decrease in operating range could be caused by:

- weather conditions
- nearby radio towers
- structures around your vehicle
- other vehicles parked next to your vehicle.

The radio frequency used by your remote control can also be used by other radio transmitters, for example amateur radios, medical equipment, wireless headphones, wireless remote controls, cell phones, battery chargers and alarm systems. If the frequencies are jammed, you will not be able to use your remote control. You can lock and unlock the doors with the key.

Note: *Make sure your vehicle is locked before leaving it unattended.*

Note: *If you are in range, the remote control will operate if you press any button unintentionally.*

Note: *The remote control contains sensitive electrical components. Exposure to moisture or impact may cause permanent damage.*

REMOTE CONTROL

You can program a maximum of eight remote controls to your vehicle. This includes any that were supplied with your vehicle. The remote controls must remain inside your vehicle during the programming procedure. Fasten the front safety belts and close all doors to make sure that conflicting chimes do not sound during programming.

Programming a New Remote Control

1. Turn the ignition key from position **0** to position **II** four times within six seconds.
2. Turn the ignition to position **0**. A tone sounds to indicate that it is now possible to program a remote control.

Note: *If a tone does not sound, repeat step 1, this time turning the ignition key from position **0** to position **II** 8 times within 10 seconds, ending in position **0**. A tone sounds to indicate that it is now possible to program a remote control.*

3. Press any button on a new remote control within 10 seconds. A tone will sound as confirmation.
4. Repeat step three within 10 seconds for each new remote control. Do not remove the key from the ignition when pressing the button on the remote control.
5. Switch the ignition back on (position **II**) or wait for 10 seconds without programming another remote control to end the key programming. Only the remote controls which you have just programmed are now able to lock and unlock your vehicle.

Fiesta (CCN) Vehicles Built From: 12-01-2015 Vehicles Built Up To: 14-10-2015, CG3582en enGBR, Edition date: 12/2014, First Printing

Reprogramming the Unlocking Function

Note: *When you press the unlock button either all the doors are unlocked or only the driver's door and the liftgate are unlocked. Pressing the unlock button again unlocks all the doors.*

Press and hold the unlock and lock buttons on the remote control simultaneously for at least four seconds with the ignition off. The direction indicators will flash twice to confirm the change.

To return to the original unlocking function, repeat the process.

Changing the Remote Control Battery

Make sure that you dispose of old batteries in an environmentally friendly way. Seek advice from your local authority regarding recycling.

Remote Control With a Folding Key Blade

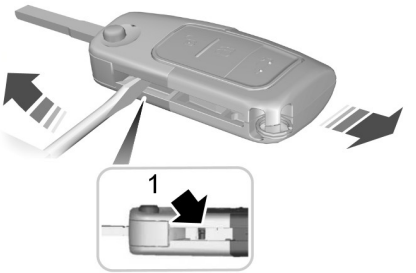

E74383

1. Insert a screwdriver as far as possible into the slot on the side of the remote control, push it toward the key blade and remove the key blade.

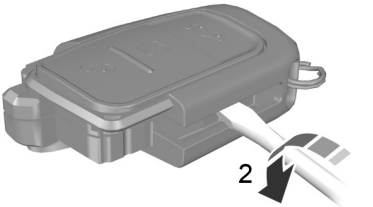

E74384

2. Twist the screwdriver in the position shown to start separating the two halves of the remote control.

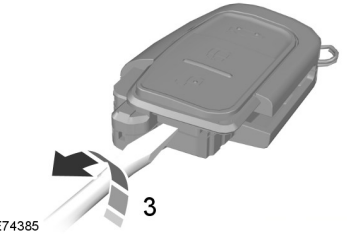

E74385

3. Twist the screwdriver in the position shown to separate the two halves of the remote control.

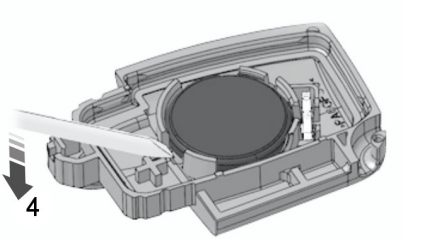

E126280

Note: *Do not touch the battery contacts or the printed circuit board with the screwdriver.*

Fiesta (CCN) Vehicles Built From: 12-01-2015 Vehicles Built Up To: 14-10-2015, CG3582en enGBR, Edition date: 12/2014, First Printing

4. Carefully remove the battery with the screwdriver.
5. Install a new battery (3V CR 2032) with the + facing downwards.
6. Assemble the two halves of the remote control.
7. Install the key blade.

Remote Control Without a Folding Key Blade

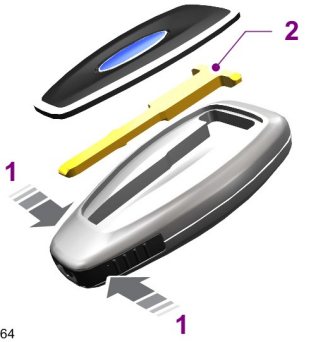

E87964

1. Press and hold the buttons on the edges to release the cover. Carefully remove the cover.
2. Remove the key blade.

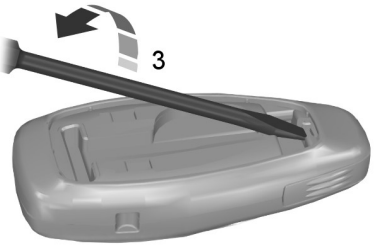

E105362

3. Twist the screwdriver in the position shown to start separating the two halves of the remote control.

E119190

4. Twist the screwdriver in the position shown to separate the two halves of the remote control.

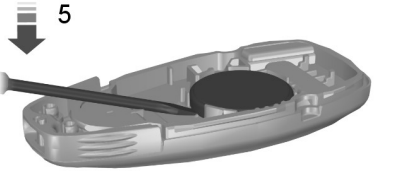

E125860

Note: *Do not touch the battery contacts or the printed circuit board with the screwdriver.*

5. Carefully remove the battery with the screwdriver.
6. Install a new battery (3V CR 2032) with the + facing downwards.
7. Assemble the two halves of the remote control.
8. Install the key blade.

Fiesta (CCN) Vehicles Built From: 12-01-2015 Vehicles Built Up To: 14-10-2015, CG3582en enGBR, Edition date: 12/2014, First Printing

REPLACING A LOST KEY OR REMOTE CONTROL

Replacement or additional keys or remote controls can be purchased from an authorized dealer. Your dealer can program the remote controls for your vehicle or you may be able to program them yourself. See **Remote Control** (page 27).

To re-program the passive anti-theft system see an authorized dealer.

Fiesta (CCN) Vehicles Built From: 12-01-2015 Vehicles Built Up To: 14-10-2015, CG3582en enGBR, Edition date: 12/2014, First Printing

PRINCIPLE OF OPERATION

The system allows you to program keys with restricted driving modes to promote good driving habits. You can use all but one of the keys programmed to your vehicle with these restricted modes.

Any keys that have not been programmed are referred to as an administrator key or admin key. These can be used to:

- create a MyKey
- program optional MyKey settings
- clear all MyKey features.

When you have programmed a MyKey, you can access the following information using the information display:

- How many admin keys and MyKeys are programmed to your vehicle.
- The total distance your vehicle has traveled using a MyKey.

Note: *Switch the ignition on to use the system.*

Note: *All MyKeys are programmed to the same settings. You cannot program them individually.*

Standard Settings

The following settings cannot be changed:

- Safety belt minder. You cannot disable this feature. The audio system will mute when this feature is activated.
- Low fuel level warning. When the fuel level is low, warnings will be shown in the display followed by an audible tone.
- Driver assist features, for example navigation and parking aids. These systems turn on automatically whenever you switch the ignition on.

Optional Settings

You can configure MyKey settings when you first create a MyKey. You can also change the settings afterward with an admin key.

The following settings can be configured using an admin key:

- Various vehicle speed limits can be set. Warnings will be shown in the display followed by an audible tone when your vehicle reaches the set speed. You cannot override the set speed by fully depressing the accelerator pedal.
- Various vehicle speed reminders can be set. Warnings will be shown in the display followed by an audible tone when the set vehicle speed is exceeded.
- Audio system maximum volume of 45%. A message will be shown in the display when you attempt to exceed the limited volume. Automatic volume control will be disabled.
- Always on setting. When this is selected you will not be able to disable emergency assistance or the do not disturb feature.

Vehicles with Keyless Entry

If a MyKey and an admin key are present, your vehicle will recognize the admin key only.

CREATING A MYKEY

Vehicles without Keyless Starting

1. Insert the key you want to program into the ignition.
2. Switch the ignition on.
3. Access the main menu using the information display. Select **MyKey** and press **OK** or the right arrow button.

Fiesta (CCN) Vehicles Built From: 12-01-2015 Vehicles Built Up To: 14-10-2015, CG3582en enGBR, Edition date: 12/2014, First Printing

4. Select **Create MyKey** and press **OK**.
5. When prompted, press and hold **OK** until you see a message informing you to label this key as a MyKey. The key will be restricted the next time you use it.

Note: *Make sure you label the MyKey so you can distinguish it from the admin keys.*

Vehicles with Keyless Starting

1. Switch the ignition on using an admin key.
2. Access the main menu using the information display. Select **MyKey** and press **OK** or the right arrow button.

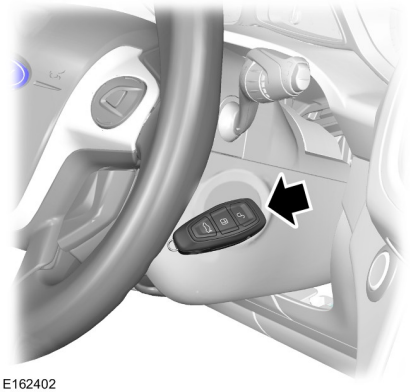

E162402

3. Hold the key you want to program next to the steering column exactly as shown.
4. Select **Create MyKey** and press **OK**.
5. When prompted, press and hold **OK** until you see a message informing you to label this key as a MyKey. The key will be restricted the next time you use it.

Note: *Make sure you label the MyKey so you can distinguish it from the admin keys.*

PROGRAMMING A MYKEY

Optional Settings

1. Switch the ignition on using an admin key.
2. Access the main menu using the information display. Select **MyKey** and press **OK** or the right arrow button.
3. Use the arrow buttons to scroll to an optional feature.
4. Press **OK** or the right arrow button to scroll through the settings.
5. Press **OK** or the right arrow button to make a selection.

CLEARING ALL MYKEYS

Note: *Clearing all MyKeys will return the admin key to its default setting and reset the Mykey distance to zero.*

1. Switch the ignition on using an admin key.
2. Access the main menu using the information display. Select **MyKey** and press **OK** or the right arrow button.
3. Scroll to **Clear All** and press **OK**.
4. Press and hold **OK** until you see a message informing you that all MyKeys have been cleared.

CHECKING MYKEY SYSTEM STATUS

You can find information about your programmed MyKeys by using the information display.

Fiesta (CCN) Vehicles Built From: 12-01-2015 Vehicles Built Up To: 14-10-2015, CG3582en enGBR, Edition date: 12/2014, First Printing

MyKey Distance

Tracks the distance when drivers use a MyKey. The only way to delete the accumulated distance is by using an admin key to clear all MyKeys. If the distance does not accumulate as expected, then the intended user is not using the MyKey, or an admin key user recently cleared and then recreated a MyKey.

Number of MyKeys

Indicates the number of MyKeys programmed to your vehicle. Use this feature to detect how many MyKeys you have for your vehicle and determine when all MyKeys have been deleted.

Number of Admin Keys

Indicates how many admin keys are programmed to your vehicle. Use this feature to determine how many admin keys you have for your vehicle, and detect if an additional MyKey has been programmed.

USING MYKEY WITH REMOTE START SYSTEMS

MyKey is not compatible with non Ford-approved, aftermarket remote start systems. If you choose to install a remote start system, see an authorized dealer for a Ford-approved remote start system.

MYKEY TROUBLESHOOTING

All Vehicles

Condition	Potential Causes
I cannot create a MyKey.	The key used to start the vehicle is not an admin key. The key used to start the vehicle is the only key. There always has to be at least one admin key.
I cannot program the configurable settings.	The key used to start the vehicle is not an admin key. There are no MyKeys programmed to your vehicle. See **Creating a MyKey** (page 31).
I cannot clear the MyKeys.	The key used to start the vehicle is not an admin key. There are no MyKeys programmed to your vehicle. See **Creating a MyKey** (page 31).
I lost the only admin key.	Purchase a new key from an authorized dealer.
I lost a key.	Program a spare key. See **Passive Anti-Theft System** (page 40).
The MyKey distance does not accumulate.	The MyKey is not being used by the intended user. The MyKeys have been cleared. See **Clearing All MyKeys** (page 32).

Fiesta (CCN) Vehicles Built From: 12-01-2015 Vehicles Built Up To: 14-10-2015, CG3582en enGBR, Edition date: 12/2014, First Printing

Vehicles With Push Button Start

Condition	Potential Causes
I cannot create a MyKey.	The key is not in the backup position. See **Creating a MyKey** (page 31).
There are no MyKey driving modes.	An admin key is present when you switch the ignition on. There are no MyKeys programmed to your vehicle. See **Creating a MyKey** (page 31).

Fiesta (CCN) Vehicles Built From: 12-01-2015 Vehicles Built Up To: 14-10-2015, CG3582en enGBR, Edition date: 12/2014, First Printing

LOCKING AND UNLOCKING

Remote Control

The remote control can be used any time your vehicle is not running.

Unlocking the Doors

Note: *You can unlock the driver door with the key. Use the key when the remote control is not functioning.*

Note: *When you lock your vehicle for several weeks, the remote control will be switched off. Your vehicle must be unlocked and the engine started using the key. Unlocking and starting your vehicle once will enable the remote control.*

One-Stage Unlocking

Note: *This is the default setting with your remote control.*

Press the button to unlock all the doors.

The direction indicators will flash.

Two-Stage Unlocking

Press the button to unlock the driver door.

Press the button again within three seconds to unlock all doors.

The direction indicators will flash.

Reprogramming the Unlocking Function

You can reprogram the unlocking function using the remote control so that only the driver door is unlocked. This will enable two-stage unlocking. See **Remote Control** (page 27).

Locking the Doors

Press the button to lock all the doors. The direction indicators will flash twice.

Press the button again within three seconds to confirm that all the doors are closed. The doors will lock again, and the direction indicators will flash twice if all the doors and the luggage compartment are closed.

Note: *If any door or the luggage compartment is not closed, or if the hood is not closed on vehicles that have an anti-theft alarm or remote start, the direction indicators will not flash.*

Double Locking

WARNING

Do not use double locking when passengers or animals are inside your vehicle. You will not be able to unlock the doors from the inside if you have double locked them.

Double locking is a theft protection feature that prevents someone from opening the doors from the inside. You can only double lock the doors if the front doors are both closed.

Press the button twice within three seconds.

Automatic Re-locking

The doors will relock automatically if you do not open a door within 45 seconds of unlocking the doors with the remote control. The door locks and the alarm will return to their previous state.

Fiesta (CCN) Vehicles Built From: 12-01-2015 Vehicles Built Up To: 14-10-2015, CG3582en enGBR, Edition date: 12/2014, First Printing

Locking and Unlocking the Doors From Inside

Press the button to lock and unlock all the doors. For item location: See **At a Glance** (page 9). The lamp illuminates with the doors locked.

Locking and Unlocking the Doors with the Key

Note: *Do not leave your keys in your vehicle.*

Locking with the Key

Turn the top of the key toward the front of your vehicle.

Double Locking with the Key

Turn the key to the lock position twice within three seconds.

Unlocking with the Key

Turn the top of the key toward the rear of your vehicle.

Unlocking the Doors with the Interior Door Handles

You can unlock individual doors by pulling the relevant interior door handle. Pulling the driver interior door handle will unlock all the doors.

Emergency Locking with the Key

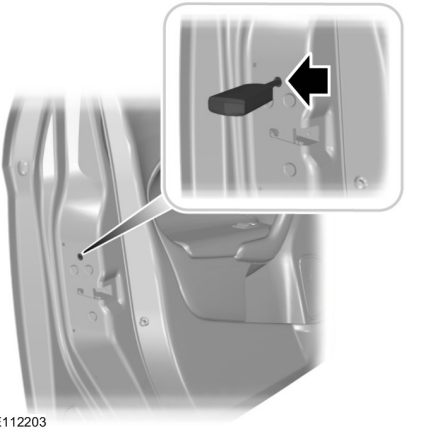

E112203

Left-Hand Side

Turn clockwise to lock.

Right-Hand Side

Turn counterclockwise to lock.

Note: *If the child safety locks are on and you pull the interior handle, you will only turn off the emergency locking, not the child safety lock. You can only open the doors using the external door handle.*

Note: *If the doors have been unlocked using this method, the doors must be locked individually until the central locking function has been repaired.*

Note: *When the central locking function fails to operate, lock the doors individually using the key in the position shown.*

Fiesta (CCN) Vehicles Built From: 12-01-2015 Vehicles Built Up To: 14-10-2015, CG3582en enGBR, Edition date: 12/2014, First Printing

MANUAL LIFTGATE

WARNINGS

It is extremely dangerous to ride in a cargo area, inside or outside of your vehicle. In a crash, people riding in these areas are more likely to be seriously injured or killed. Do not allow people to ride in any area of your vehicle that is not equipped with seats and safety belts. Make sure everyone in your vehicle is in a seat and properly using a safety belt. Failure to follow this warning could result in serious personal injury or death.

Make sure to close and latch the liftgate to prevent drawing exhaust fumes into your vehicle. This will also prevent passengers and cargo from falling out. If you must drive with the liftgate open, keep the vents or windows open so outside air comes into your vehicle. Failure to follow this warning could result in serious personal injury.

Note: *Be careful when opening or closing the liftgate in a garage or other enclosed area to avoid damaging the liftgate.*

Note: *Do not hang anything, for example a bike rack, from the glass or liftgate. This could damage the liftgate and its components.*

Note: *Do not leave the liftgate open when driving. This could damage the liftgate and its components.*

Opening and Closing the Liftgate

To Open the Liftgate

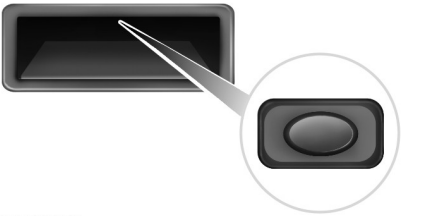

E138632

Press the button located in the top of the liftgate pull cup handle to unlatch the liftgate, then pull on the outside handle.

Opening With the Remote Control

Press the button twice within three seconds.

To Close the Liftgate

E89132

A recessed grip is located inside the liftgate to help with closing.

Fiesta (CCN) Vehicles Built From: 12-01-2015 Vehicles Built Up To: 14-10-2015, CG3582en enGBR, Edition date: 12/2014, First Printing

KEYLESS ENTRY

General Information

WARNING

The system may not function if the key is close to metal objects or electronic devices such as cell phones.

The system will not function if:

- Your vehicle battery has no charge.
- The passive key frequencies are jammed.
- The passive key battery is flat.

Note: *If the system does not function, you will need to use the key blade to lock and unlock your vehicle.*

The system allows you to operate your vehicle without the use of a key or remote control.

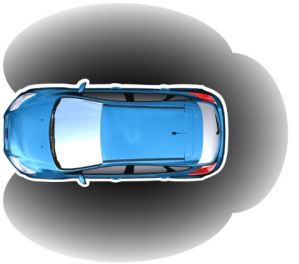

E78276

Passive locking and unlocking requires a valid passive key to be located within one of the three external detection ranges. These are located approximately five feet (one and a half meters) from the front door handles and the liftgate.

Passive Key

Your vehicle can be locked and unlocked with the passive key. You can use the passive key as a remote control. See **Locking and Unlocking** (page 35).

Locking Your Vehicle

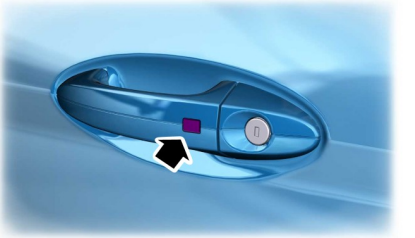

E87384

WARNING

Your vehicle does not lock itself automatically. If you do not press a locking button your vehicle will remain unlocked.

Locking buttons are located on each of the front doors.

For central locking and to arm the alarm, press a locking button once.

For double locking and to arm the alarm, press a locking button twice within three seconds.

Note: *Your vehicle will remain locked for approximately three seconds. When the delay period is over, you can open the doors again, provided the passive key is within the respective detection range.*

Two short flashes of the direction indicators confirms that all the doors and the liftgate have been locked and that the alarm has been armed.

Fiesta (CCN) Vehicles Built From: 12-01-2015 Vehicles Built Up To: 14-10-2015, CG3582en enGBR, Edition date: 12/2014, First Printing

Liftgate

Note: *The liftgate cannot be closed and will pop back up if the passive key is located inside the luggage compartment with the doors locked.*

Note: *If a second valid passive key is located within the liftgate detection range, the liftgate can be closed.*

Unlocking Your Vehicle

Note: *When your vehicle remains locked for longer than three days, the system will enter an energy-saving mode. This is to prevent your vehicle battery running out of charge. When your vehicle is unlocked while in this mode, the reaction time of the system may be a little longer than normal. To exit the energy-saving mode, unlock your vehicle.*

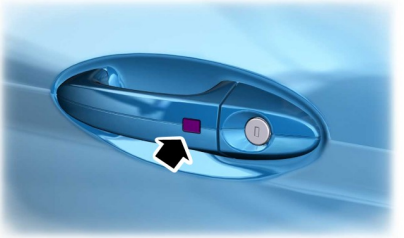

E87384

Press a locking button once.

Note: *A valid passive key must be located within the detection range of that door.*

One long flash of the direction indicators confirms that all the doors and the liftgate have been unlocked and that the alarm has been disarmed.

Unlocking Only the Driver's Door

If the unlocking function is reprogrammed so that only the driver's door and the liftgate are unlocked. See **Remote Control** (page 27). Note the following:

If the driver's door is the first door which is opened, the other doors will remain locked. All the other doors can be unlocked from inside your vehicle by pressing the unlock button on the instrument panel. For item location: See **At a Glance** (page 9).

Disabled Keys

Any keys left inside your vehicle interior when it is locked will be disabled.

You cannot use a disabled key to switch the ignition on or start the engine.

You must enable all passive keys again in order to use them.

To enable all your passive keys, unlock your vehicle using a passive key or the remote control unlocking function.

All passive keys will then be enabled if you switch the ignition on or you start your vehicle with a valid key.

Locking and Unlocking the Doors With the Key Blade

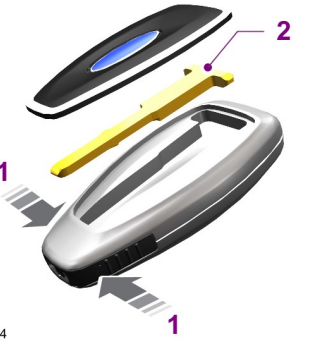

E87964

1. Carefully remove the cover.
2. Remove the key blade and insert it into the lock.

Note: *Only the driver's door handle has a lock cylinder.*

Fiesta (CCN) Vehicles Built From: 12-01-2015 Vehicles Built Up To: 14-10-2015, CG3582en enGBR, Edition date: 12/2014, First Printing

PASSIVE ANTI-THEFT SYSTEM

Principle of Operation

The system prevents someone from starting the engine with an incorrectly coded key.

Coded Keys

If you lose a key, you can obtain a replacement from an authorized dealer. If possible, provide them with the key number from the tag provided with the original keys. You can also obtain extra keys from an authorized dealer.

Note: *Have all of your remaining keys erased and recoded if you lose a key. Have replacement keys coded together with recoding your remaining keys. See an authorized dealer for further information.*

Note: *Do not shield your keys with metal objects. This may prevent the receiver from recognizing a coded key.*

Arming the Engine Immobilizer

After you switch the ignition off the engine immobilizer will arm automatically after a short time.

Disarming the Engine Immobilizer

When you switch the ignition on the engine immobilizer will disarm automatically if a correctly coded key is used.

If you are unable to start the engine and the message **Key not detected** is shown in the display, the key has not been recognized. Remove the key and try again.

If you are unable to start the engine with a correctly coded key, and the message **Immobiliser malfunction Service now** is shown in the display, this indicates a malfunction. Have your vehicle checked by an authorized dealer immediately.

ANTI-THEFT ALARM

Alarm System

Your vehicle may have one of the following alarm systems:

- Perimeter alarm.
- Perimeter alarm with interior sensors.
- Category one alarm with interior sensors and battery back-up sounder.

Perimeter Alarm

The perimeter alarm is a deterrent against unauthorized access to your vehicle through the doors and the hood. It also protects the audio unit.

Interior Sensors

E71401

WARNINGS

Do not cover up the interior lamp unit sensors.

Do not arm the alarm with full guard if passengers, animals or other moving objects are inside your vehicle.

The sensors act as a deterrent against unauthorized intrusion by sensing any movement within your vehicle.

Fiesta (CCN) Vehicles Built From: 12-01-2015 Vehicles Built Up To: 14-10-2015, CG3582en enGBR, Edition date: 12/2014, First Printing

Battery Back-up Sounder

The battery back-up sounder is an extra alarm system which will sound a siren when the alarm is triggered. When you lock your vehicle the system is armed. The sounder has its own battery and will sound an alarm siren even if someone disconnects your vehicle battery or the battery back-up sounder itself.

Triggering the Alarm

Once armed, the alarm is triggered in any of the following ways:

- If someone opens a door, the liftgate or the hood without a valid key or remote control.
- If someone removes the audio or navigation system.
- If you switch the ignition on without a valid key.
- If the interior sensors detect movement within your vehicle.
- On vehicles with a battery back-up sounder, if someone disconnects your vehicle battery or the battery back-up sounder itself.

If the alarm is triggered, the alarm horn will sound for 30 seconds and the hazard warning flasher will flash for five minutes.

Any further attempts to perform one of the above will trigger the alarm again.

Full and Reduced Guard

Full Guard

Full guard is the standard setting.

In full guard, the interior sensors are on when you arm the alarm.

Note: *This may result in false alarms if animals or moving objects are inside your vehicle.*

Reduced Guard

In reduced guard, the interior sensors are off when you arm the alarm.

Note: *You can set the alarm to reduced guard for the current ignition cycle only. The alarm will reset to full guard the next time you switch the ignition on.*

Ask on Exit (If Equipped)

You can set the information display to ask you each time which level of guard you wish to set.

If you select **Ask on Exit**, the message **Reduced guard?** appears in the information display each time you switch the ignition off. See **Information Messages** (page 71).

If you wish to arm the alarm with reduced guard, press the **OK** button when this message appears.

If you wish to arm the alarm with full guard, leave your vehicle without pressing the **OK** button.

Selecting Full or Reduced Guard

Note: *Selecting **Reduced** does not set the alarm permanently to reduced guard. It sets it to reduced guard only for the current ignition cycle. If you regularly set the alarm to reduced guard, select **Ask on Exit**.*

You can select full or reduced guard using the information display. See **Information Messages** (page 71).

Arming the Alarm

To arm the alarm, lock your vehicle. See **Locks** (page 35).

Fiesta (CCN) Vehicles Built From: 12-01-2015 Vehicles Built Up To: 14-10-2015, CG3582en enGBR, Edition date: 12/2014, First Printing

Disarming the Alarm

Vehicles Without Keyless Entry

Perimeter Alarm

Disarm and silence the alarm by unlocking the doors with the key and switching the ignition on with a correctly coded key or unlocking the doors with the remote control.

Category One Alarm

Disarm and silence the alarm by unlocking the doors with the key and switching the ignition on with a correctly coded key within 12 seconds or unlocking the doors with the remote control.

Vehicles with Keyless Entry

Note: *A valid passive key must be located within the detection range of that door for keyless entry. See* ***Keyless Entry*** *(page 38).*

Perimeter Alarm

Disarm and silence the alarm by unlocking the doors and switching the ignition on or unlocking the doors with the remote control.

Category One Alarm

Disarm and silence the alarm by unlocking the doors and switching the ignition on within 12 seconds or unlocking the doors or the liftgate with the remote control.

Fiesta (CCN) Vehicles Built From: 12-01-2015 Vehicles Built Up To: 14-10-2015, CG3582en enGBR, Edition date: 12/2014, First Printing

ADJUSTING THE STEERING WHEEL

WARNING

Do not adjust the steering wheel when your vehicle is moving.

Note: *Make sure that you are sitting in the correct position. See* ***Sitting in the Correct Position*** *(page 88).*

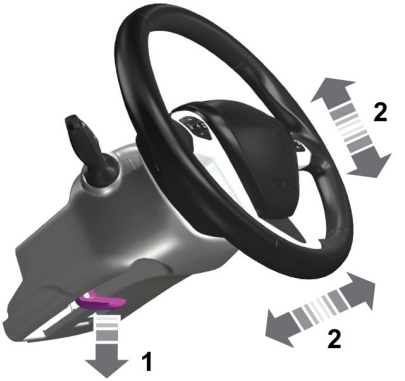

E95178

1. Unlock the steering column.
2. Adjust the steering wheel to the desired position.

E95179

3. Lock the steering column.

AUDIO CONTROL (If Equipped)

Select the required source on the audio unit.

You can operate the following functions with the control:

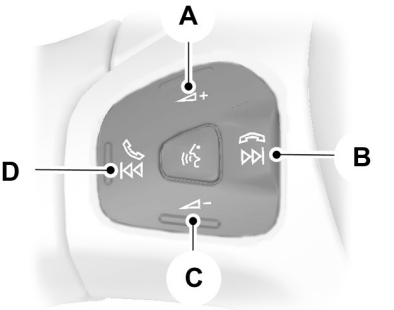

E141530

A	Volume up
B	Seek up, next or end call

Fiesta (CCN) Vehicles Built From: 12-01-2015 Vehicles Built Up To: 14-10-2015, CG3582en enGBR, Edition date: 12/2014, First Printing

C Volume down

D Seek down, previous or accept call

Seek, Next or Previous

Press the seek button to:

- tune the radio to the next or previous stored preset
- play the next or the previous track.

Press and hold the seek button to:

- tune the radio to the next station up or down the frequency band
- seek through a track.

VOICE CONTROL (If Equipped)

E141533

Press the button to select or deselect voice control. See **SYNC™** (page 237).

CRUISE CONTROL (If Equipped)

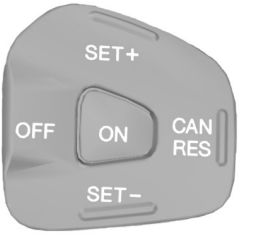

E141961

See **Cruise Control** (page 124).

Fiesta (CCN) Vehicles Built From: 12-01-2015 Vehicles Built Up To: 14-10-2015, CG3582en enGBR, Edition date: 12/2014, First Printing

WINDSHIELD WIPERS

Note: *Fully defrost the windshield before you switch the windshield wipers on.*

Note: *Make sure you switch the windshield wipers off before entering a car wash.*

Note: *If you use a car wash with a waxing cycle, make sure that you remove the wax from the windshield and the wiper blades.*

Note: *If streaks or smears appear on the windshield, clean the windshield and the wiper blades. See* ***Checking the Wiper Blades*** *(page 162).*

If that does not resolve the issue, install new wiper blades. See ***Changing the Wiper Blades*** *(page 162).*
Note: *Do not operate the wipers on a dry windshield. This may scratch the glass, damage the wiper blades or cause the wiper motor to burn out. Always use the windshield washers before wiping a dry windshield.*

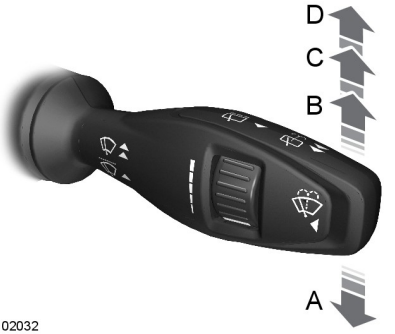

E102032

A	Single wipe
B	Intermittent wipe
C	Normal wipe
D	High speed wipe

Note: *If you press and hold the wiper lever in position A, the wipers will continue to wipe until you release the wiper lever.*

Intermittent Wipe

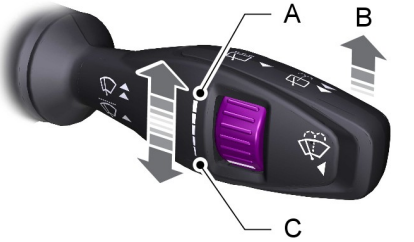

E102033

A	Short wipe interval
B	Intermittent wipe
C	Long wipe interval

Use the rotary control to adjust the intermittent wipe interval.

Speed Dependent Wipers

When your vehicle speed increases, the interval between wipes decreases.

AUTOWIPERS (If Equipped)

Note: *Fully defrost the windshield before switching on the windshield wipers.*

Note: *Make sure the windshield wipers are switched off before entering a car wash.*

Note: *Clean the windshield and wiper blades if they begin to leave streaks or smears. If that does not resolve the issue, install new wiper blades.*

Note: *If you switch autolamps on in conjunction with autowipers, low beam headlamps will illuminate automatically when the rain sensor activates the windshield wipers continuously.*

Fiesta (CCN) Vehicles Built From: 12-01-2015 Vehicles Built Up To: 14-10-2015, CG3582en enGBR, Edition date: 12/2014, First Printing

Wet or winter driving conditions with ice, snow or salty road mist can cause inconsistent and unexpected wiping or smearing.

In these conditions, you can do the following to help keep your windshield clear:

- Lower the sensitivity of the autowipers.
- Change the wiper speed to normal or high speed wipe as necessary.
- Switch the autowipers off.

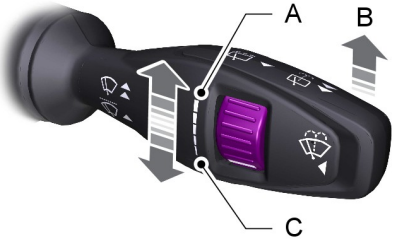

E102033

A	Maximum autowipe
B	On
C	Minimum autowipe

The wipers will function when water is detected on the windshield. The rain sensor will continue to monitor the amount of water on the windshield and adjust the speed of the wipers automatically. This feature can be switched on or off in the information display. See (page 66).

Note: *When you switch this feature off, the wipers will return to the variable intermittent setting based on the sensitivity you have set.*

Use the rotary control to adjust the sensitivity of the rain sensor. On minimum autowipe, the wipers will operate when the sensor detects a large amount of water on the windshield. On maximum autowipe, the wipers will operate when the sensor detects a small amount of water on the windshield.

Keep the outside of the windshield clean. Sensor performance will be affected if the area around the interior mirror is dirty. The rain sensor is very sensitive and the wipers may operate if dirt, mist or flies hit the windshield.

WINDSHIELD WASHERS

Note: *Do not operate the washers when the washer reservoir is empty. This may cause the washer pump to overheat.*

E102051

Push the button to operate the washers. When you release the button, the wipers will operate for a short time.

Fiesta (CCN) Vehicles Built From: 12-01-2015 Vehicles Built Up To: 14-10-2015, CG3582en enGBR, Edition date: 12/2014, First Printing

REAR WINDOW WIPER AND WASHERS

Intermittent Wipe

E102052

Pull the lever toward you.

Reverse Gear Wipe

The rear wiper will turn on automatically when selecting reverse gear if:

- the rear wiper is not already switched on
- the wiper lever is in position A, B, C or D
- the front wiper is operating (when set to position B).

Rear Window Washer

Note: *Do not operate the washers when the washer reservoir is empty. This may cause the washer pump to overheat.*

E102053

Pull the lever toward you to operate the washers. They will operate for a maximum of 10 seconds. When you release the lever, the wiper will operate for a short time.

Fiesta (CCN) Vehicles Built From: 12-01-2015 Vehicles Built Up To: 14-10-2015, CG3582en enGBR, Edition date: 12/2014, First Printing

GENERAL INFORMATION

Condensation in Lamp Assemblies

Exterior lamps have vents to accommodate normal changes in air pressure.

Condensation can be a natural by-product of this design. When moist air enters the lamp assembly through the vents, there is a possibility that condensation can occur when the temperature is cold. When normal condensation occurs, a fine mist can form on the interior of the lens. The fine mist eventually clears and exits through the vents during normal operation.

Clearing time may take as long as 48 hours under dry weather conditions.

Examples of acceptable condensation are:

- The presence of a fine mist (no streaks, drip marks or large droplets).
- A fine mist covers less than 50% of the lens.

Examples of unacceptable condensation are:

- A water puddle inside the lamp.
- Streaks, drip marks or large droplets present on the interior of the lens.

If you see any unacceptable condensation, have your vehicle checked by an authorized dealer.

LIGHTING CONTROL

Lighting Control Positions

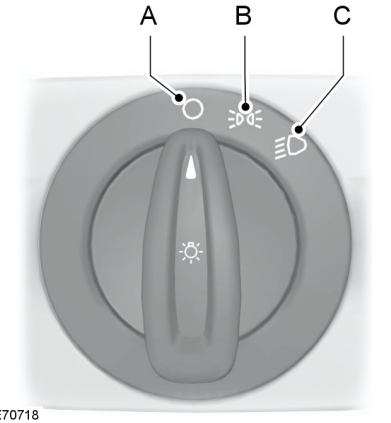

E70718

A	Off
B	Parking lamps, instrument panel lamps, license plate lamps and tail lamps
C	Headlamps

Parking Lamps

Note: *Prolonged use of the parking lamps when the ignition is off will cause the battery to run out of charge.*

To operate the parking lamps turn the lighting control to position B. The parking lamps operate with the ignition on or off.

Fiesta (CCN) Vehicles Built From: 12-01-2015 Vehicles Built Up To: 14-10-2015, CG3582en enGBR, Edition date: 12/2014, First Printing

High Beams

E101829

Pull the lever fully toward you to switch the high beams on.

Pull the lever fully toward you again to switch the high beams off.

Headlamp Flasher

Pull the lever toward you slightly and release it to flash the headlamps.

AUTOLAMPS (If Equipped)

E70719

The headlamps will switch on and off automatically in low light situations or during poor weather.

Note: *It may be necessary to switch your headlamps on manually in severe weather conditions.*

Note: *If you have autolamps on, you can only switch the high beam on once autolamps has switched the headlamps on.*

Note: *If you switch autolamps on in conjunction with autowipers, low beam headlamps will illuminate automatically when the rain sensor activates the windshield wipers continuously.*

INSTRUMENT LIGHTING DIMMER

E148739

HEADLAMP EXIT DELAY

After you switch the ignition off, you can switch the headlamps on by pulling the direction indicator lever toward you. You will hear a short tone. The headlamps will switch off automatically after three minutes with any door open or 30 seconds after the last door has been closed. You can cancel this feature by pulling the direction indicator toward you again or switching the ignition on.

Fiesta (CCN) Vehicles Built From: 12-01-2015 Vehicles Built Up To: 14-10-2015, CG3582en enGBR, Edition date: 12/2014, First Printing

DAYTIME RUNNING LAMPS (If Equipped)

WARNING

Always remember to switch your headlamps on in low light situations or during inclement weather. The system does not turn on the tail lamps and may not provide adequate lighting during these conditions. Failure to switch the headlamps on under these conditions may result in a collision.

The system switches the headlamps on in low light situations.

To switch the system on:

1. Switch the ignition on.
2. Turn the lighting control to the off, autolamp or parking lamp position.
3. Make sure the transmission selector lever is not in position **P**.

FRONT FOG LAMPS (If Equipped)

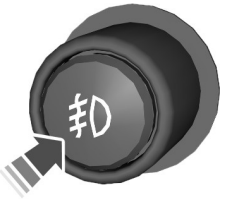

E70721

Press the control to switch the fog lamps on or off.

You can switch the fog lamps on when the lighting control is in any position except off.

REAR FOG LAMPS

E70720

WARNINGS

Only use the rear fog lamps when visibility is restricted to less than 164 feet (50 meters).

Do not use the rear fog lamps when it is raining or snowing and visibility is more than 164 feet (50 meters).

Press the control to switch the fog lamps on or off.

You can switch the fog lamps on when either the front fog lamps or low beam headlamps are on.

HEADLAMP LEVELING

Note: *Vehicles with Xenon headlamps have automatic headlamp leveling.*

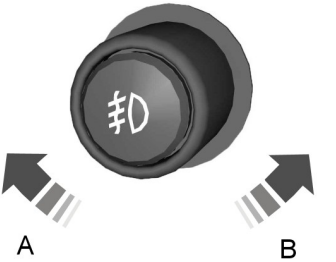

E70722

A	Raised headlamp beams
B	Lowered headlamp beams

Fiesta (CCN) Vehicles Built From: 12-01-2015 Vehicles Built Up To: 14-10-2015, CG3582en enGBR, Edition date: 12/2014, First Printing

You can adjust the level of the headlamp beams according to your vehicle load.

Recommended Headlamp Leveling Switch Positions

Load		Load in luggage compartment*	Switch position
Front seats	Second row seats		
1-2	-	-	0
1-2	3	-	2
1-2	3	Max	2.5
1-2**	-	Max	3.5**
1	-	Max	4

* See **Vehicle Identification Plate** (page 199).

** Van only

DIRECTION INDICATORS

E102016

Push the lever up or down to use the direction indicators.

Note: *Tap the lever up or down to make the direction indicators flash three times to indicate a lane change.*

INTERIOR LAMPS

Courtesy Lamp

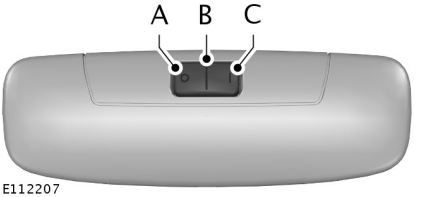

E112207

A Off

B Door contact

C On

Fiesta (CCN) Vehicles Built From: 12-01-2015 Vehicles Built Up To: 14-10-2015, CG3582en enGBR, Edition date: 12/2014, First Printing

If you set the switch to position B, the courtesy lamp will illuminate when you unlock or open a door or the liftgate. If you leave a door open with the ignition switched off, the courtesy lamp will go off automatically after some time to prevent your vehicle battery from losing charge. To switch it back on, switch the ignition on for a short time.

The courtesy lamp will also illuminate when you switch the ignition off. It will go off automatically after a short time or when you start the engine.

If you set the switch to position C with the ignition switched off, the courtesy lamp will illuminate. It will go off automatically after a short time to prevent your vehicle battery from losing charge. To switch it back on, switch the ignition on for a short time.

Reading Lamps (If Equipped)

E112208

If you switch the ignition off, the reading lamps will go off automatically after some time to prevent your vehicle battery from discharging. To switch them back on, switch the ignition on for a short time.

Fiesta (CCN) Vehicles Built From: 12-01-2015 Vehicles Built Up To: 14-10-2015, CG3582en enGBR, Edition date: 12/2014, First Printing

POWER WINDOWS (If Equipped)

WARNINGS

Do not leave children unattended in your vehicle and do not let them play with the power windows. They may seriously injure themselves.

When closing the power windows, you should verify they are free of obstructions and make sure that children and pets are not in the proximity of the window openings.

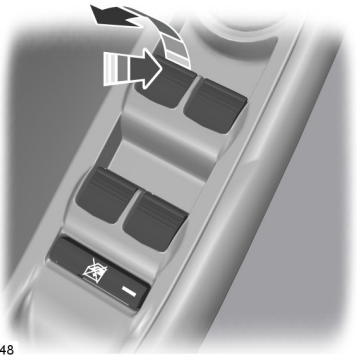

E70848

Press the control to open the window.

Lift the control to close the window.

Note: *You may hear a pulsing noise when just one of the windows is open. Lower the opposite window slightly to reduce this noise.*

One-Touch Down (If Equipped)

Press the control fully and release it. Press again or lift it to stop the window.

One-Touch Up (If Equipped)

Lift the control fully and release it. Press or lift it again to stop the window.

Window Lock

E70850

Press the control to lock or unlock the rear window controls. It lights when the rear window controls lock.

Bounce-Back (If Equipped)

The window stops automatically while closing. It reverses some distance if there is an obstacle in the way.

Overriding the Bounce-Back Feature

WARNING

When you override the bounce-back feature the window will not reverse if it detects an obstacle. Take care when closing the windows to avoid personal injury or damage to your vehicle.

Proceed as follows to override this protection feature when there is a resistance, for example in winter:

1. Close the window twice until it reaches the point of resistance and let it reverse.

Fiesta (CCN) Vehicles Built From: 12-01-2015 Vehicles Built Up To: 14-10-2015, CG3582en enGBR, Edition date: 12/2014, First Printing

2. Close the window a third time to the point of resistance. You disabled the bounce-back feature and you can now close the window manually. The window travels past the point of resistance and you can close it fully.

Contact an authorized dealer as soon as possible if the window does not close after the third attempt.

Resetting the Bounce-Back Feature

WARNING

The bounce-back feature remains turned off until you reset the memory.

If you have disconnected the battery, you must reset the bounce-back memory separately for each window.

1. Lift and hold the control until the window is fully closed.
2. Release the control.
3. Lift and hold the control again for a few seconds.
4. Release the control.
5. Lift and hold the control again for a few seconds.
6. Release the control.
7. Press and hold the control until the window is fully open.
8. Lift and hold the control until the window is fully closed.
9. Release the control.
10. Open the window and then try to close it automatically.
11. Repeat the procedure if the window does not close automatically.

Accessory Delay (If Equipped)

You can use the window controls for several minutes after switching off the ignition or until opening either front door.

GLOBAL OPENING AND CLOSING

You can also operate the power windows with the ignition off using the global opening and global closing function.

Note: *Global opening will only operate for a short period of time after you have unlocked your vehicle using the remote control.*

Note: *Global closing will only operate if you have set the memory correctly for each window. See* ***Power Windows*** *(page 53).*

Global Opening (If Equipped)

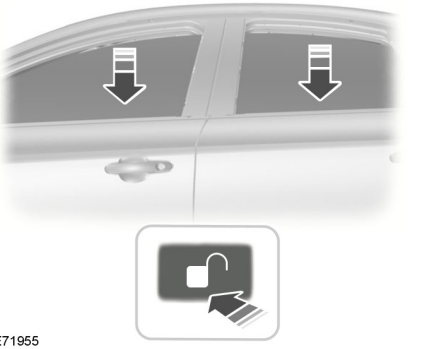

E71955

To open all the windows:

1. Press and release the remote control unlock button.
2. Press and hold the remote control unlock button for at least three seconds.

Fiesta (CCN) Vehicles Built From: 12-01-2015 Vehicles Built Up To: 14-10-2015, CG3582en enGBR, Edition date: 12/2014, First Printing

Press the lock or unlock button to stop the opening function.

Global Closing (If Equipped)

Vehicles Without Keyless Entry

WARNING

Take care when using global closing. In an emergency, press the lock or unlock button immediately to stop.

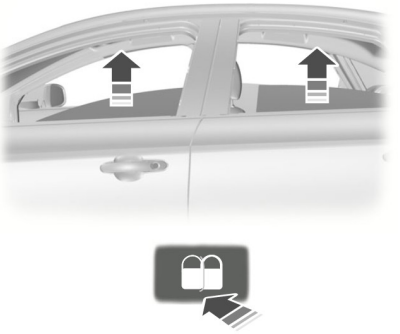

E71956

To close all the windows, press and hold the remote control lock button for at least three seconds. Press the lock or unlock button to stop the closing function. The bounce-back function is also on during global closing.

Vehicles With Keyless Entry

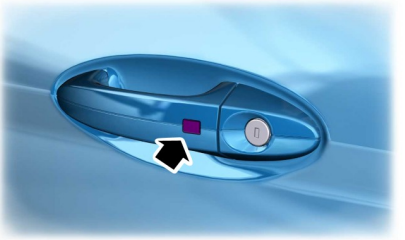

E87384

WARNING

Take care when using global closing. In an emergency, touch a door handle lock sensor to stop.

Note: *Global closing can be switched on using the driver's door handle. Global opening and closing can also be switched on using the buttons on the passive key.*

To close all the windows, press and hold the driver's door handle for at least three seconds. The bounce-back function is also on during global closing.

EXTERIOR MIRRORS

Power Exterior Mirrors

WARNING

Do not adjust the mirrors when your vehicle is moving.

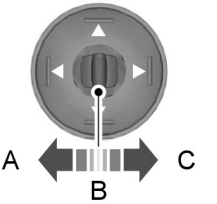

E70846

A	Left-hand mirror
B	Off
C	Right-hand mirror

Fiesta (CCN) Vehicles Built From: 12-01-2015 Vehicles Built Up To: 14-10-2015, CG3582en enGBR, Edition date: 12/2014, First Printing

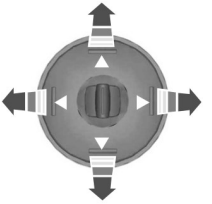

E70847

Press the arrows to adjust the mirror.

Electric Folding Mirrors

Automatic Folding and Unfolding

Note: *If the mirrors have been folded using the manual fold button they can only be unfolded using the manual fold button.*

The mirrors will fold automatically when you lock your vehicle with the key, the remote control or a keyless entry system request. The mirrors will unfold when you unlock your vehicle with the key, the remote control, a keyless entry system request, the driver's interior door handle or starting the engine.

Manual Folding and Unfolding

Note: *You can only fold the mirrors when the mirror switch is set to position B off.*

The electric folding mirrors operate with the ignition on.

Note: *You can operate the mirrors (mirror tilting and folding) for several minutes after you switch the ignition off. If you open a door you can no longer operate the mirrors.*

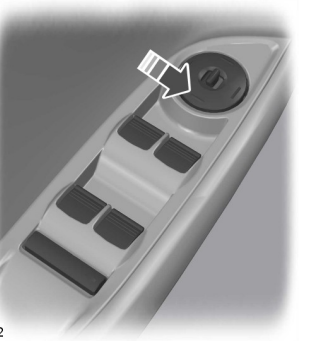

E144552

Press the downward arrow to fold or unfold the mirrors.

If you press the switch again while the mirrors are moving, they will stop and reverse the direction of movement.

Note: *When the mirrors are operated often during a short period of time, the system may become inoperable for a period of time to prevent damage due to overheating.*

Fold-Away Exterior Mirrors

Push the mirror toward the door window glass. Make sure that you fully engage the mirror in its support when returning it to its original position.

INTERIOR MIRROR

WARNING

Do not adjust the mirror when your vehicle is moving.

Note: *Do not clean the housing or glass of any mirror with harsh abrasives, fuel or other petroleum or ammonia-based cleaning products.*

Fiesta (CCN) Vehicles Built From: 12-01-2015 Vehicles Built Up To: 14-10-2015, CG3582en enGBR, Edition date: 12/2014, First Printing

You can adjust the interior mirror to your preference. Some mirrors also have a second pivot point. This lets you move the mirror head up or down and from side to side.

Pull the tab below the mirror toward you to reduce glare at night.

Auto-Dimming Mirror (If Equipped)

Note: *Do not block the sensors on the front and back of the mirror. Mirror performance may be affected. A rear center passenger or raised rear center head restraint may also block light from reaching the sensor.*

The mirror will dim automatically to reduce glare when bright lights are detected from behind your vehicle. It will automatically return to normal reflection when you select reverse gear to make sure you have a clear view when backing up.

Fiesta (CCN) Vehicles Built From: 12-01-2015 Vehicles Built Up To: 14-10-2015, CG3582en enGBR, Edition date: 12/2014, First Printing

GAUGES

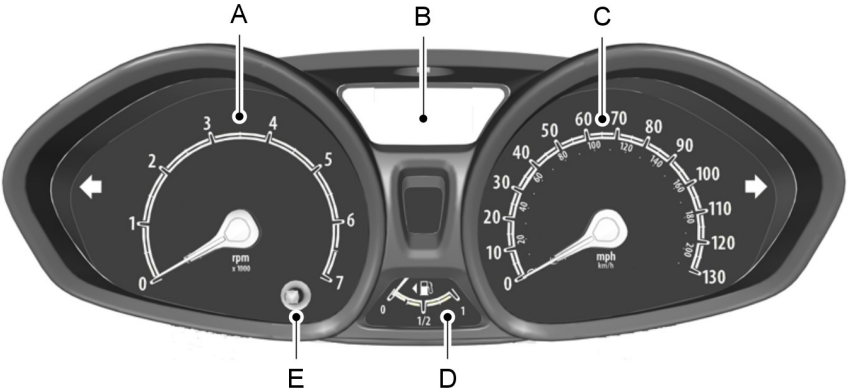

E102660

A	Tachometer
B	Information display and engine coolant temperature gauge
C	Speedometer
D	Fuel gauge
E	Tripmeter reset button

Engine Coolant Temperature Gauge

E140760

Displays the temperature of the engine coolant. At normal operating temperature the indicator will remain in the center section.

Fuel Gauge

Switch the ignition on. The fuel gauge will indicate approximately how much fuel is left in the fuel tank. The fuel gauge may vary slightly when your vehicle is moving or on a gradient. The arrow adjacent to the fuel pump symbol indicates on which side of your vehicle the fuel filler door is located.

Fiesta (CCN) Vehicles Built From: 12-01-2015 Vehicles Built Up To: 14-10-2015, CG3582en enGBR, Edition date: 12/2014, First Printing

WARNING LAMPS AND INDICATORS

The following warning lamps and indicators will alert you to a vehicle condition that may become serious. Some lamps will illuminate when you start your vehicle to make sure they work. If any lamps remain on after starting your vehicle, refer to the respective system warning lamp for further information.

Note: *Some warning indicators appear in the information display and function the same as a warning lamp but do not display when you start your vehicle.*

Anti-lock Braking System Warning Lamp

If it illuminates when you are driving, this indicates a malfunction. You will continue to have the normal braking system (without anti-lock braking system) unless the brake system warning lamp is also illuminated. Have your vehicle checked by an authorized dealer.

Brake System Warning Lamp

It will illuminate when you engage the parking brake with the ignition on.

If it illuminates when you are driving, check that the parking brake is not engaged. If the parking brake is not engaged, this indicates low brake fluid level or a brake system malfunction. Have your vehicle checked by an authorized dealer immediately.

WARNING

Driving your vehicle with the warning lamp on is dangerous. A significant decrease in braking performance may occur. It will take you longer to stop your vehicle. Have your vehicle checked by an authorized dealer immediately. Driving extended distances with the parking brake engaged can cause brake failure and the risk of personal injury.

Cruise Control Indicator

It will illuminate when you switch this feature on. See **Using Cruise Control** (page 124).

Direction Indicator

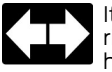

It will illuminate when the left or right direction indicator or the hazard warning flasher is turned on. If the indicators stay on or flash faster, check for a burnt out bulb. See **Changing a Bulb** (page 169).

Door Ajar Warning Lamp

It will illuminate when you switch the ignition on and remains on if any door, the hood or the liftgate is not closed properly.

Engine Coolant Temperature Warning Lamp

WARNING

Do not resume your journey if it illuminates despite the level being correct. Have your vehicle checked by an authorized dealer immediately.

Fiesta (CCN) Vehicles Built From: 12-01-2015 Vehicles Built Up To: 14-10-2015, CG3582en enGBR, Edition date: 12/2014, First Printing

If it stays on after starting or illuminates when driving, this indicates a malfunction. Stop your vehicle as soon as it is safe to do so and switch the engine off. Check the coolant level. See **Engine Coolant Check** (page 160).

Engine Oil Warning Lamp

WARNING

Do not resume your journey if it illuminates despite the level being correct. Have your vehicle checked by an authorized dealer immediately.

If it illuminates with the engine running or when you are driving, this indicates a malfunction. Stop your vehicle as soon as it is safe to do so and switch the engine off. Check the engine oil level. See **Engine Oil Check** (page 159).

Engine Warning Lamps

Malfunction Indicator Lamp

Powertrain Warning Lamp

All Vehicles

If either lamp illuminates when the engine is running, this indicates a malfunction. The engine will continue to run but it may have limited power. If it flashes when you are driving, reduce the speed of your vehicle immediately. If it continues to flash, avoid heavy acceleration or deceleration. Have your vehicle checked by an authorized dealer immediately.

WARNING

Have this checked immediately.

If both lamps illuminate together, stop your vehicle as soon as it is safe to do so (continued use may cause reduced power and cause the engine to stop). Switch the ignition off and attempt to restart the engine. If the engine restarts have your vehicle checked by an authorized dealer immediately. When the engine does not restart have your vehicle checked before continuing your journey.

Front Airbag Warning Lamp

If it fails to illuminate when you start your vehicle, continues to flash or remains on, it indicates a malfunction. Have your vehicle checked by an authorized dealer.

Front Fog Lamps Indicator

It will illuminate when you switch the front fog lamps on.

Frost Warning Lamp

WARNING

Even if the temperature rises to above 39ºF (4ºC) there is no guarantee that the road is free of hazards caused by inclement weather.

It will illuminate when the outside air temperature is 39ºF (4ºC) or below.

Glow Plug Indicator

If it illuminates, wait until it extinguishes before starting.

Fiesta (CCN) Vehicles Built From: 12-01-2015 Vehicles Built Up To: 14-10-2015, CG3582en enGBR, Edition date: 12/2014, First Printing

Headlamp Indicator

It will illuminate when you switch the headlamp dipped beam or the side and tail lamps on.

High Beam Indicator

It will illuminate when you switch the high beam headlamps on. It will flash when you use the headlamp flasher.

Ignition Warning Lamp

If it illuminates when driving, this indicates a malfunction. Switch off all unnecessary electrical equipment. Have your vehicle checked by an authorized dealer immediately.

Information Indicator

It will illuminate when a new message is stored in the information display. See **Information Messages** (page 71).

Low Fuel Level Warning Lamp

If it illuminates, refuel as soon as possible.

Rear Fog Lamps Indicator

It will illuminate when you switch the rear fog lamps on.

Safety Belt Minder Warning Lamp

It will illuminate and a chime will sound to remind you to fasten your safety belt. See **Safety Belt Minder** (page 23).

Shift Indicator

It will illuminate to inform you that shifting to a higher gear may give better fuel economy and lower CO2 emissions. It will not illuminate during periods of high acceleration, braking or when the clutch pedal is pressed.

Stability Control Indicator

While driving, it flashes when the system is operating. After you switch the ignition on, if it does not illuminate or illuminates continuously while driving, this indicates a malfunction. During a malfunction, the system switches off. Have your vehicle checked by an authorized dealer as soon as possible.

It will illuminate when you switch the system off. It will go out when you switch the system back on or when you switch the ignition off.

Start-Stop Indicator

It will illuminate when the engine has automatically stopped. It will flash to inform you when the engine needs to restart. See **Auto-Start-Stop** (page 102). See **Information Messages** (page 71).

Water In Fuel Indicator

Vehicles with a Diesel Engine

It will illuminate if there is excess water in the fuel filter. Have your vehicle checked by an authorized dealer as soon as possible.

Fiesta (CCN) Vehicles Built From: 12-01-2015 Vehicles Built Up To: 14-10-2015, CG3582en enGBR, Edition date: 12/2014, First Printing

WARNING LAMPS AND INDICATORS - 1.6L ECOBOOST™

The following warning lamps and indicators will alert you to a vehicle condition that may become serious. Some lamps will illuminate when you start your vehicle to make sure they work. If any lamps remain on after starting your vehicle, refer to the respective system warning lamp for further information.

Note: *Some warning indicators appear in the information display and function the same as a warning lamp but do not display when you start your vehicle.*

Anti-lock Braking System Warning Lamp

If it illuminates when you are driving, this indicates a malfunction. You will continue to have the normal braking system (without anti-lock braking system) unless the brake system warning lamp is also illuminated. Have your vehicle checked by an authorized dealer.

Brake System Warning Lamp

It will illuminate when you engage the parking brake with the ignition on.

If it illuminates when you are driving, check that the parking brake is not engaged. If the parking brake is not engaged, this indicates low brake fluid level or a brake system malfunction. Have your vehicle checked by an authorized dealer immediately.

WARNING

Driving your vehicle with the warning lamp on is dangerous. A significant decrease in braking performance may occur. It will take you longer to stop your vehicle. Have your vehicle checked by an authorized dealer immediately. Driving extended distances with the parking brake engaged can cause brake failure and the risk of personal injury.

Cruise Control Indicator

It will illuminate when you switch this feature on. See **Using Cruise Control** (page 124).

Direction Indicator

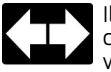

Illuminates when the left or right direction indicator or the hazard warning flasher is turned on. If the indicators stay on or flash faster, check for a burnt out bulb. See **Changing a Bulb** (page 169).

Door Ajar Warning Lamp

Illuminates when you switch the ignition on and remains on if any door, the hood or the liftgate is not closed properly.

Engine Coolant Temperature Warning Lamp

WARNING

Do not resume your journey if it illuminates despite the level being correct. Have your vehicle checked by an authorized dealer immediately.

Fiesta (CCN) Vehicles Built From: 12-01-2015 Vehicles Built Up To: 14-10-2015, CG3582en enGBR, Edition date: 12/2014, First Printing

If it stays on after starting or illuminates when driving, this indicates a malfunction. Stop your vehicle as soon as it is safe to do so and switch the engine off. Check the coolant level. See **Engine Coolant Check** (page 160).

Engine Oil Warning Lamp

WARNING

Do not resume your journey if it illuminates despite the level being correct. Have your vehicle checked by an authorized dealer immediately.

If it illuminates with the engine running or when you are driving, this indicates a malfunction. Stop your vehicle as soon as it is safe to do so and switch the engine off. Check the engine oil level. See **Engine Oil Check** (page 159).

Engine Warning Lamps

Malfunction Indicator Lamp

Powertrain Warning Lamp

All Vehicles

If either lamp illuminates when the engine is running, this indicates a malfunction. The engine will continue to run but it may have limited power. If it flashes when you are driving, reduce the speed of your vehicle immediately. If it continues to flash, avoid heavy acceleration or deceleration. Have your vehicle checked by an authorized dealer immediately.

WARNING

Have this checked immediately.

If both lamps illuminate together, stop your vehicle as soon as it is safe to do so (continued use may cause reduced power and cause the engine to stop). Switch the ignition off and attempt to restrart the engine. If the engine restarts have your vehicle checked by an authorized dealer immediately. When the engine does not restart have your vehicle checked before continuing your journey.

Front Airbag Warning Lamp

If it fails to illuminate when you start your vehicle, continues to flash or remains on, it indicates a malfunction. Have your vehicle checked by an authorized dealer.

Front Fog Lamps Indicator

It will illuminate when you switch the front fog lamps on.

Frost Warning Lamp

WARNING

Even if the temperature rises to above 39ºF (4ºC) there is no guarantee that the road is free of hazards caused by inclement weather.

It will illuminate when the outside air temperature is 39ºF (4ºC) or below.

Headlamp Indicator

It will illuminate when you switch the headlamp dipped beam or the side and tail lamps on.

Fiesta (CCN) Vehicles Built From: 12-01-2015 Vehicles Built Up To: 14-10-2015, CG3582en enGBR, Edition date: 12/2014, First Printing

High Beam Indicator

It will illuminate when you switch the high beam headlamps on. It will flash when you use the headlamp flasher.

Ignition Warning Lamp

If it illuminates when driving, this indicates a malfunction. Switch off all unnecessary electrical equipment. Have your vehicle checked by an authorized dealer immediately.

Information Indicator

It will illuminate when a new message is stored in the information display. See **Information Messages** (page 71).

Low Fuel Level Warning Lamp

If it illuminates, refuel as soon as possible.

Rear Fog Lamps Indicator

It will illuminate when you switch the rear fog lamps on.

Safety Belt Minder Warning Lamp

It will illuminate and a chime will sound to remind you to fasten your safety belt. See **Safety Belt Minder** (page 23).

Shift Indicator

It will illuminate to inform you that shifting to a higher gear may give better fuel economy and lower CO2 emissions. It will not illuminate during periods of high acceleration, braking or when the clutch pedal is pressed.

AUDIBLE WARNINGS AND INDICATORS

Automatic Transmission

Sounds when you open the driver's door and do not move the transmission selector lever to position **P**.

Key Outside Car

Vehicles With Keyless System

Sounds when you close the door, the engine is running and the system does not detect a passive key inside your vehicle.

Headlamps On

Sounds when you remove the key from the ignition and open the driver's door and you have left the headlamps or parking lamps on.

Low Fuel

A warning chime will sound when the remaining fuel is less than approximately 1.3 gallons (6 liters). The distance to empty displayed may vary depending on driving style and road conditions.

Safety Belt Minder

WARNINGS

The safety belt minder remains in stand-by mode when the front safety belts have been fastened. It will sound if either safety belt is unfastened.

Do not sit on top of a fastened safety belt to prevent the safety belt minder from coming on. The occupant protection system will only provide optimum protection when you use the safety belt properly.

Fiesta (CCN) Vehicles Built From: 12-01-2015 Vehicles Built Up To: 14-10-2015, CG3582en enGBR, Edition date: 12/2014, First Printing

Sounds when your vehicle speed exceeds the pre-determined limit and the front safety belts are unfastened. The chime will stop after a period of time.

Fiesta (CCN) Vehicles Built From: 12-01-2015 Vehicles Built Up To: 14-10-2015, CG3582en enGBR, Edition date: 12/2014, First Printing

GENERAL INFORMATION

WARNING

Driving while distracted can result in loss of vehicle control, accident and injury. We strongly recommend that you use extreme caution when using any device or feature that may take your focus off the road. Your primary responsibility is the safe operation of your vehicle. We recommend against the use of any handheld device while driving and that you comply with all applicable laws.

Note: *The information display will remain on for several minutes after you switch the ignition off.*

Device List

The icon changes to show the current function in use.

CD

Radio

Auxiliary input

Information Display Controls

E103626

Various systems on your vehicle can be controlled using the information display controls on your audio unit. Corresponding information is displayed in the information display.

To use the controls:

- Press the up or down arrow button to scroll through and highlight the options within a menu.
- Press the right arrow button to enter a submenu.
- Press the left arrow button to exit a submenu.
- Press and hold the left arrow button at any time to return to the main menu display.
- Press the **OK** button to choose and confirm settings or messages.

Menu Structure - Information Display

You can access the menu using the information display control.

Note: *Some options may appear slightly different or not at all if the items are optional.*

SYNC-Media allows you to access the SYNC® features.

Fiesta (CCN) Vehicles Built From: 12-01-2015 Vehicles Built Up To: 14-10-2015, CG3582en enGBR, Edition date: 12/2014, First Printing

SYNC-Phone	
Dial a number	
Redial	
Phonebook	
Call history	
Speed Dial	
Text messaging	
BT Devices	
Phone settings	

Menu	
Ford EcoMode	
SYNC-Settings	Bluetooth on
	Set defaults
	Master reset
	Install on SYNC
	System info
	Voice settings
SYNC-Apps	
Navigation	Route options
	Map display
	Assistance options
	Personal data
	Reset all settings
Audio settings	Adaptive volume
	Sound
	NAV audio mixing

Fiesta (CCN) Vehicles Built From: 12-01-2015 Vehicles Built Up To: 14-10-2015, CG3582en enGBR, Edition date: 12/2014, First Printing

Menu	
	DSP settings
	DSP equalizer
	Traffic
	News
	Alt. frequency
	RDS Regional
	DAB Service link
	Bluetooth
Vehicle settings	Traction Control
	ESC
	Active City Stop
	Deflation detection
	Hill start assist
	Park lock control
	Alarm system
	Rain sensor
	Powerfold mirrors
	Indicator
	Ambient light
	Chimes
Clock settings	Auto time (GPS)
	Set time
	Set date
	Set time zone
	Summer time
	24-hour mode
Display settings	Measure Unit

Fiesta (CCN) Vehicles Built From: 12-01-2015 Vehicles Built Up To: 14-10-2015, CG3582en enGBR, Edition date: 12/2014, First Printing

Menu	
	Language
	Dimming
MyKey	create MyKey
	Traction control
	ESC
	Active City Stop
	Speed limit
	Speed warning
	Volume limit
	Information
	clear all MyKeys
MyKey active	Information

System Check

All active warnings will display first if applicable. The system check menu may appear different based upon equipment options and current vehicle status. Press the up or down arrow button to scroll through the list.

CLOCK

Type 1

To adjust the clock, switch the ignition on and press buttons H or M on the information and entertainment display as necessary.

Type 2

Note: *Use the information display to adjust the clock. See (page 66).*

TRIP COMPUTER

E102759

Press the button to scroll through the displays.

You can reset the trip, average fuel consumption and average speed. Scroll to the required display, then press and hold the button, this will reset the trip computer.

The trip computer includes the following information displays:

Fiesta (CCN) Vehicles Built From: 12-01-2015 Vehicles Built Up To: 14-10-2015, CG3582en enGBR, Edition date: 12/2014, First Printing

Trip Odometer

MI TRIP

KM TRIP

Registers the distance traveled of individual journeys.

Distance to Empty

MI TO 0

KM TO 0

Indicates the approximate distance your vehicle will travel on the fuel remaining in the tank. The distance to empty displayed may vary depending on driving style and road conditions.

Average Fuel Consumption

Ø MPG

Ø L / 100KM

Indicates the average fuel consumption since the function was last reset.

Instantaneous Fuel Consumption

MPG

L / 100KM

Indicates the current fuel consumption.

Stationary Fuel Consumption

G / H

L / H

Indicates the current fuel consumption while stationary.

Average Speed

Ø MPH

ØKM / H

Indicates the average speed calculated since the function was last reset.

Distance Odometer

MI

KM

Registers the total distance your vehicle has traveled.

PERSONALIZED SETTINGS

Measure Units

To swap between imperial and metric units, scroll to this display and press the **OK** button.

Swapping between imperial and metric units will affect the following displays:

- Distance to empty.
- Average fuel consumption.
- Instantaneous fuel consumption.
- Average speed.

Switching Chimes Off

To switch chimes off, scroll to this display and press the **OK** button.

The following chimes can be switched off:

- Warning messages.
- Information messages.

Fiesta (CCN) Vehicles Built From: 12-01-2015 Vehicles Built Up To: 14-10-2015, CG3582en enGBR, Edition date: 12/2014, First Printing

INFORMATION MESSAGES

Note: *Depending on the options on your vehicle, not all of the messages will display or be available. Certain messages may be abbreviated or shortened depending upon which cluster type you have.*

E103626

Press the **OK** button to acknowledge and remove some messages from the information display. Other messages will be removed automatically after a short time.

Certain messages need to be confirmed before you can access the menus.

The message indicator illuminates to supplement some messages. It will be red or amber depending on the severity of the message and will remain on until the cause of the message has been rectified.

Some messages will be supplemented by a system specific symbol with a message indicator.

Active City Stop

Message	Message indicator	Action
Active City Stop Auto braking	Amber	See **Active City Stop** (page 126).
Active City Stop Sensor blocked Clean screen	Amber	See **Active City Stop** (page 126).
Active City Stop not available		See **Active City Stop** (page 126).
Active City Stop off		See **Active City Stop** (page 126).

Airbag

Message	Message indicator	Action
Airbag malfunction Service now	Amber	Have your vehicle checked by an authorized dealer as soon as possible.

Fiesta (CCN) Vehicles Built From: 12-01-2015 Vehicles Built Up To: 14-10-2015, CG3582en enGBR, Edition date: 12/2014, First Printing

Alarm

Message	Message indicator	Action
Alarm triggered Check vehicle	Amber	See **Security** (page 40).
Interior Scan deactivated	Amber	See **Security** (page 40).
Alarm system malfunction Service required	-	Have your vehicle checked by an authorized dealer as soon as possible.

Doors Open

Message	Message indicator	Action
Driver door open	Red	Vehicle is moving. Stop your vehicle as soon as safely possible and close.
Driver side rear door open	Red	Vehicle is moving. Stop your vehicle as soon as safely possible and close.
Passenger door open	Red	Vehicle is moving. Stop your vehicle as soon as safely possible and close.
Passenger side rear door open	Red	Vehicle is moving. Stop your vehicle as soon as safely possible and close.
Boot open	Red	Vehicle is moving. Stop your vehicle as soon as safely possible and close.
Bonnet open	Red	Vehicle is moving. Stop your vehicle as soon as safely possible and close. See **Opening and Closing the Hood** (page 148).
Driver door open	Amber	Vehicle not moving. Close.
Driver side rear door open	Amber	Vehicle not moving. Close.
Passenger door	Amber	Vehicle not moving. Close.

Fiesta (CCN) Vehicles Built From: 12-01-2015 Vehicles Built Up To: 14-10-2015, CG3582en enGBR, Edition date: 12/2014, First Printing

Message	Message indicator	Action
open		
Passenger side rear door open	Amber	Vehicle not moving. Close.
Boot open	Amber	Vehicle not moving. Close.
Bonnet open	Amber	Vehicle not moving. Close. See **Opening and Closing the Hood** (page 148).

Engine

Message	Message indicator	Action
Engine preheating	Amber	See **Starting a Diesel Engine** (page 100).

Engine Immobiliser

Message	Message indicator	Action
Immobiliser malfunction Service now	Red	Have your vehicle checked by an authorized dealer as soon as possible.

Hill Start Assist

Message	Message indicator	Action
Hill start assist not available	Amber	See **Hill Start Assist** (page 113).

Fiesta (CCN) Vehicles Built From: 12-01-2015 Vehicles Built Up To: 14-10-2015, CG3582en enGBR, Edition date: 12/2014, First Printing

Keyless System

Message	Message indicator	Action
Key not detected	Amber	See **Keyless Entry** (page 38).
Key outside car	Amber	See **Keyless Entry** (page 38).
Key Battery low Replace battery	Amber	See **Remote Control** (page 27).
Turn ignition off Use POWER button	Amber	See **Keyless Starting** (page 96).
Press brake to start	-	See **Keyless Starting** (page 96).
Press clutch to start	-	See **Keyless Starting** (page 96).
Close boot or use spare key	-	See **Keyless Entry** (page 38).
Steering lock engaged Turn steering wheel	-	See **Steering Wheel Lock** (page 98).

Lighting

Message	Message indicator	Action
Left indicator malfunction Change bulb	-	See **Changing a Bulb** (page 169).
Right indicator malfunction Change bulb	-	See **Changing a Bulb** (page 169).

Fiesta (CCN) Vehicles Built From: 12-01-2015 Vehicles Built Up To: 14-10-2015, CG3582en enGBR, Edition date: 12/2014, First Printing

Maintenance

Message	Message indicator	Action
Brake fluid Level low Service now	Red	See **Brake and Clutch Fluid Check** (page 161).
Brake system malfunction Stop safely	Red	Have your vehicle checked by an authorized dealer as soon as possible.
Engine oil pressure low Stop safely	Red	See **Engine Oil Check** (page 159).
Engine malfunction Service now	Amber	Have your vehicle checked by an authorized dealer as soon as possible.
Auto wiper/lights malfunction Service required	Amber	Have your vehicle checked by an authorized dealer as soon as possible.
Engine oil change due Service required	-	Have your vehicle checked by an authorized dealer as soon as possible.

MyKey

Message	Message indicator	Action
MyKey vehicle at top speed	Amber	Displays when a MyKey is in use and the MyKey speed limit is on and your vehicle speed is approaching 80 mph (130 km/h).
MyKey active Drive safely	-	Displays when MyKey is active.
MyKey Speed limited to XX mph	-	Displays when starting your vehicle and MyKey is in use and the MyKey speed limit is on.
MyKey Speed limited to XX km/h	-	Displays when starting your vehicle and MyKey is in use and the MyKey speed limit is on.

Fiesta (CCN) Vehicles Built From: 12-01-2015 Vehicles Built Up To: 14-10-2015, CG3582en enGBR, Edition date: 12/2014, First Printing

Message	Message indicator	Action
MyKey Check speed Drive safely	-	Displays when MyKey is active.
MyKey Vehicle near top speed	-	Displays when a MyKey is in use and the MyKey speed limit is reached.
Buckle up to unmute audio	-	Displays when a MyKey is in use and BeltMinder is activated.
MyKey Park aid cannot be deactivated	-	Displays when a MyKey is in use and park aid is activated.
MyKey ESC cannot be deactivated	-	Displays when programming a MyKey.

Parking Brake

Message	Message indicator	Action
Park brake applied	Red	See **Parking Brake** (page 115).
Park brake applied	Amber	See **Parking Brake** (page 115).

Stability Control

Message	Message indicator	Action
Traction control off	Amber	See **Using Stability Control** (page 117).
Sport mode	Amber	See **Using Stability Control** (page 117).
Electronic stability control off	Amber	See **Using Stability Control** (page 117).

Fiesta (CCN) Vehicles Built From: 12-01-2015 Vehicles Built Up To: 14-10-2015, CG3582en enGBR, Edition date: 12/2014, First Printing

Message	Message indicator	Action
ABS malfunction Service now	Amber	Have your vehicle checked by an authorized dealer as soon as possible.
ESP malfunction Next service	-	Have your vehicle checked by an authorized dealer as soon as possible.
ESP off	-	See **Using Stability Control** (page 117).

Starting and Stopping the Engine

Message	Message indicator	Action
Engine start pending Please wait	Amber	See **Starting and Stopping the Engine** (page 96).
Engine start cancelled	-	See **Starting and Stopping the Engine** (page 96).
Diesel filter overloaded See manual	-	See **Starting and Stopping the Engine** (page 96).
Press brake to start	-	See **Starting and Stopping the Engine** (page 96).
Press clutch to start	-	See **Starting and Stopping the Engine** (page 96).
Press brake and clutch to start	-	See **Starting and Stopping the Engine** (page 96).
Cranking time exceeded	-	See **Starting and Stopping the Engine** (page 96).

Fiesta (CCN) Vehicles Built From: 12-01-2015 Vehicles Built Up To: 14-10-2015, CG3582en enGBR, Edition date: 12/2014, First Printing

Start-stop

Message	Message indicator	Action
Auto StartStop Switch ignition off	Red	Switch the ignition off before leaving your vehicle if the system has shut down the engine. See **Auto-Start-Stop** (page 102).
Auto StartStop Press a pedal to start engine	-	The engine needs to be restarted, press a pedal to start. See **Auto-Start-Stop** (page 102).
Auto StartStop Manual start required	-	The system is not functioning. A manual restart is required.
Auto StartStop Select neutral	-	Select neutral for the system to restart the engine. See **Auto-Start-Stop** (page 102).

Steering

Message	Message indicator	Action
Power steering malfunction Service now	Red	Have your vehicle checked by an authorized dealer as soon as possible.
Steering lock malfunction Stop safely	Red	Stop your vehicle in a safe place. Have your vehicle checked by an authorized dealer as soon as possible.
Steering lock malfunction Service now	Amber	Full steering will be maintained but you will need to exert greater force on the steering wheel. Have your vehicle checked by an authorized dealer as soon as possible.

Fiesta (CCN) Vehicles Built From: 12-01-2015 Vehicles Built Up To: 14-10-2015, CG3582en enGBR, Edition date: 12/2014, First Printing

Tire pressure monitoring system

Message	Message indicator	Action
Check tyre pressures	Amber	The pressure in one or more tires has dropped. Check as soon as possible.
Tyre pressure sys malfunction Service required	Amber	Permanent malfunction. Have your vehicle checked by an authorized dealer.
Tyre monitor malfunction Service required	Amber	Permanent malfunction. Have your vehicle checked by an authorized dealer.
Tyre sensors not detected Check manual	Amber	Have your vehicle checked by an authorized dealer.

Transmission

Message	Message indicator	Action
Transmission malfunction Service now	Red	Have your vehicle checked by an authorized dealer.
Transmission overtemperature Stop safely	Red	The transmission is overheating and needs to cool. Stop your vehicle as soon as it is safe to do so. Move the transmission selector lever to position **N** or **P** and apply the parking brake. Switch off the ignition until the transmission has cooled and the message disappears from the display.
Use brake Stop safely	Red	Have your vehicle checked by an authorized dealer.
Vehicle not in Park Select P	-	See **Automatic Transmission** (page 110). See **Starting and Stopping the Engine** (page 96).
Select N or P to start	-	See **Automatic Transmission** (page 110). See **Starting and Stopping the Engine** (page 96).

Fiesta (CCN) Vehicles Built From: 12-01-2015 Vehicles Built Up To: 14-10-2015, CG3582en enGBR, Edition date: 12/2014, First Printing

Message	Message indicator	Action
Press brake to start	-	See **Starting and Stopping the Engine** (page 96).
Select N to start	-	See **Automatic Transmission** (page 110). See **Starting and Stopping the Engine** (page 96).
Door open apply brake	-	See **Automatic Transmission** (page 110). See **Starting and Stopping the Engine** (page 96).
Transmission hot Stop or speed up	-	The transmission is overheating and needs to cool. Stop your vehicle as soon as it is safe to do so to let it cool or speed up.
Transmission hot Wait...	-	The transmission is overheating and needs to cool. Wait as needed to let it cool.
Transmission ready	-	Your vehicle is ready to drive.
Press brake to unlock selector lever	-	See **Automatic Transmission** (page 110). See **Starting and Stopping the Engine** (page 96).
Selector lever unlocked	-	See **Automatic Transmission** (page 110). See **Starting and Stopping the Engine** (page 96).
Transmission not in Park	-	See **Automatic Transmission** (page 110). See **Starting and Stopping the Engine** (page 96).

Fiesta (CCN) Vehicles Built From: 12-01-2015 Vehicles Built Up To: 14-10-2015, CG3582en enGBR, Edition date: 12/2014, First Printing

PRINCIPLE OF OPERATION

Outside Air

Keep the air intakes in front of the windshield free from obstruction (such as snow or leaves) to allow the climate control system to function effectively.

Recirculated Air

WARNING

Prolonged use of recirculated air may cause the windows to mist up. If the windows mist up, follow the settings for demisting the windshield.

The air currently in the passenger compartment recirculates. Outside air does not enter your vehicle.

Heating

Heating performance depends on the temperature of the engine coolant.

General Information on Controlling the Interior Climate

Fully close all the windows.

Warming the Interior

Direct the air toward your feet. In cold or humid weather conditions, direct some of the air toward the windshield and the door windows.

Cooling the Interior

Direct the air toward your face.

Air Conditioning

The system directs air through the evaporator for cooling. The evaporator extracts humidity from the air to help keep the windows free of mist. The system directs the resulting condensation to the outside of your vehicle, which may cause a small pool to form under your vehicle. This is normal.

Note: *The air conditioning operates only when the temperature is above 39ºF (4ºC).*

Note: *When you use air conditioning, your vehicle uses more fuel.*

AIR VENTS

Center Air Vents

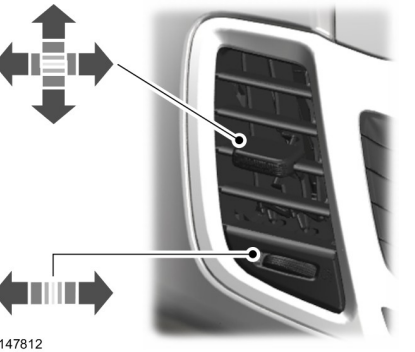

E147812

Side Air Vent

E71942

Fiesta (CCN) Vehicles Built From: 12-01-2015 Vehicles Built Up To: 14-10-2015, CG3582en enGBR, Edition date: 12/2014, First Printing

MANUAL CLIMATE CONTROL

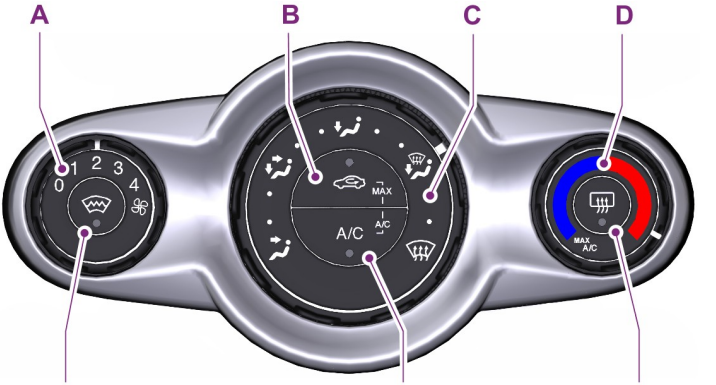

A **Fan speed control:** Controls the volume of air circulated in your vehicle. Adjust to select the desired fan speed or switch off. If you switch the fan off, the windshield may fog up.

B **Recirculated air:** Press the button to switch between outside air and recirculated air. When you select recirculated air, the button illuminates and the air currently in the passenger compartment recirculates. This can reduce the time needed to cool the interior and reduce unwanted odors from entering your vehicle.

C **Air distribution control:** Adjust to select the desired air distribution.

D **Temperature control:** Controls the temperature of the air circulated in your vehicle. Adjust to select the desired temperature. If you select **MAX A/C** and also press buttons B and F, the system distributes recirculated air through the instrument panel air vents. This mode is more economical and efficient than normal air conditioning.

E **Heated rear window:** Press the button to defog and clear the rear window of a thin covering of ice.

F **Air conditioning:** Press the button to switch the air conditioning on or off. Air conditioning cools your vehicle using outside air. To improve air conditioning when starting your vehicle, drive with the windows slightly open for two to three minutes.

G **Heated windshield:** Press the button to defog and clear the windshield of a thin covering of ice.

Fiesta (CCN) Vehicles Built From: 12-01-2015 Vehicles Built Up To: 14-10-2015, CG3582en enGBR, Edition date: 12/2014, First Printing

AUTOMATIC CLIMATE CONTROL

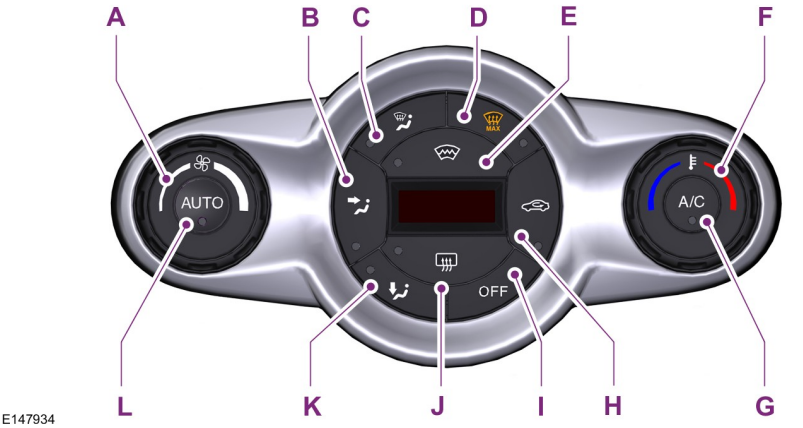

A **Fan speed:** Controls the volume of air circulated in your vehicle. Rotate the control to select the desired fan speed. The setting is shown in the display.

B **Instrument panel:** Press the button to distribute air through the instrument panel air vents.

C **Windshield:** Press the button to distribute air through the windshield air vents. You can also use this setting to defog and clear the windshield of a thin covering of ice.

D **MAX Defrost:** Press the button to distribute outside air through the windshield air vents. Air conditioning is automatically selected. The fan is set to the highest speed and the temperature to HI. When the air distribution is set in this position, you are unable to select recirculated air or manually adjust the fan speed and temperature control. Press the **AUTO** button to return to auto mode.

E **Heated windshield:** Press the button to defog and clear the windshield of a thin covering of ice.

F **Temperature control:** Controls the temperature of the air circulated in your vehicle. Adjust to select the desired temperature.

G **Air conditioning:** Press the button to switch the air conditioning on or off. Air conditioning cools your vehicle using outside air. To improve air conditioning when starting your vehicle, drive with the windows slightly open for two to three minutes.

Fiesta (CCN) Vehicles Built From: 12-01-2015 Vehicles Built Up To: 14-10-2015, CG3582en enGBR, Edition date: 12/2014, First Printing

H **Recirculated air:** Press the button to switch between outside air and recirculated air. The air currently in the passenger compartment recirculates. This can reduce the time needed to cool the interior and reduce unwanted odors from entering your vehicle.

I **Off button:** Press the button to switch the system off.

J **Heated rear window:** Press the button to defog and clear the rear window of a thin covering of ice.

K **Footwell:** Press the button to distribute air through the footwell air vents.

L **AUTO:** Press the button to select automatic operation. The system automatically controls the temperature, amount and distribution of the airflow to reach and maintain your previously selected temperature.

Temperature Control

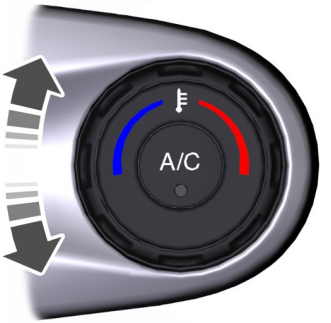

E148690

You can set the temperature between 61ºF (16ºC) and 82ºF (28ºC) in steps of 1ºF (0.5ºC). In position low, the system switches to permanent cooling. In position high, the system switches to permanent heating.

Note: *If you select either position low or high, the system will not regulate a stable temperature.*

HINTS ON CONTROLLING THE INTERIOR CLIMATE

General Hints

Note: *Prolonged use of recirculated air may cause the windows to fog up.*

Note: *A small amount of air may be felt from the footwell air vents regardless of the air distribution setting.*

Note: *To reduce humidity build-up inside your vehicle, do not drive with the system switched off or with recirculated air always switched on.*

Note: *Do not place objects under the front seats as this may interfere with the airflow to the rear seats.*

Note: *Remove any snow, ice or leaves from the air intake area at the base of the windshield.*

Manual Climate Control

Note: *To reduce fogging of the windshield during humid weather, adjust the air distribution control to the windshield air vents position. Increase the temperature and fan speed to improve clearing, if required.*

Fiesta (CCN) Vehicles Built From: 12-01-2015 Vehicles Built Up To: 14-10-2015, CG3582en enGBR, Edition date: 12/2014, First Printing

Automatic Climate Control

Note: *Do not adjust the settings when your vehicle interior is extremely hot or cold. The system automatically adjusts to the previously stored settings. For the system to function efficiently, the instrument panel and side air vents should be fully open.*

Note: *At low ambient temperatures with **AUTO** selected, the air stream is directed toward the windshield and side windows for as long as the engine remains cold.*

Note: *When the system is switched off, outside air is prevented from entering your vehicle.*

Note: *When you select **AUTO** mode and the interior and exterior temperatures are high, the system automatically selects recirculated air to maximize cooling of the interior. When the desired air temperature is reached, the system automatically selects outside air.*

Note: *When you select windshield defrosting and defogging, the instrument panel and footwell level functions automatically switch off and air conditioning switches on. Outside air flows into your vehicle.*

Heating the Interior Quickly

	Vehicles With Manual Climate Control	Vehicles With Automatic Climate Control
1	Adjust the fan speed to the highest setting.	Press the **AUTO** button.
2	Adjust the temperature control to the highest setting.	Adjust the temperature control to the desired setting.
3	Adjust the air distribution control to the footwell air vents position.	

Recommended Settings for Heating

	Vehicles With Manual Climate Control	Vehicles With Automatic Climate Control
1	Adjust the fan speed to the second setting.	Press the **AUTO** button.
2	Adjust the temperature control to the desired setting.	Adjust the temperature control to the desired setting.
3	Adjust the air distribution control to the footwell and windshield air vents position.	

Fiesta (CCN) Vehicles Built From: 12-01-2015 Vehicles Built Up To: 14-10-2015, CG3582en enGBR, Edition date: 12/2014, First Printing

Cooling the Interior Quickly

	Vehicles With Manual Climate Control	Vehicles With Automatic Climate Control
1	Adjust the fan speed to the highest setting.	Press the **AUTO** button.
2	Adjust the temperature control setting to **MAX A/C**.	Adjust the temperature control to the desired setting.
3	Adjust the air distribution control to the instrument panel air vents position.	Or, press the **MAX A/C** button.

Recommended Settings for Cooling

	Vehicles With Manual Climate Control	Vehicles With Automatic Climate Control
1	Adjust the fan speed to the second setting.	Press the **AUTO** button.
2	Adjust the temperature control to the desired setting.	Adjust the temperature control to the desired setting.
3	Adjust the air distribution control to the instrument panel air vents position.	
4	Press the **A/C** button.	

Vehicle Stationary for Extended Periods During Extreme High Ambient Temperatures

	Vehicles With Manual Climate Control	Vehicles With Automatic Climate Control
1	Apply the parking brake.	Apply the parking brake.
2	Move the transmission selector lever to position **P** or neutral.	Move the transmission selector lever to position **P** or neutral.
3	Adjust the temperature control to the **MAX A/C** position.	Press the **AUTO** button.
4	Adjust the fan speed to the highest setting.	Adjust the temperature control to the desired setting.

Fiesta (CCN) Vehicles Built From: 12-01-2015 Vehicles Built Up To: 14-10-2015, CG3582en enGBR, Edition date: 12/2014, First Printing

Side Window Defogging in Cold Weather

	Vehicles With Manual Climate Control	Vehicles With Automatic Climate Control
1	Adjust the fan speed to the highest setting.	Press the MAX defrost button.
2	Adjust the temperature control to the highest setting.	Adjust the temperature control to the desired setting.
3	Adjust the air distribution control to the windshield position.	
4	Press the **A/C** button.	

Maximum Cooling Performance in Instrument Panel or Instrument Panel and Footwell Positions

1. Adjust the temperature control to the lowest setting.
2. Press the **A/C** and recirculated air buttons.
3. Adjust the fan speed to the highest setting initially and then adjust it to suit the desired comfort level.

HEATED WINDOWS AND MIRRORS

Heated Windows

Use the heated windows to defrost or demist the windshield or rear window.

Note: *The heated windows operate only when the engine is running.*

Heated Windshield

Heated Rear Window

Heated Exterior Mirrors

Electric exterior mirrors have a heating element that will defrost or demist the mirror glass. They will switch on automatically when you switch the heated rear window on.

Fiesta (CCN) Vehicles Built From: 12-01-2015 Vehicles Built Up To: 14-10-2015, CG3582en enGBR, Edition date: 12/2014, First Printing

SITTING IN THE CORRECT POSITION

WARNINGS

Do not recline the seat backrest too far as this can cause the occupant to slide under the safety belt, resulting in serious injury in the event of a crash.

Sitting improperly, out of position or with the seat backrest reclined too far, can result in serious injury or death in the event of a crash. Always sit upright against your seat backrest, with your feet on the floor.

Do not place objects higher than the seat backrest to reduce the risk of serious injury in the event of a crash or during heavy braking.

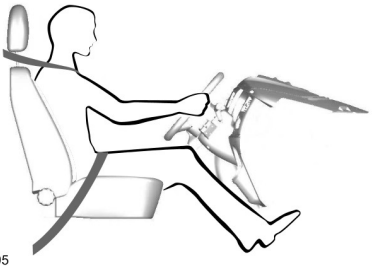

E68595

When you use them properly, the seat, head restraint, safety belt and airbags will provide optimum protection in the event of a crash.

We recommend that you follow these guidelines:

- Sit in an upright position with the base of your spine as far back as possible.
- Do not recline the seat backrest more than 30 degrees.
- Adjust the head restraint so that the top of it is level with the top of your head and as far forward as possible. Make sure that you remain comfortable.
- Keep sufficient distance between yourself and the steering wheel. We recommend a minimum of 10 inches (25 centimeters) between your breastbone and the airbag cover.
- Hold the steering wheel with your arms slightly bent.
- Bend your legs slightly so that you can press the pedals fully.
- Position the shoulder strap of the safety belt over the center of your shoulder and position the lap strap tightly across your hips.

Make sure that your driving position is comfortable and that you can maintain full control of your vehicle.

HEAD RESTRAINTS

WARNING

Fully adjust the head restraint before you sit in or operate your vehicle. This will help minimize the risk of neck injury in the event of a collision. Do not adjust the head restraint when your vehicle is moving.

Adjusting the Head Restraints

Adjust the head restraint so that the top of it is level with the top of your head.

Fiesta (CCN) Vehicles Built From: 12-01-2015 Vehicles Built Up To: 14-10-2015, CG3582en enGBR, Edition date: 12/2014, First Printing

Removing the Head Restraints

Front Head Restraint

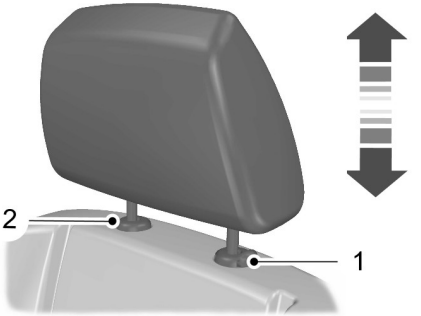

E140447

1. Press and hold the locking button.
2. Using a suitable implement release the retaining clip.

Rear Outer Head Restraint

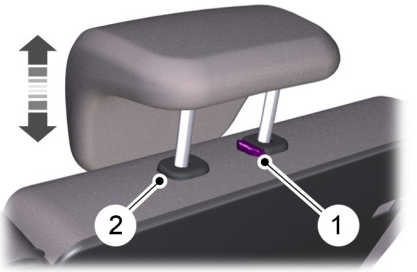

E140448

1. Press and hold the locking button.
2. Using a suitable implement release the retaining clip.

Rear Center Head Restraint (If Equipped)

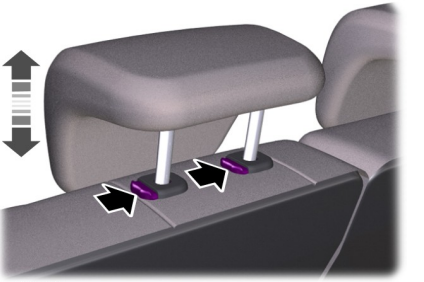

E135401

Press the locking buttons and remove the head restraint.

MANUAL SEATS - 3-DOOR

WARNINGS

Do not adjust the driver seat when your vehicle is moving.

Do not place cargo or any objects behind the seat backrest before returning it to the original position. Pull on the seat backrest to make sure that it has fully latched after returning the seat backrest to its original position. An unlatched seat may become dangerous if you stop suddenly or have a crash.

Moving the Seat Backward and Forward

WARNING

Rock the seat backward and forward after releasing the lever to make sure that it is fully engaged in its catch. A seat which is not fully engaged in its catch could move when your vehicle is moving. This may result in the loss of control of your vehicle, serious personal injury or death.

Fiesta (CCN) Vehicles Built From: 12-01-2015 Vehicles Built Up To: 14-10-2015, CG3582en enGBR, Edition date: 12/2014, First Printing

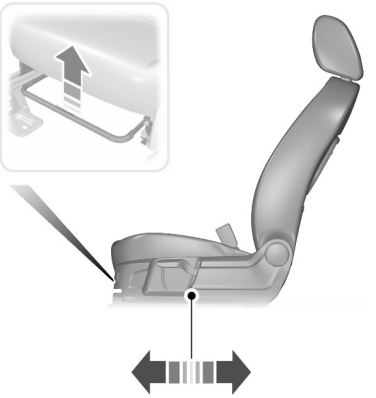

E147926

Folding the Seat Backrest Forward

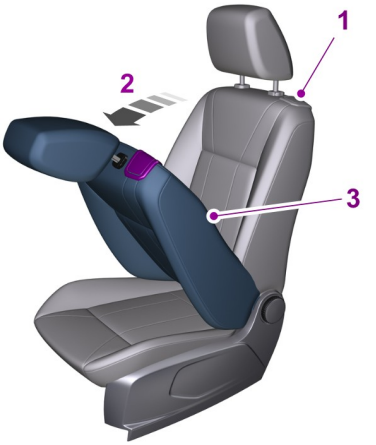

E159979

1. Pull the locking lever to release the seat backrest.

Note: *Do not hold onto the locking lever when moving the seat.*

2. Fold the seat backrest fully forward.
3. Slide the seat forward.

Returning the Seat Backrest to the Seating Position

Note: *Make sure the seat base has been moved to the correct position before folding the seat backrest upright.*

E159980

1. Push the seat backrest to slide the tilted seat to the end stop (memory position) or desired seating position.
2. Fold the seat backrest to the upright position.

Adjusting the Lumbar Support

E142199

Fiesta (CCN) Vehicles Built From: 12-01-2015 Vehicles Built Up To: 14-10-2015, CG3582en enGBR, Edition date: 12/2014, First Printing

Adjusting the Height of the Driver Seat

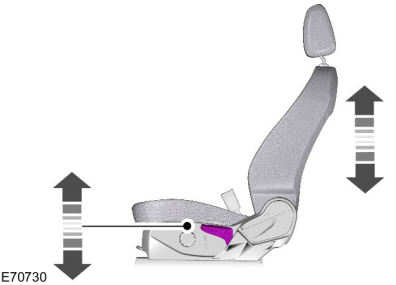

E70730

Recline Adjustment

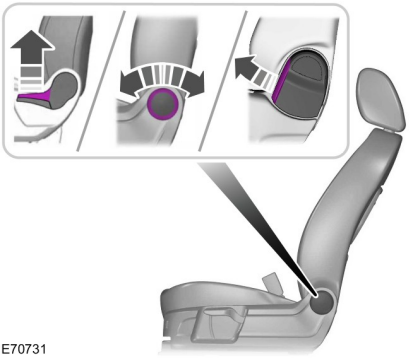

E70731

MANUAL SEATS - 5-DOOR

WARNING

Do not adjust the driver seat when your vehicle is moving.

Moving the Seat Backward and Forward

WARNING

Rock the seat backward and forward after releasing the lever to make sure that it is fully engaged in its catch. A seat which is not fully engaged in its catch could move when your vehicle is moving. This may result in the loss of control of your vehicle, serious personal injury or death.

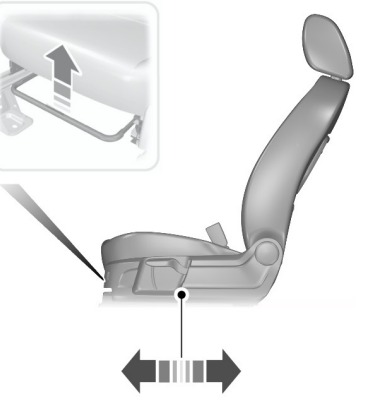

E147926

Adjusting the Lumbar Support (If Equipped)

E142199

Fiesta (CCN) Vehicles Built From: 12-01-2015 Vehicles Built Up To: 14-10-2015, CG3582en enGBR, Edition date: 12/2014, First Printing

Adjusting the Height of the Driver Seat

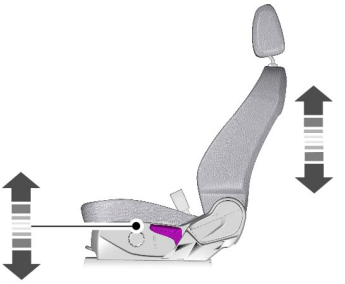

E70730

Recline Adjustment

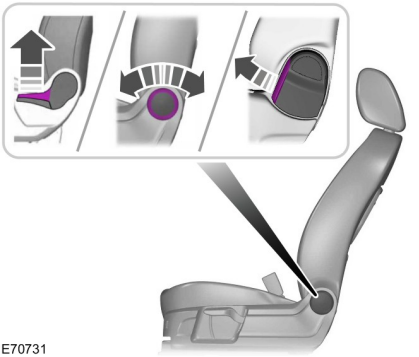

E70731

REAR SEATS

Folding the Seatback

WARNING

When folding the seatbacks down, take care not to get your fingers caught between the seatback and seat frame.

E102532

1. Press the unlock buttons down and hold them there.
2. Push the seatback forward.

Note: *Do not attempt to fold the rear seat cushion forward.*

Note: *Lower the head restraints. See* ***Head Restraints*** *(page 88).*

Unfolding the Seatback

WARNINGS

When folding the seatbacks up, make sure that the safety belts are visible to an occupant and not caught behind the seat.

Make sure that the seats and the seatbacks are secure and fully engaged in their catches.

Fiesta (CCN) Vehicles Built From: 12-01-2015 Vehicles Built Up To: 14-10-2015, CG3582en enGBR, Edition date: 12/2014, First Printing

HEATED SEATS

WARNING

People who are unable to feel pain to their skin because of advanced age, chronic illness, diabetes, spinal cord injury, medication, alcohol use, exhaustion or other physical conditions, must exercise care when using the heated seat. The heated seat may cause burns even at low temperatures, especially if used for long periods of time. Do not place anything on the seat that insulates against heat, such as a blanket or cushion. This may cause the heated seat to overheat. Do not puncture the seat with pins, needles or other pointed objects. This may damage the heating element which may cause the heated seat to overheat. An overheated seat may cause serious personal injury.

Do not do the following:

- Place heavy objects on the seat.
- Operate the heated seat if water or any other liquid is spilled on the seat. Allow the seat to dry thoroughly.
- Operate the heated seats unless the engine is running. Doing so could drain your vehicle battery.

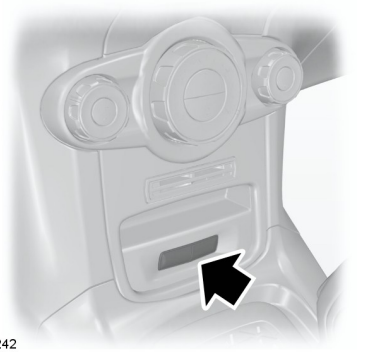

E155242

Press the required switch once for maximum heating. Two lights will illuminate on the switch. Press the switch again for a lower heating level. One light will illuminate on the switch. Press the switch again to turn the heating off completely.

The heated seats will only operate with the ignition switched on.

The heated seat will remain on until either the heated seat switch or the ignition is switched off.

Fiesta (CCN) Vehicles Built From: 12-01-2015 Vehicles Built Up To: 14-10-2015, CG3582en enGBR, Edition date: 12/2014, First Printing

12 Volt DC Power Point

WARNING

Do not plug optional electrical accessories into the cigar lighter socket. Incorrect use of the lighter can cause damage not covered by your warranty, and can result in fire or serious injury.

Note: *When you switch the ignition on, you can use the socket to power 12 volt appliances with a maximum current rating of 20 amps.*

After you switch the ignition off the power supply will only work for a maximum of 30 minutes.

Note: *Do not insert objects other than an accessory plug into the power point. This will damage the outlet and blow the fuse.*

Note: *Do not hang any type of accessory or accessory bracket from the plug.*

Note: *Do not use the power point over the vehicle capacity of 12 volt DC 180 watt or a fuse may blow.*

Note: *Do not use the power point for operating a cigar lighter element.*

Note: *Incorrect use of the power point can cause damage not covered by your warranty.*

Note: *Always keep the power point caps closed when not in use.*

Run the engine for full capacity use of the power point.

To prevent the battery from running out of charge:

- Do not use the power point longer than necessary when the engine is not running.
- Do not leave devices plugged in overnight or when your vehicle is parked for extended periods.

Location

Power points may be found:

- on the center console
- on the rear of the center console.

CIGAR LIGHTER (If Equipped)

Note: *Do not hold the cigar lighter element pressed in.*

Note: *If you use the socket when the engine is not running, the battery may lose charge.*

Note: *When you switch the ignition on, you can use the socket to power 12 volt appliances with a maximum current rating of 20 amps.*

Note: *After you switch the ignition off the power supply will only work for a maximum of 30 minutes.*

Note: *Use only Ford accessory connectors or connectors specified for use with SAE standard sockets.*

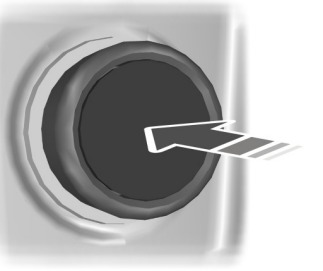

E103382

Press the element in to use the cigar lighter. It will pop out automatically.

Fiesta (CCN) Vehicles Built From: 12-01-2015 Vehicles Built Up To: 14-10-2015, CG3582en enGBR, Edition date: 12/2014, First Printing

CUP HOLDERS

Note: *Stow items in the cupholder carefully as items may become loose during hard braking, acceleration or crashes, including hot drinks which may spill.*

WARNING

Use only soft cups in the cup holders. Hard objects can injure you in a crash.

Fiesta (CCN) Vehicles Built From: 12-01-2015 Vehicles Built Up To: 14-10-2015, CG3582en enGBR, Edition date: 12/2014, First Printing

GENERAL INFORMATION

WARNINGS

Extended idling at high engine speeds can produce very high temperatures in the engine and exhaust system, creating the risk of fire or other damage.

Do not park, idle or drive your vehicle on dry grass or other dry ground cover. The emission system heats up the engine compartment and exhaust system, creating the risk of fire.

Do not start the engine in a closed garage or in other enclosed areas. Exhaust fumes can be toxic. Always open the garage door before you start the engine.

If you smell exhaust fumes inside your vehicle, have your vehicle checked by an authorized dealer immediately. Do not drive your vehicle if you smell exhaust fumes.

If you disconnect the battery, your vehicle may exhibit some unusual driving characteristics for approximately 5 miles (8 kilometers) after you reconnect it. This is because the engine management system must realign itself with the engine. You can disregard any unusual driving characteristics during this period.

The powertrain control system meets all Canadian interference-causing equipment standard requirements regulating the impulse electrical field or radio noise.

When you start the engine, avoid pressing the accelerator pedal before and during operation. Only use the accelerator pedal when you have difficulty starting the engine.

IGNITION SWITCH

E72128

0(off) - The ignition is off.

Note: *When you switch the ignition off and leave your vehicle, do not leave your key in the ignition. This could cause your vehicle battery to lose charge.*

I (accessory) - Allows the electrical accessories such as the radio to operate while the engine is not running.

Note: *Do not leave the ignition key in this position for too long to avoid your vehicle battery losing charge.*

II (on) - All electrical circuits operational. Warning lamps and indicators are illuminated.

III (start) - cranks the engine. Release the key as soon as the engine starts.

KEYLESS STARTING

WARNINGS

The system may not function if the key is close to metal objects or electronic devices such as cell phones.

Always check that the steering wheel lock is deactivated before attempting to move your vehicle.

Note: *The ignition will automatically switch off when you leave your vehicle unattended. This is to prevent your vehicle battery running out of charge.*

Fiesta (CCN) Vehicles Built From: 12-01-2015 Vehicles Built Up To: 14-10-2015, CG3582en enGBR, Edition date: 12/2014, First Printing

Note: *A valid key must be located inside your vehicle to switch the ignition on and start the engine.*

Ignition On

Press the button once. It is located on the instrument panel near the steering wheel. All electrical circuits and accessories are operational and the warning lamps and indicators will illuminate.

E160172

Starting With Manual Transmission

Note: *Releasing the clutch pedal while the engine is starting will stop the engine cranking and return to ignition on.*

1. Fully depress the clutch pedal.
2. Briefly press the button.

Starting With Automatic Transmission

Note: *Releasing the brake pedal while the engine is starting will stop the engine cranking and return to ignition on.*

1. Move the transmission selector lever to position P or N.
2. Fully depress the brake pedal.
3. Briefly press the button.

Starting a Diesel Engine

Note: *Engine cranking will not commence until the engine glow plug indicator has extinguished. This may take several seconds in extremely cold conditions.*

Failure to Start

All Vehicles

The system will not function if:

- The key frequencies are jammed.
- The key battery has no charge.

If you are unable to start your vehicle, do the following.

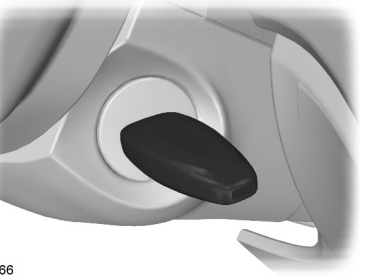

E99666

1. Hold the key next to the steering column exactly as shown.
2. With the key in this position you can use the button to switch the ignition on and start your engine.

Manual Transmission

Note: *Releasing the clutch pedal while the engine is starting will stop the engine cranking and return to ignition on. A message will be shown in the display.*

If the engine does not crank when the clutch pedal has been fully depressed and the button is pressed:

1. Fully depress both the clutch and brake pedals.
2. Press the button until the engine starts.

Fiesta (CCN) Vehicles Built From: 12-01-2015 Vehicles Built Up To: 14-10-2015, CG3582en enGBR, Edition date: 12/2014, First Printing

Stopping the Engine When Your Vehicle is Stationary

Note: *The ignition, all electrical circuits warning lamps and indicators will be switched off.*

Manual Transmission

Press the button.

Automatic Transmission

1. Move the transmission selector lever to position P.
2. Press the button.

Stopping the Engine When Your Vehicle is Moving

WARNING

Switching off the engine when your vehicle is still moving will result in a loss of brake and steering assistance. The steering will not lock, but higher effort will be required. With the ignition switched off some electrical circuits, warning lamps and indicators may also be off.

1. Press and hold the button for at least one second or press it three times within two seconds.
2. Move the transmission selector lever to position N and use the brakes to bring your vehicle to a safe stop.
3. When your vehicle has stopped, move the transmission selector lever to position P or N and switch the ignition off.

STEERING WHEEL LOCK

WARNING

Always check that the steering is unlocked before attempting to move your vehicle.

To lock the steering wheel:

1. Remove the key from the ignition switch.
2. Rotate the steering wheel slightly to engage the lock.

To unlock the steering wheel:

1. Insert the key in the ignition switch.
2. Turn the key to position **I**.

Note: *You may need to rotate the steering wheel slightly to assist unlocking if there is a steering wheel load applied.*

STEERING WHEEL LOCK - VEHICLES WITH: KEYLESS VEHICLE SYSTEM

Your vehicle has an electronically controlled steering wheel lock that operates automatically.

The system will lock the steering wheel after a short period of time once you have parked your vehicle and the passive key is outside your vehicle, or when you lock your vehicle.

Note: *The system will not lock the steering wheel when the ignition is on or while your vehicle is moving.*

Unlocking the Steering Wheel

Switch the ignition on to unlock the steering wheel.

Note: *You may have to rotate the steering wheel slightly to assist unlocking.*

Fiesta (CCN) Vehicles Built From: 12-01-2015 Vehicles Built Up To: 14-10-2015, CG3582en enGBR, Edition date: 12/2014, First Printing

STARTING A GASOLINE ENGINE

Note: *You can only operate the starter for a limited period of time, for example 10 seconds. The number of start attempts is limited to approximately six. If you exceed this limit, the system will not allow you to try again until a period of time has elapsed, for example 30 minutes.*

Cold or Hot Engine

Vehicles with Manual Transmission

Note: *Do not touch the accelerator pedal.*

Note: *Releasing the clutch pedal while the engine is starting will stop the engine cranking and return to ignition on.*

1. Fully depress the clutch pedal.
2. Start the engine.

Vehicles with Automatic Transmission

Note: *Do not touch the accelerator pedal.*

1. Move the transmission selector lever to position **P** or **N**.
2. Start the engine.

All Vehicles

If the engine does not start within 10 seconds, wait for a short period and try again.

If the engine does not start after three attempts, wait 10 seconds and follow the flooded engine procedure.

If you have difficulty starting the engine when the temperature is below -13ºF (-25ºC), press the accelerator pedal to the mid-way point of its travel and try again.

Flooded Engine

Vehicles with Manual Transmission

1. Fully depress the clutch pedal.
2. Fully depress the accelerator pedal and hold it there.
3. Start the engine.

Vehicles with Automatic Transmission

1. Move the transmission selector lever to position **P** or **N**.
2. Fully depress the accelerator pedal and hold it there.
3. Start the engine.

All Vehicles

If the engine does not start, repeat the cold or hot engine procedure.

Engine Idle Speed after Starting

The speed at which the engine idles immediately after starting is optimized to minimize vehicle emissions and maximize cabin comfort and fuel economy.

The idle speed will vary depending on certain factors. These include vehicle component and ambient temperatures as well as electrical and climate system demands.

Failure to Start

Vehicles with Manual Transmission

If the engine does not crank when the clutch pedal has been fully depressed and the ignition key is turned to position **III**.

1. Fully depress the clutch and brake pedals.
2. Turn the key to position **III** until the engine has started.

Fiesta (CCN) Vehicles Built From: 12-01-2015 Vehicles Built Up To: 14-10-2015, CG3582en enGBR, Edition date: 12/2014, First Printing

STARTING A DIESEL ENGINE

Cold or Hot Engine

All Vehicles

Note: *When the temperature is below 5ºF (-15ºC), you may need to crank the engine for up to 10 seconds.*

Note: *You can only operate the starter for a limited period of time.*

Note: *After a limited number of attempts to start your engine, the system will not allow you to try again until a period of time has elapsed, for example 30 minutes.*

Switch the ignition on and wait until the glow plug indicator goes off.

Vehicles With Manual Transmission

Note: *Do not touch the accelerator pedal.*

Note: *Releasing the clutch pedal while the engine is starting will stop the engine cranking and return to ignition on.*

1. Fully depress the clutch pedal.
2. Start the engine.

Vehicles With Automatic Transmission

Note: *Do not touch the accelerator pedal.*

Note: *Releasing the brake pedal while the engine is starting will stop the engine cranking and return to ignition on.*

1. Move the transmission selector lever to position **P** or **N**.
2. Fully depress the brake pedal.
3. Start the engine.

Failure to Start

Vehicles With Manual Transmission

If the engine does not crank when the clutch pedal has been fully depressed and the ignition key is turned to position **III**.

1. Fully depress the clutch and brake pedals.
2. Turn the key to position **III** until the engine has started.

DIESEL PARTICULATE FILTER

The filter forms part of the emissions reduction system on your vehicle. It filters harmful diesel particulates (soot) from the exhaust gas.

Regeneration

WARNING

Do not park or idle your vehicle over dry leaves, dry grass or other combustible materials. The regeneration process creates very high exhaust gas temperatures and the exhaust will radiate a considerable amount of heat during and after regeneration and after you have switched the engine off. This is a potential fire hazard.

Note: *Avoid running out of fuel.*

Note: *During regeneration at low speed or engine idle, you may smell a hot metallic odor and could notice a clicking metallic sound. This is due to the high temperatures reached during regeneration and is normal.*

Note: *Changes in the engine or exhaust sound may be heard during the regeneration process.*

Note: *After you have switched your engine off the fans may continue to run for a short period of time.*

Fiesta (CCN) Vehicles Built From: 12-01-2015 Vehicles Built Up To: 14-10-2015, CG3582en enGBR, Edition date: 12/2014, First Printing

The diesel particulate filter on your vehicle requires periodic regeneration to maintain its correct function. Your vehicle will carry out this process automatically.

If your journeys meet one of the following conditions:

- You drive only short distances.
- You frequently switch the ignition on and off.
- Your journeys contain a high level of acceleration and deceleration.

You must carry out occasional trips with the following conditions to assist the regeneration process:

- Drive your vehicle in more favorable conditions, which you will find at higher vehicle speeds in normal driving, on a main road or freeway for a minimum of 20 minutes. This drive may include short stops that will not affect the regeneration process.
- Avoid prolonged idling and always observe speed limits and road conditions.
- Do not switch the ignition off.
- Select a suitable gear to ideally maintain engine speed between 1500 and 3000 RPM.

SWITCHING OFF THE ENGINE

Vehicles With a Turbocharger

WARNING

Do not switch the engine off when it is running at high speed. If you do, the turbocharger will continue running after the engine oil pressure has dropped to zero. This will lead to premature turbocharger bearing wear.

Release the accelerator pedal. Wait until the engine has reached idle speed and then switch it off.

Fiesta (CCN) Vehicles Built From: 12-01-2015 Vehicles Built Up To: 14-10-2015, CG3582en enGBR, Edition date: 12/2014, First Printing

AUTO-START-STOP

Note: *For vehicles with auto-start-stop, the battery requirement is different. It must be replaced by one of exactly the same specification as the original.*

The system reduces fuel consumption and CO2 emissions by shutting down the engine when your vehicle is idling, for example at traffic lights. The engine will automatically restart when you press the clutch pedal or when required by a vehicle system, for example to recharge the battery.

To obtain maximum benefit from the system, move the transmission lever to neutral and release the clutch pedal during any stop of longer than three seconds.

Using Auto-Start-Stop

WARNINGS

The engine may restart automatically if required by the system.

Switch the ignition off before opening the hood or carrying out any maintenance.

Always switch the ignition off before leaving your vehicle, as the system may have shut down the engine but the ignition will still be live.

Note: *The system only operates when the engine is warm and the outside temperature is within the operating temperature limits of the system.*

Note: *If you stall the engine, and then press the clutch pedal within a short period of time, the system will automatically restart the engine.*

Note: *The auto-start-stop indicator will illuminate green when the engine shuts down. See* ***Warning Lamps and Indicators*** *(page 62).*

Note: *When the auto-start-stop indicator flashes amber, shift into neutral or press the clutch pedal.*

Note: *If the system detects a malfunction, it will switch off. Have your vehicle checked by an authorized dealer.*

Note: *When you switch the system off, the switch will illuminate.*

Note: *The system automatically turns on every time you switch the ignition on. To switch the system off, press the switch in the instrument panel. The system will only be switched off for the current ignition cycle. To turn it on, press the switch again. For item location: See* ***At a Glance*** *(page 9).*

To Stop the Engine

1. Stop your vehicle.
2. Shift into neutral.
3. Release the clutch pedal.
4. Release the accelerator pedal.

The system may not shut down the engine under certain conditions, for example:

- To maintain the interior climate.
- Low battery voltage.
- The outside temperature is too low or too high.
- The driver door has been opened.
- Low engine operating temperature.
- Low brake system vacuum.
- If a road speed of 3 mph (5 km/h) has not been exceeded.
- The driver safety belt has not been fastened.

To Re-Start the Engine

Note: *The transmission must be in neutral.*

Press the clutch pedal.

Fiesta (CCN) Vehicles Built From: 12-01-2015 Vehicles Built Up To: 14-10-2015, CG3582en enGBR, Edition date: 12/2014, First Printing

The system may automatically restart the engine under certain conditions, for example:

- Low battery voltage.
- To maintain the interior climate.

Fiesta (CCN) Vehicles Built From: 12-01-2015 Vehicles Built Up To: 14-10-2015, CG3582en enGBR, Edition date: 12/2014, First Printing

SAFETY PRECAUTIONS

WARNINGS

Do not overfill the fuel tank. The pressure in an overfilled tank may cause leakage and lead to fuel spray and fire.

The fuel system may be under pressure. If you hear a hissing sound near the fuel filler door (Easy Fuel capless fuel system), do not refuel until the sound stops. Otherwise, fuel may spray out, which could cause serious personal injury.

Automotive fuels can cause serious injury or death if misused or mishandled.

Flow of fuel through a fuel pump nozzle can produce static electricity. This can cause a fire if you are filling an ungrounded fuel container.

Fuel ethanol and gasoline may contain benzene, which is a cancer-causing agent.

When refueling always shut the engine off and never allow sparks or open flames near the filler neck. Never smoke or use a cell phone while refueling. Fuel vapor is extremely hazardous under certain conditions. Avoid inhaling excess fumes.

Observe the following guidelines when handling automotive fuel:

- Extinguish all smoking materials and any open flames before refueling your vehicle.
- Always turn off the vehicle before refueling.
- Automotive fuels can be harmful or fatal if swallowed. Fuel such as gasoline is highly toxic and if swallowed can cause death or permanent injury. If fuel is swallowed, call a physician immediately, even if no symptoms are immediately apparent. The toxic effects of fuel may not be visible for hours.
- Avoid inhaling fuel vapors. Inhaling too much fuel vapor of any kind can lead to eye and respiratory tract irritation. In severe cases, excessive or prolonged breathing of fuel vapor can cause serious illness and permanent injury.
- Avoid getting fuel liquid in your eyes. If fuel is splashed in the eyes, remove contact lenses (if worn), flush with water for 15 minutes and seek medical attention. Failure to seek proper medical attention could lead to permanent injury.
- Fuels can also be harmful if absorbed through the skin. If fuel is splashed on the skin, clothing or both, promptly remove contaminated clothing and wash skin thoroughly with soap and water. Repeated or prolonged skin contact with fuel liquid or vapor causes skin irritation.
- Be particularly careful if you are taking “Antabuse” or other forms of disulfiram for the treatment of alcoholism. Breathing gasoline vapors, or skin contact could cause an adverse reaction. In sensitive individuals, serious personal injury or sickness may result. If fuel is splashed on the skin, promptly wash skin thoroughly with soap and water. Consult a physician immediately if you experience an adverse reaction.

Fiesta (CCN) Vehicles Built From: 12-01-2015 Vehicles Built Up To: 14-10-2015, CG3582en enGBR, Edition date: 12/2014, First Printing

FUEL QUALITY - GASOLINE

WARNINGS

Do not mix gasoline with oil, diesel or other liquids. This could cause a chemical reaction.

Do not use leaded gasoline or gasoline with additives containing other metallic compounds (e.g. manganese-based). They could damage the emission system.

Note: *We recommend that you use only high quality fuel.*

Note: *We do not recommend the use of additional additives or other engine treatments for normal vehicle use.*

Use minimum 95 octane unleaded gasoline that meets the specification defined by EN 228 or the equivalent national specification.

Your vehicle is suitable for use with ethanol blends up to 10% (E5 and E10).

Long-Term Storage

Most gasoline contains ethanol. We recommend that you fill the fuel tank with fuel that does not contain ethanol if you intend to store your vehicle for more than two months. Alternatively, we recommend that you seek advice from an authorized dealer.

FUEL QUALITY - DIESEL

WARNINGS

Do not mix diesel with oil, gasoline or other liquids. This could cause a chemical reaction.

Do not add kerosene, paraffin or gasoline to diesel. This could cause damage to the fuel system.

WARNINGS

Use diesel that meets the specification defined by EN 590 or the relevant national specification.

Note: *We recommend that you use only high quality fuel.*

Note: *We do not recommend the use of additional additives or other engine treatments for normal vehicle use.*

Note: *We do not recommend the use of additional additives to prevent fuel waxing.*

Long-Term Storage

Most diesel fuels contain biodiesel. We recommend that you fill the fuel tank with fuel that does not contain biodiesel if you intend to store your vehicle for more than two months. Alternatively, we recommend that you seek advice from your dealer.

RUNNING OUT OF FUEL

Avoid running out of fuel. This may have an adverse effect on powertrain components.

If your vehicle runs out of fuel:

- Normally, adding 1 gal (4.6 L) of fuel is enough to restart the engine. If your vehicle is out of fuel and on a steep grade, more fuel may be required.
- When restarting, cranking time takes a few seconds longer than normal. You may need to switch the ignition from off to on several times after refueling to allow the fuel system to pump the fuel from the tank to the engine.
  - Vehicles with keyless ignition, just restart the engine. Engine cranking time will take a few seconds longer than normal.

Fiesta (CCN) Vehicles Built From: 12-01-2015 Vehicles Built Up To: 14-10-2015, CG3582en enGBR, Edition date: 12/2014, First Printing

Adding Fuel From a Portable Fuel Container

WARNINGS

Do not insert the nozzle of a fuel container or an aftermarket funnel into the fuel filler neck. This may damage the fuel system filler neck or its seal and cause fuel to run onto the ground.

Do not try to pry open or push open the capless fuel system with foreign objects. This could damage the fuel system and its seal and cause injury to you or others.

When refueling the vehicle fuel tank from a fuel container, use the plastic funnel included with your vehicle.

Note: *Do not use aftermarket funnels as they will not work with the capless fuel system and can damage it.*

Use the following guidelines to avoid electrostatic charge build-up when filling an ungrounded fuel container:

- Only use an approved fuel container to transfer fuel to your vehicle.
- Place the fuel container on the ground.
- Do not fill a fuel container when it is inside your vehicle (including the cargo area).
- Keep the fuel pump nozzle in contact with the fuel container when filling it.
- Do not use a device that holds the fuel pump nozzle lever in the fill position.

E142668

The plastic funnel is in the spare wheel stowage tray.

1. Insert the plastic funnel into the fuel tank filler pipe opening.
2. Add fuel to your vehicle from an approved fuel container.
3. Remove the plastic funnel from the fuel tank filler pipe opening.
4. Clean the plastic funnel and place it back in your vehicle or properly dispose of it.

Note: *Extra funnels can be purchased from an authorized dealer if you choose to dispose of the funnel.*

CATALYTIC CONVERTER

WARNING

Do not park or idle your vehicle over dry leaves, dry grass or other combustible materials. The exhaust will radiate a considerable amount of heat during use, and after you have switched the engine off. This is a potential fire hazard.

Driving with a Catalytic Converter

WARNINGS

Avoid running out of fuel.

Fiesta (CCN) Vehicles Built From: 12-01-2015 Vehicles Built Up To: 14-10-2015, CG3582en enGBR, Edition date: 12/2014, First Printing

WARNINGS

Do not crank the engine for long periods.

Do not run the engine when a spark plug lead is disconnected.

Do not push-start or tow-start your vehicle. Use booster cables. See **Jump Starting the Vehicle** (page 138).

Do not switch the ignition off when driving.

REFUELING

WARNINGS

Do not attempt to start the engine if you have filled the fuel tank with the incorrect fuel. This could damage the engine. Have the system checked by an authorized dealer immediately.

Do not use any kind of flames or heat near the fuel system. The fuel system is under pressure. There is a risk of injury if the fuel system is leaking.

If you use a high pressure spray to wash your vehicle, only spray the fuel filler flap briefly from a distance not less than 8 inches (200 millimeters).

We recommend that you wait at least 10 seconds before removing the fuel pipe nozzle to allow any residual fuel to drain into the fuel tank.

Stop refueling after the fuel nozzle stops the second time. Additional fuel will fill the expansion space in the fuel tank which could lead to fuel overflowing. Fuel spillage could be hazardous to other road users.

Do not remove the nozzle from its fully inserted position during the entire refueling process.

Note: *Your vehicle does not have a fuel filler cap.*

E140041

1. Open the flap fully until it engages.

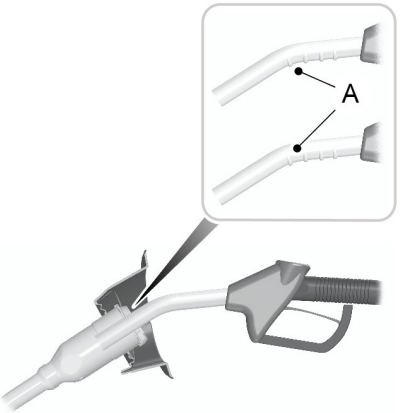

E139202

Note: *When you insert the correct size fuel nozzle, a spring loaded inhibitor will open. This helps to avoid filling up with the wrong fuel.*

2. Insert the fuel nozzle up to and including the first notch on the nozzle A. Keep it resting on the cover of the fuel pipe opening.

Fiesta (CCN) Vehicles Built From: 12-01-2015 Vehicles Built Up To: 14-10-2015, CG3582en enGBR, Edition date: 12/2014, First Printing

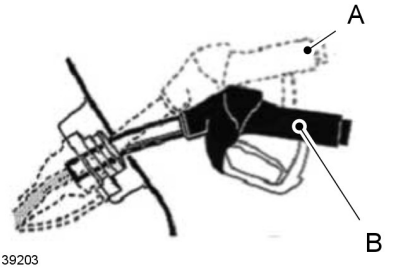

E139203

3. Hold the nozzle in position B during refilling. Holding the nozzle in position A may affect the flow of fuel and shut off the fuel nozzle before the fuel tank is full.

E140042

4. Operate the nozzle within the area shown.

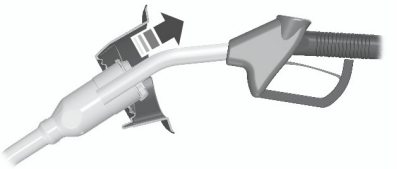

E119081

5. Slightly raise the fuel nozzle to remove it.

FUEL CONSUMPTION

We derive CO2 and fuel consumption figures in laboratory tests according to Regulation (EC) 715/2007 or CR (EC) 692/2008 and subsequent amendments.

They are intended as a comparison between makes and models of vehicles. They are not intended to represent the real world fuel consumption you may get from your vehicle.

Real world fuel consumption is governed by many factors, for example driving style, high speed driving, stop-start driving, air conditioning usage, the accessories fitted, payload and towing.

The advertised capacity is the indicated capacity and the empty reserve combined. Indicated capacity is the difference in the amount of fuel in the fuel tank and when the fuel gauge indicates empty. Empty reserve is the amount of fuel in the fuel tank after the fuel gauge indicates empty.

Note: *The amount of fuel in the empty reserve varies and should not be relied upon to increase driving range. When refueling your vehicle after the fuel gauge indicates empty, you might not be able to refuel the full amount of the advertised capacity due to the empty reserve still present in the fuel tank.*

Filling the Fuel Tank

For consistent results when refueling:

- Switch the ignition off.
- Allow no more than two automatic shut-offs when refueling.

Results are most accurate when the refueling method is consistent.

Fiesta (CCN) Vehicles Built From: 12-01-2015 Vehicles Built Up To: 14-10-2015, CG3582en enGBR, Edition date: 12/2014, First Printing

Calculating Fuel Economy

Do not measure fuel economy during the first 1,000 mi (1,600 km) of driving (this is the engine break-in period). A more accurate measurement is obtained after 2,500 mi (4,000 km). Also, fuel expense, frequency of fill ups or fuel gauge readings are not accurate ways to measure fuel economy.

1. Fill the fuel tank completely and record the initial odometer reading.
2. Each time you fill the fuel tank, record the amount of fuel added.
3. After at least three fill ups, fill the fuel tank and record the current odometer reading.
4. Subtract your initial odometer reading from the current odometer reading.
5. Calculate fuel economy by dividing miles traveled by gallons used (For Metric: Multiply liters used by 100, then divide by kilometers traveled).

Keep a record for at least one month and record the type of driving (city or freeway). This provides an accurate estimate of your vehicle's fuel economy under current driving conditions. Additionally, keeping records during summer and winter show how temperature impacts fuel economy. In general, your vehicle will use more fuel in cold temperatures.

TECHNICAL SPECIFICATIONS

Fuel Consumption Figures

Variant	Urban	Extra-Urban	Combined	CO2 Emissions
	l/100 km (mpg)	l/100 km (mpg)	l/100 km (mpg)	g/km
1.0L EcoBoost	5.1-6.6 (42.8-52.3)	3.7-3.9 (72.4-76.3)	4.3-4.9 (57.6-65.7)	99-114
1.25L Duratec-16V	6.8-6.9 (40.9-41.5)	4.2-4.3 (65.7-67.2)	5.2 (54.3)	120-122
1.4L Duratec-16V	7.6 (37.2)	4.5-4.7 (60.1-62.7)	5.7-5.8 (48.7-49.5)	130-133
1.6L EcoBoost	7.9 (35.7)	4.8 (58.8)	5.9 (47.8)	138
1.6L Duratec-16V Ti-VCT	8.4 (33.6)	4.5 (62.7)	5.9 (47.8)	138
1.5L Duratorq-TDCi	3.4-4.4 (64.2-83.1)	3-3.3 (85.6-94.1)	3.2-3.7 (76.3-88.2)	82-98
1.6L Duratorq-TDCi	3.7-4.4 (64.2-76.3)	3.1-3.2 (88.2-91.1)	3.3-3.6 (78.5-85.6)	85-95

Fiesta (CCN) Vehicles Built From: 12-01-2015 Vehicles Built Up To: 14-10-2015, CG3582en enGBR, Edition date: 12/2014, First Printing

MANUAL TRANSMISSION

Selecting Reverse Gear

Do not engage reverse gear when your vehicle is moving. This can cause damage to the transmission.

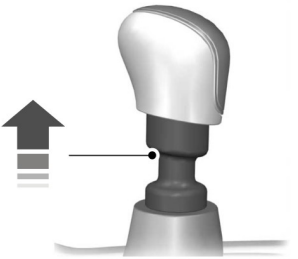

E99067

On some vehicles it is necessary to raise the collar when you select reverse gear.

AUTOMATIC TRANSMISSION

WARNINGS

Always set the parking brake fully and make sure you move the transmission selector lever to position **P**. Switch the ignition off and remove the key whenever you leave your vehicle.

Do not apply the brake pedal and accelerator pedal simultaneously. Applying both pedals simultaneously for more than three seconds will limit engine rpm, which may result in difficulty maintaining speed in traffic and could lead to serious injury.

Note: *The system performs a series of checks when you switch the ignition off. You may hear a slight clicking sound. This is normal.*

Selector Lever Positions

E161746

P	Park
R	Reverse
N	Neutral
D	Drive
S	Sport mode and manual shifting
+	Manual shift up
-	Manual shift down

WARNING

Apply the brakes before moving the transmission selector lever and keep them applied until you are ready to move off.

Press the button on the transmission selector lever to change to each position.

The transmission selector lever position will be shown in the information display.

P (Park)

WARNINGS

Move the transmission selector lever to park only when your vehicle is stationary.

Fiesta (CCN) Vehicles Built From: 12-01-2015 Vehicles Built Up To: 14-10-2015, CG3582en enGBR, Edition date: 12/2014, First Printing

WARNINGS

Apply the parking brake and move the transmission selector lever to park before leaving your vehicle. Make sure that the transmission selector lever is latched in position.

Note: *An audible warning will sound if you open the driver's door and you have not moved the transmission selector lever to park.*

In this position, power is not transmitted to the drive wheels and the transmission is locked. You can start the engine with the transmission selector lever in this position.

R (Reverse)

WARNINGS

Move the transmission selector lever to reverse only when your vehicle is stationary and the engine is at idle speed.

Always come to a complete stop before shifting the transmission selector lever out of reverse.

Move the transmission selector lever to reverse to allow your vehicle to move backward.

N (Neutral)

In this position, power is not transmitted to the drive wheels but the transmission is not locked. You can start the engine with the transmission selector lever in this position.

D (Drive)

Note: *A shift will occur only when your vehicle speed and the engine speed are appropriate.*

Note: *You may temporarily override the current gear selected using the **+** and **-** buttons.*

Select drive to shift automatically through the forward gears.

The transmission will select the appropriate gear for optimum performance based on ambient temperature, road gradient, vehicle load and your input.

Sport Mode and Manual Shifting

Sport Mode

Note: *In sport mode the transmission operates as normal but gears are selected more quickly and at higher engine speeds.*

Note: *In sport mode **S** will be shown in the information display.*

Switch on sport mode by moving the transmission selector lever to position **S**. Sport mode will remain on until either you shift manually up or down the gears using **+** and **-** or move the transmission selector lever to position **D**.

Manual Shifting

WARNINGS

Do not hold the buttons permanently in **-** or **+**.

The transmission will automatically downshift when the engine speed is too low.

Press the **-** button to shift down and press the **+** button to shift up.

Gears may be skipped by pressing the buttons repeatedly at short intervals.

Manual mode also provides a kickdown function. See Kickdown.

Fiesta (CCN) Vehicles Built From: 12-01-2015 Vehicles Built Up To: 14-10-2015, CG3582en enGBR, Edition date: 12/2014, First Printing

Hints on Driving With an Automatic Transmission

WARNING

Do not idle the engine for long periods of time in drive with the brakes applied.

Moving Off

1. Release the parking brake.
2. Release the brake pedal and press the accelerator pedal.

Stopping

1. Release the accelerator pedal and press the brake pedal.
2. Apply the parking brake.
3. Move the transmission selector lever to **N** or **P**.

Kickdown

Press the accelerator pedal fully with the transmission selector lever in the drive position to select the next lowest gear for optimum performance. Release the accelerator pedal when you no longer require kickdown.

If Your Vehicle Gets Stuck In Mud or Snow

Note: *Do not rock your vehicle if the engine is not at normal operating temperature or damage to the transmission may occur.*

Note: *Do not rock your vehicle for more than a minute or damage to the transmission and tires may occur, or the engine may overheat.*

If your vehicle gets stuck in mud or snow, it may be rocked out by shifting between forward and reverse gears, stopping between shifts in a steady pattern. Press lightly on the accelerator in each gear.

Emergency Park Position Release Lever

WARNINGS

Do not drive your vehicle until you verify that the brake lamps are working.

If the parking brake is fully released, but the brake warning lamp remains illuminated, the brakes may not be working correctly. See an authorized dealer.

Use the lever to move the transmission selector lever from the park position in the event of an electrical malfunction or if your vehicle battery has no charge.

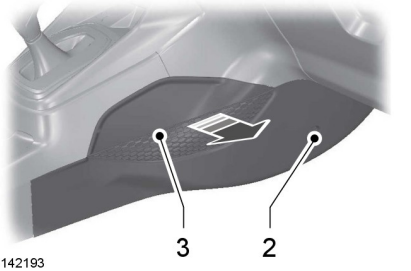

E142193

1. Apply the parking brake and switch the ignition off before performing this procedure.
2. Remove the retaining screw.
3. Remove the center console side panel.

Fiesta (CCN) Vehicles Built From: 12-01-2015 Vehicles Built Up To: 14-10-2015, CG3582en enGBR, Edition date: 12/2014, First Printing

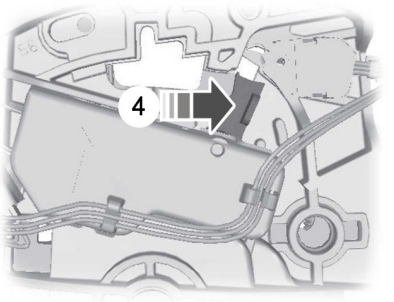

E142214

Note: *The lever is pink.*

4. Apply the brake pedal. Using a suitable tool rotate the lever forward while pulling the transmission selector lever out of the park position and into the neutral position.

Note: *See an authorized dealer as soon as possible if this procedure is used.*

HILL START ASSIST (If Equipped)

WARNINGS

The system does not replace the parking brake. When you leave your vehicle, always apply the parking brake and move the transmission selector lever into position **P** (Park).

You must remain in your vehicle once you have activated the system.

During all times, you are responsible for controlling your vehicle, supervising the system and intervening, if required.

If the engine is revved excessively, or if a malfunction is detected, the system will be deactivated.

The system makes it easier to pull away when your vehicle is on a slope without the need to use the parking brake.

When the system is active, your vehicle will remain stationary on the slope for two to three seconds after you release the brake pedal. This allows you time to move your foot from the brake to the accelerator pedal. The brakes are released automatically once the engine has developed sufficient drive to prevent your vehicle from rolling down the slope. This is an advantage when pulling away on a slope, (for example from a car park ramp, traffic lights or when reversing uphill into a parking space).

The system will activate automatically on any slope which can result in significant vehicle rollback.

Using Hill Start Assist

1. Press the brake pedal to bring your vehicle to a complete standstill. Keep the brake pedal pressed.
2. If the sensors detect that your vehicle is on a slope, the system will be activated automatically.
3. When you remove your foot from the brake pedal, your vehicle will remain on the slope without rolling away for approximately two or three seconds. This hold time will automatically be extended if you are in the process of driving off.
4. Drive off in the normal manner. The brakes will be released automatically.

Switching the System On and Off

Note: *The system can only be switched on and off for manual transmissions.*

Note: *Once you have switched off the system, it will remain off until you switch it on again.*

Fiesta (CCN) Vehicles Built From: 12-01-2015 Vehicles Built Up To: 14-10-2015, CG3582en enGBR, Edition date: 12/2014, First Printing

Your vehicle comes with the system already enabled. If desired, you can disable the feature: See (page 66).

Fiesta (CCN) Vehicles Built From: 12-01-2015 Vehicles Built Up To: 14-10-2015, CG3582en enGBR, Edition date: 12/2014, First Printing

GENERAL INFORMATION

WARNING

The system does not relieve you of your responsibility to drive with due care and attention.

Note: *Occasional brake noise is normal. If a metal-to-metal, continuous grinding or continuous squeal sound is present, the brake linings may be worn-out. If the vehicle has continuous vibration or shudder in the steering wheel while braking, have your vehicle checked by an authorized dealer.*

Note: *Brake dust may accumulate on the wheels, even under normal driving conditions. Some dust is inevitable as the brakes wear. See* ***Cleaning the Alloy Wheels*** *(page 181).*

Wet brakes result in reduced braking efficiency. Gently press the brake pedal a few times when driving from a car wash or standing water to dry the brakes.

Emergency Brake Assist

Emergency brake assist detects when you brake heavily by measuring the rate at which you press the brake pedal. It provides maximum braking efficiency as long as you press the pedal. Emergency brake assist can reduce stopping distances in critical situations.

Anti-lock Brake System

This system helps you maintain steering control and vehicle stability during emergency stops by keeping the brakes from locking.

HINTS ON DRIVING WITH ANTI-LOCK BRAKES

Note: *When the system is operating, the brake pedal will pulse and may travel further. Maintain pressure on the brake pedal. You may also hear a noise from the system. This is normal.*

The anti-lock braking system will not eliminate the risks when:

- You drive too closely to the vehicle in front of you.
- Your vehicle is hydroplaning.
- You take corners too fast.
- The road surface is poor.

PARKING BRAKE

Vehicles With Automatic Transmission

WARNING

Always set the parking brake fully and leave your vehicle with the transmission selector lever in position P.

Note: *If you park your vehicle on a hill and facing uphill move the transmission selector lever to position P and turn the steering wheel away from the curb.*

Note: *If you park your vehicle on a hill and facing downhill move the transmission selector lever to position P and turn the steering wheel toward the curb.*

Vehicles With Manual Transmission

WARNING

Always set the parking brake fully.

Fiesta (CCN) Vehicles Built From: 12-01-2015 Vehicles Built Up To: 14-10-2015, CG3582en enGBR, Edition date: 12/2014, First Printing

Note: *If you park your vehicle on a hill and facing uphill select first gear and turn the steering wheel away from the curb.*

Note: *If you park your vehicle on a hill and facing downhill select reverse gear and turn the steering wheel toward the curb.*

All Vehicles

Note: *Do not press the release button while pulling the lever up.*

To apply the parking brake:

1. Press the foot brake pedal firmly.
2. Pull the parking brake lever up to its fullest extent.

To release the parking brake:

1. Press the brake pedal firmly.
2. Pull the lever up slightly.
3. Press the release button and push the lever down.

Fiesta (CCN) Vehicles Built From: 12-01-2015 Vehicles Built Up To: 14-10-2015, CG3582en enGBR, Edition date: 12/2014, First Printing

PRINCIPLE OF OPERATION

Electronic Stability Program

WARNING

The system does not relieve you of your responsibility to drive with due care and attention. Failure to do so could result in loss of vehicle control, personal injury or death.

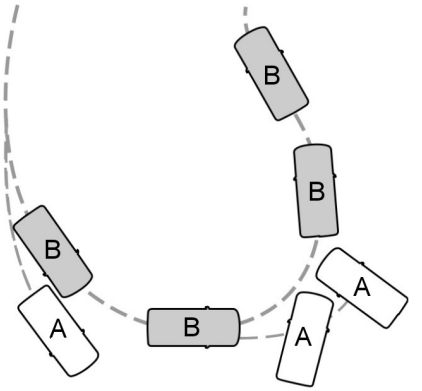

E72903

A Without ESP

B With ESP

The system supports stability when your vehicle starts to slide away from your intended path. The system performs this by braking individual wheels and reducing engine torque as required.

The system also provides an enhanced traction control function by reducing engine torque if the wheels spin when you accelerate. This improves your ability to pull away on slippery roads or loose surfaces, and improves comfort by limiting wheel spin in hairpin bends.

Stability Control Warning Lamp

While driving, it flashes when the system is operating. See **Warning Lamps and Indicators** (page 59).

USING STABILITY CONTROL

Note: *The system automatically switches on every time you switch the ignition on.*

You can switch the system on and off using the information display. See (page 66).

USING STABILITY CONTROL - 1.6L ECOBOOST™

WARNING

If you switch stability control off, active city stop will also be switched off. Failure to follow this warning could seriously increase the risk of injury or death.

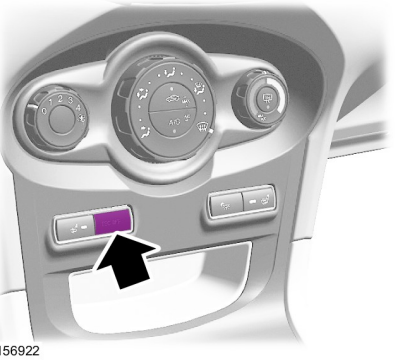

E156922

Note: *The system will switch on automatically every time you switch the ignition on.*

Fiesta (CCN) Vehicles Built From: 12-01-2015 Vehicles Built Up To: 14-10-2015, CG3582en enGBR, Edition date: 12/2014, First Printing

Note: *You can also switch the system off and on using the information display. See* ***Information Displays*** *(page 66).*

Switching Sport Mode On

Press the switch. It will illuminate and a message will be displayed in the information display. Press the switch again to return the system to normal mode.

Note: *In this mode stability control is only reduced and not switched off completely.*

Switching the System Off

Press and hold the switch for approximately five seconds. It will illuminate and a message will be displayed in the information display. Press the switch again to return the system to normal mode.

Fiesta (CCN) Vehicles Built From: 12-01-2015 Vehicles Built Up To: 14-10-2015, CG3582en enGBR, Edition date: 12/2014, First Printing

PRINCIPLE OF OPERATION

WARNINGS

The system does not relieve you of your responsibility to drive with due care and attention.

If your vehicles has a non-Ford approved trailer tow module the system may not correctly detect objects.

The sensors may not detect objects in heavy rain or other conditions that cause disruptive reflections.

The sensors may not detect objects with surfaces that absorb ultrasonic waves.

The system does not detect objects that are moving away from your vehicle. They will only be detected shortly after they start to move toward your vehicle.

Take particular care when reversing with a tow ball arm or a rear fitted accessory. For example, a bicycle carrier. The rear parking aid will only indicate the approximate distance from the rear bumper to an object.

If you use a high pressure spray to wash your vehicle, only spray the sensors briefly from a distance not less than eight inches (20 centimeters).

Note: *If your vehicle has a tow ball arm, the system is turned off automatically when trailer lamps (or lighting boards) are connected to the 13-pin socket through a Ford approved trailer tow module.*

Note: *Keep the sensors free from dirt, ice or snow. Do not clean with sharp objects.*

Note: *The system may emit false alerts if it detects a signal using the same frequency as the sensors or if your vehicle is fully loaded.*

Note: *The outer sensors may detect the side walls of a garage. If the distance between the outer sensors and the side wall remains constant for three seconds, the alert will turn off. As you continue the inner sensors will detect objects directly behind your vehicle.*

PARKING AID

WARNINGS

Sensing is only an aid to detect some objects when moving forward or backward at low speeds. Traffic control systems, inclement weather or an external motor and fan can affect the sensors; this may include reduced performance or false activation. To help avoid personal injury you must read and understand the limitations of the system detailed in this section.

The parking aid system may not prevent contact with small or moving objects that are close to the ground. The parking aid system gives an audible warning when it detects a large object helping to avoid damage to your vehicle. To help avoid personal injury you must take care when using the parking aid system.

Note: *Some add-on equipment can cause reduced performance or false activation. For example, large trailer hitches, bike or surfboard racks.*

Note: *The parking aid system sensors must be kept clean and free from snow or ice to avoid reduced performance or false activation. Do not clean the sensors with sharp objects.*

Note: *If the parking aid sensors are misaligned due to vehicle bumper damage it will cause reduced performance or false activation.*

Fiesta (CCN) Vehicles Built From: 12-01-2015 Vehicles Built Up To: 14-10-2015, CG3582en enGBR, Edition date: 12/2014, First Printing

The parking aid system gives an audible warning and reduces the radio volume when it detects a large object within a limited range of your vehicle's bumpers.

Note: *When the parking aid system no longer detects a large object the radio volume will return to the previous level.*

Rear Sensing System

The rear parking aid sensors turn on automatically when you move the transmission selector lever to **R** (reverse) and your vehicle is moving at a speed of less than 3 mph (5 km/h). Moving your vehicle closer to a large object will increase the audible warning repeat rate. When the object is less than 12 inches (30 centimeters) from the center of your vehicle's rear bumper the audible warning will sound continuously. If the object is more than 12 inches (30 centimeters) from the side of your vehicle's rear bumper the audible warning will sound for three seconds. If the object is less than 12 inches (30 centimeters) from the side of your vehicle's rear bumper the audible warning will sound continuously.

E130178

A The rear parking aid sensor coverage area is up to 72 inches (183 centimeters) from the center of your vehicle's rear bumper. There is a decreased coverage area at the outer corners.

The system detects large objects when you move the transmission selector lever to **R** (reverse):

- and your vehicle is moving toward the object at a speed of less than 3 mph (5 km/h)
- and your vehicle is not moving but a moving object is approaching the rear of your vehicle at a speed of less than 3 mph (5 km/h)
- and your vehicle is moving at a speed of less than 3 mph (5 km/h) and a moving object is approaching the rear of your vehicle at a speed of less than 3 mph (5 km/h).

Move the transmission selector lever from **R** (reverse) or press the parking aid button to switch the system off. If a fault is present in the system, a warning message appears in the information display and does not allow you to switch the system on.

Fiesta (CCN) Vehicles Built From: 12-01-2015 Vehicles Built Up To: 14-10-2015, CG3582en enGBR, Edition date: 12/2014, First Printing

Front and Rear Sensing System

The front and rear parking aid sensors turn on automatically when you move the transmission selector lever to **R** (reverse), **D** (drive) or **L** (low) and your vehicle is moving at a speed of less than 7 mph (12 km/h).

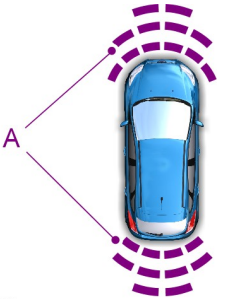

E130382

A The front parking aid sensor coverage area is up to 31 inches (80 centimeters) from the center of your vehicle's front bumper and up to 14 inches (35 centimeters) to the side of your vehicle's front bumper. The rear parking aid sensor coverage area is up to 72 inches (183 centimeters) from the center of your vehicle's rear bumper. There is a decreased coverage area at the outer corners.

Audible warnings will sound when large objects are within the sensor coverage areas of either bumper in the following manner:

- You will hear a high-pitched tone from the front audio system speakers when large objects are within the sensor coverage area of your vehicle's front bumper. Moving your vehicle closer to a large object will increase the audible warning repeat rate.
- You will hear a lower-pitched tone from the rear audio system speakers when large objects are within the sensor coverage area of your vehicle's rear bumper. Moving your vehicle closer to a large object will increase the audible warning repeat rate.
- The parking aid system prioritises audible warnings based on large objects that are the closest to your vehicle's front or rear bumper. For example, if an object is 24 inches (60 centimeters) from your vehicle's front bumper and at the same time, an object is only 16 inches (40 centimeters) from your vehicle's rear bumper, you will hear the lower-pitched tone from the rear audio system speakers.
- You will hear an alternating audible warning from the front and rear audio system speakers if large objects are less than 12 inches (30 centimeters) from your vehicle's front and rear bumpers.
- If the object is more than 12 inches (30 centimeters) from the side of your vehicle's bumper area the audible warning will sound for three seconds. If the object is less than 12 inches (30 centimeters) from the side of your vehicle's bumper area the audible warning will sound continuously.

Fiesta (CCN) Vehicles Built From: 12-01-2015 Vehicles Built Up To: 14-10-2015, CG3582en enGBR, Edition date: 12/2014, First Printing

Move the transmission selector lever from **R** (reverse), **D** (drive), **L** (low) or move away from large objects as you drive off, or press the parking aid button to switch the system off. For item location: See **At a Glance** (page 9). If a fault is present in the system, a warning message appears in the information display and does not allow you to switch the system on.

REAR VIEW CAMERA

WARNINGS

The operation of the camera may vary depending on the ambient temperature, vehicle and road conditions.

The distances shown in the display may differ from the actual distance.

Do not place objects in front of the camera.

The camera is on the liftgate or luggage compartment lid.

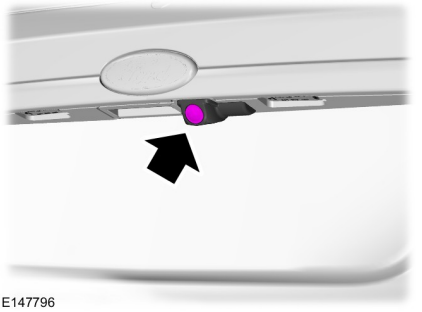

E147796

Turning the Rear View Camera On

WARNING

The camera may not detect objects that are very close to your vehicle.

Switch the ignition and the audio unit on.

Press the parking aid switch in the instrument panel or move the transmission selector lever to position reverse **(R)**. For switch location: See **At a Glance** (page 9).

The image is displayed on the screen.

The lamp in the switch illuminates when the system is switched on.

The camera may not operate correctly in the following conditions:

- Dark areas.
- Intense light.
- If there is a sudden change to the ambient temperature.
- If the camera is wet.
- If the camera is dirty.
- If the camera is obstructed.

Using the Display

WARNINGS

Obstacles above the camera position will not be shown. Inspect the area behind your vehicle if necessary.

Marks are for general guidance only, and are calculated for vehicles in maximum load conditions on an even road surface.

If the vehicle battery is disconnected the guidelines are not fully functional directly after the battery is reconnected. The guidelines become fully functional after you drive your vehicle as straight as possible for five minutes at a minimum speed of 31 mph (50 km/h).

The lines show the distance from the outer edge of the front tire plus 2 in (51 mm) and the rear bumper.

Fiesta (CCN) Vehicles Built From: 12-01-2015 Vehicles Built Up To: 14-10-2015, CG3582en enGBR, Edition date: 12/2014, First Printing

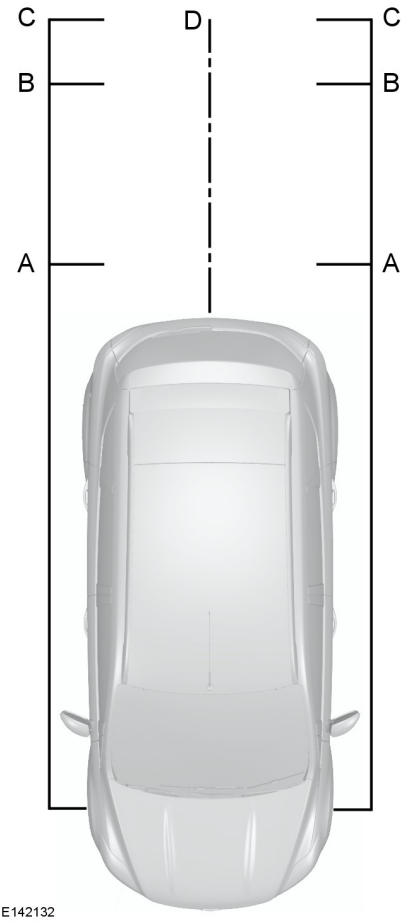

A Red - Zone.

B Amber - Zone.

C Green - Zone.

D Black - center line of the projected vehicle path.

Note: *When reversing with a trailer the camera shows the direction of your vehicle and not the direction of the trailer.*

Note: *If the camera image is not clear, clean the camera lens with a soft cloth.*

Turning the Rear View Camera Off

Press the parking aid switch in the instrument panel or disengage reverse gear. For switch location: See **At a Glance** (page 9).

Note: *The system will automatically turn off once your vehicle speed has reached approximately 7 mph (12 km/h).*

Vehicles with Parking Aid

The display shows colored distance bars. This indicates the approximate distance from the rear bumper to an object.

These are color coded as follows:

- Red - Zone.
- Amber - Zone.
- Green - Zone.

Fiesta (CCN) Vehicles Built From: 12-01-2015 Vehicles Built Up To: 14-10-2015, CG3582en enGBR, Edition date: 12/2014, First Printing

PRINCIPLE OF OPERATION

WARNING

The system does not relieve you of your responsibility to drive with due care and attention.

Cruise control allows you to control your speed using the switches on the steering wheel. You can use cruise control when you exceed approximately 20 mph (30 km/h).

USING CRUISE CONTROL

WARNINGS

Do not use cruise control on winding roads, in heavy traffic or when the road surface is slippery. This could result in loss of vehicle control, serious injury or death.

When you are going downhill, your speed may increase above the set speed. The system will not apply the brakes. Change down a gear to assist the system in maintaining the set speed. Failure to do so could result in loss of vehicle control, serious injury or death.

E102679

The cruise controls are located on the steering wheel.

Note: *Cruise control will disengage if your vehicle speed decreases more than 10 mph (16 km/h) below your set speed while driving uphill.*

Switching Cruise Control On

Press and release **ON**.

Setting the Cruise Speed

1. Accelerate to the desired speed.

2. Press and release **SET+**. The indicator displays in the instrument cluster.
3. Take your foot off the accelerator pedal.

Changing the Set Speed

- Press and hold **SET+** or **SET-**. Release the control when you reach the desired speed.
- Press and release **SET+** or **SET-**. The set speed will change in approximately 1 mph (2 km/h) increments.
- Press the accelerator or brake pedal until you reach the desired speed. Press and release **SET+**.

Canceling the Set Speed

Press and release **CAN**, or tap the brake pedal. The indicator no longer displays in the instrument cluster. The set speed will not be erased.

Note: *For vehicles with manual transmission, depressing the clutch pedal will also cancel the set speed.*

Resuming the Set Speed

Press and release **RES**. The indicator displays in the instrument cluster.

Fiesta (CCN) Vehicles Built From: 12-01-2015 Vehicles Built Up To: 14-10-2015, CG3582en enGBR, Edition date: 12/2014, First Printing

Switching Cruise Control Off

Press and release **OFF** or switch the ignition off.

Note: *You erase the set speed when you switch the system off.*

Fiesta (CCN) Vehicles Built From: 12-01-2015 Vehicles Built Up To: 14-10-2015, CG3582en enGBR, Edition date: 12/2014, First Printing

ACTIVE CITY STOP

General Information

WARNINGS

The system does not relieve you of your responsibility to drive with due care and attention.

At all times you are responsible for controlling your vehicle, supervising the system and intervening if required.

Never look directly into the sensor with any type of object. There is a risk of eye injury.

If the sensor becomes blocked the system may not function.

To achieve full system performance, you must bed the braking system in. See **Breaking-In** (page 136).

The system performance may vary depending on your vehicle and road conditions.

The system will not react to vehicles driving in a different direction.

The system will not react to bicycles, motorcycles, people or animals.

When the ignition is on the sensor will constantly transmit a laser beam.

The system will not operate during harsh acceleration and steering.

In cold and severe weather conditions the system may not function. Rain, snow, spray and ice can all influence the sensor.

Do not carry out windshield repairs in the immediate area surrounding the sensor.

WARNINGS

If you install a windshield not approved by us, the system may not function correctly.

If the engine stops after the system has been switched on, the hazard warning flashers will turn on.

The system may not function when driving around sharp curves.

Note: *Keep the windshield free from obstructions such as bird droppings, insects, snow or ice.*

Note: *Keep the hood free of ice and snow, otherwise the system may not function correctly.*

A sensor is mounted behind the interior rear view mirror. It continuously monitors conditions to decide when to intervene.

The system is designed to help you reduce low speed collisions into the rear of another vehicle. It will also help you reduce the impact damage or potentially avoid the collision completely.

The system operates at speeds below approximately 19 mph (30 km/h) by applying the brakes when the sensor detects that a collision is likely.

You must depress the brake pedal to obtain full braking force.

When the system is braking or has automatically applied the brakes, a message will be shown in the information display.

Using Active City Stop

Switching the System Off and On

Note: *The system automatically turns on every time you switch the ignition on.*

Fiesta (CCN) Vehicles Built From: 12-01-2015 Vehicles Built Up To: 14-10-2015, CG3582en enGBR, Edition date: 12/2014, First Printing

In certain situations it is advisable to disable the system, for example:

- Driving off road when objects may cover the windshield.
- Driving through a car wash facility.

You can switch the system off and on using the information display. See (page 66).

Active City Stop Relearning Procedure

Note: *When you disconnect the battery, the system will go through a relearning procedure. During this time the system will not be available.*

You must drive your vehicle above 31mph (50 km/h) in a straight line for the procedure to complete. This procedure may take several minutes.

Laser Sensor Information

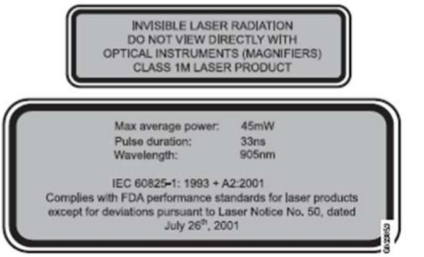

WARNINGS

Invisible laser radiation. Do not view directly with optical instruments (magnifiers). Class 1M laser product.

IEC 60825-1: 1993 + A2:2001. Complies with FDA performance standards for laser products except for deviation pursuant to Laser Notice No. 50, dated July 26th, 2001.

Item	Specification
Max average power	45mW
Pulse duration	33ns
Wavelength	905nm

Fiesta (CCN) Vehicles Built From: 12-01-2015 Vehicles Built Up To: 14-10-2015, CG3582en enGBR, Edition date: 12/2014, First Printing

GENERAL INFORMATION

WARNINGS

Use load securing straps to an approved standard, e.g. DIN.

Make sure that you secure all loose items properly.

Place luggage and other loads as low and as far forward as possible within the luggage or loadspace.

Do not drive with the liftgate or rear door open. Exhaust fumes may enter your vehicle.

Do not exceed the maximum front and rear axle loads for your vehicle. See **Vehicle Identification Plate** (page 199).

Do not allow items to contact the rear windows.

Note: *When loading long objects in to your vehicle, for example pipes, timber or furniture be careful not to damage the interior trim.*

REAR UNDER FLOOR STORAGE (If Equipped)

Adjustable Load Floor

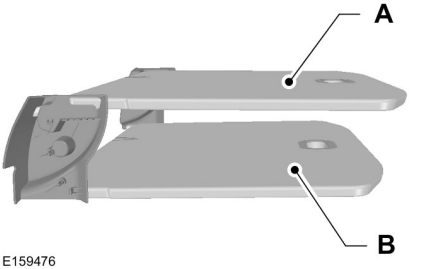

E159476

A Upper position

B Lower position

The load floor can be placed in either position on shelves located at the rear of the luggage compartment trim.

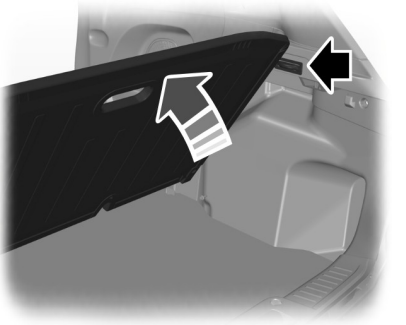

E157606

You can hold the load floor open. Use the stoppers located at the side of the luggage compartment to hold the floor up.

Fiesta (CCN) Vehicles Built From: 12-01-2015 Vehicles Built Up To: 14-10-2015, CG3582en enGBR, Edition date: 12/2014, First Printing

LUGGAGE COVERS

WARNING

Do not place objects on the luggage cover.

Removing the Cover

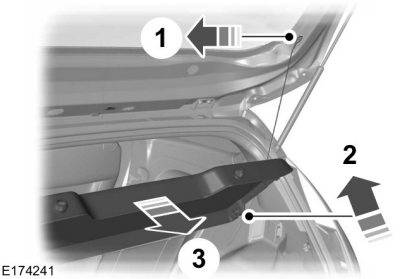

Fiesta (CCN) Vehicles Built From: 12-01-2015 Vehicles Built Up To: 14-10-2015, CG3582en enGBR, Edition date: 12/2014, First Printing

TOWING A TRAILER

WARNINGS

Do not exceed 62 mph (100 km/h). This could result in the loss of vehicle control, serious personal injury or death.

The rear tire pressures must be increased by 3 psi (0.2 bar) above specification. Do not exceed the maximum pressure stated on the tire sidewall. This could cause serious personal injury. See **Wheels and Tires** (page 182).

Do not exceed the maximum gross train weight stated on your vehicle identification plate. This could result in the loss of vehicle control, serious personal injury or death. See **Vehicle Identification Plate** (page 199).

Do not exceed the maximum permissible trailer nose weight (vertical weight on the tow ball) as stated in the vehicle specification chart. This could result in the loss of vehicle control, serious personal injury or death. See **Capacities and Specifications** (page 199).

The anti-lock braking system does not control the overrun brake on the trailer. This could result in the loss of vehicle control, serious personal injury or death.

When towing a trailer:

- Obey country specific regulations for towing a trailer.
- Do not exceed 62 mph (100 km/h) even if a country allows higher speeds under certain conditions.
- Place loads as low as possible and central to the axle of your trailer. If you are towing with an unladen vehicle, the load in your trailer should be placed toward the nose, within the maximum nose load, as this gives the best stability. See **Capacities and Specifications** (page 199).
- The trailer nose weight (vertical weight on the tow ball), is essential for the driving stability of your vehicle and trailer.
- The vertical weight on the tow ball should be at least 4% of the trailer weight and not exceed the maximum permissable weight. See **Capacities and Specifications** (page 199).
- Reduce speed immediately if the trailer shows any sign of swaying.
- Use a low gear when descending a steep downhill gradient.

Note: *The maximum permissible trailer nose weight on the trailer identification plate is the trailer manufacturer's testing value. The vehicle maximum permissible trailer nose weight may be lower.*

The stability of your vehicle to trailer combination is very much dependent on the quality of the trailer.

Towing a trailer changes the vehicle handling characteristics and increases stopping distances. Adapt your speed and driving behavior to the load of the trailer.

The gross train weight stated on the vehicle identification plate applies for road gradients up to 12% and altitudes up to 3281 feet (1000 meters) when towing a trailer. In mountainous regions the engine performance decreases due to lower air density with increasing altitude. In high altitude regions above 3281feet (1000 metres), the stipulated maximum permitted gross train weight must be reduced by 10% for every extra 3281 feet (1000 metres).

Fiesta (CCN) Vehicles Built From: 12-01-2015 Vehicles Built Up To: 14-10-2015, CG3582en enGBR, Edition date: 12/2014, First Printing

Note: *Not all vehicles are suitable or approved to have tow bars fitted. See an authorized dealer for further information.*

Trailer Lighting

The electrical system on your vehicle is not suitable for towing trailers with LED lamps.

TOWING A TRAILER - 1.6L ECOBOOST™

WARNING

Your vehicle is not approved for trailer towing.

TOW BALL

WARNINGS

When not in use, always transport the tow ball arm securely fastened in the luggage compartment.

Take special care when fitting the tow ball arm as the safety of your vehicle and the trailer depends on this.

Do not use any tools for mounting or dismounting the tow ball arm.

Do not modify the trailer coupling.

Do not disassemble or repair the tow ball arm.

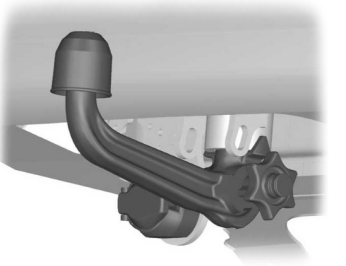

E71328

A 13-pin trailer socket and the tow ball arm seat are provided under the rear bumper. Turn the trailer socket down through 90 degrees until it engages in the end position.

Unlocking the Tow Ball Arm Mechanism

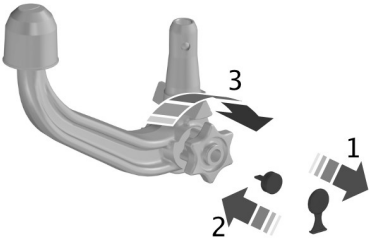

E71329

1. Remove the protecting cap.
2. Insert the key and turn it clockwise to unlock.
3. Hold the tow ball arm. Pull the handwheel out and turn it clockwise until it clicks.

Note: *The red mark on the handwheel must align with the green mark on the tow ball.*

4. Release the handwheel. The tow ball arm is unlocked.

Fiesta (CCN) Vehicles Built From: 12-01-2015 Vehicles Built Up To: 14-10-2015, CG3582en enGBR, Edition date: 12/2014, First Printing

Inserting the Tow Ball Arm

WARNING

The tow ball arm may only be inserted when completely unlocked.

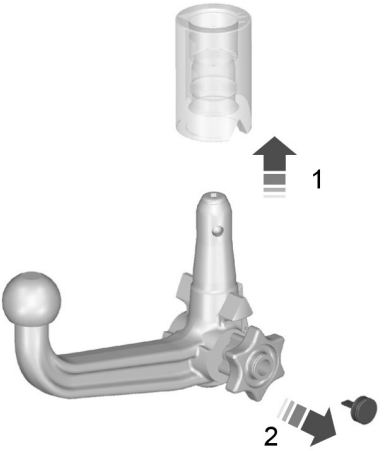

E71330

Note: *Pull out the plug.*

1. Insert the tow ball arm vertically and press it upwards until it engages.

Note: *Do not hold your hand near the handwheel.*

Note: *The green mark on the handwheel must align with the green mark on the tow ball.*

2. Turn the key counterclockwise and remove the key to lock the tow ball.
3. Pull the protecting cap from the key bow and press it onto the lock.

Driving With a Trailer

WARNING

If any of the below conditions cannot be met, do not use the tow bar and have it checked by an authorized dealer.

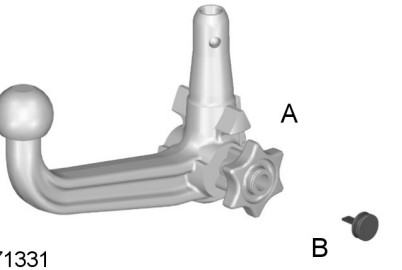

E71331

Before starting your journey, make sure that the tow ball arm is correctly locked. Check that:

- the green marks are aligned
- the handwheel (A) is correctly fitted to the tow ball arm
- you have removed the key (B)
- the tow ball arm is securely positioned.

Fiesta (CCN) Vehicles Built From: 12-01-2015 Vehicles Built Up To: 14-10-2015, CG3582en enGBR, Edition date: 12/2014, First Printing

Removing the Tow Ball Arm

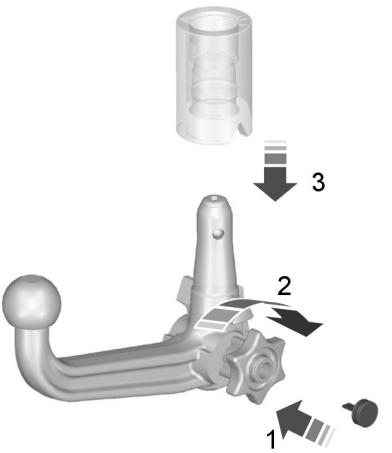

E71332

Note: *Unhitch the trailer.*

1. Remove the protecting cap. Press the cap into the key bow. Insert the key and unlock.
2. Hold the tow ball arm. Pull the handwheel out, turn it clockwise against the stop.
3. Remove the tow ball arm.
4. Release the handwheel.

When unlocked in this way, the tow ball arm can be reinserted at any time.

Driving Without a Trailer

WARNING

Never unlock the tow ball arm with the trailer attached.

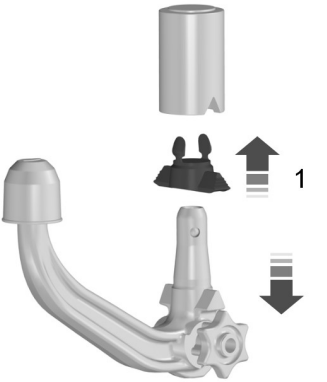

E94771

Remove the tow ball arm. Insert the plug into its seat (1).

Maintenance

WARNING

Remove the tow ball arm and protect the seat with the plug before steam cleaning your vehicle.

Keep the system clean. Periodically lubricate bearings, sliding surfaces, and locking balls with resin-free grease or oil and the lock with graphite.

In case of loss, replacement keys are available from the manufacturer by stating the number on the lock cylinder.

Fiesta (CCN) Vehicles Built From: 12-01-2015 Vehicles Built Up To: 14-10-2015, CG3582en enGBR, Edition date: 12/2014, First Printing

TOWING POINTS

Front Towing Point

WARNING

The recovery hook has a left-hand thread. Turn it counterclockwise to install it. Make sure that it is fully tightened. Failure to do so could result in the recovery hook becoming loose.

E152070

1. Push the cover.
2. Release the cover.

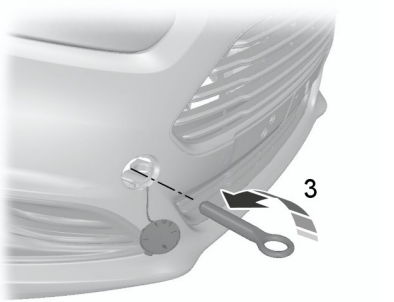

E152071

3. Install the recovery hook.

The recovery hook is located in the spare wheel well.

You must carry the recovery hook in your vehicle at all times.

Rear Towing Point

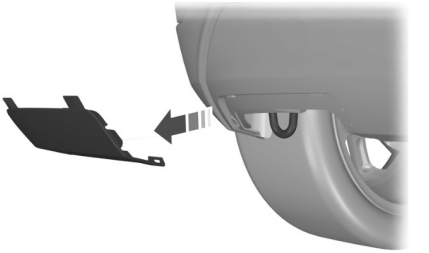

E102895

Remove the cover.

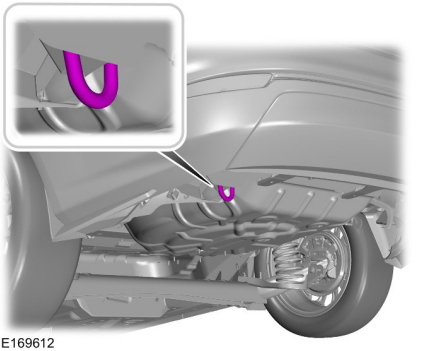

E169612

Note: *If your vehicle has a tow bar, use this to tow other vehicles.*

Fiesta (CCN) Vehicles Built From: 12-01-2015 Vehicles Built Up To: 14-10-2015, CG3582en enGBR, Edition date: 12/2014, First Printing

TOWING THE VEHICLE ON FOUR WHEELS

All Vehicles

WARNINGS

You must switch the ignition on when your vehicle is being towed.

If your vehicle has a steering wheel lock make sure the ignition is in the accessory or on position when being towed.

The brake and steering assistance will not operate unless the engine is running. Press the brake pedal harder and allow for increased stopping distances and heavier steering.

Too much tension in the tow rope could cause damage to your vehicle or the vehicle that is towing.

Do not use a rigid tow bar on the front towing eye.

When towing your vehicle you must select neutral.

Drive off slowly and smoothly without jerking the towed vehicle.

Vehicles with Automatic Transmission

WARNINGS

If a speed of 12 mph (20 km/h) and a distance of 12 miles (20 kilometers) is to be exceeded the drive wheels must be lifted clear of the ground.

It is recommended not to tow with the drive wheels on the ground. However, if it is required to move your vehicle from a dangerous location, do not tow your vehicle faster than 12 mph (20 km/h) or further than 12 miles (20 kilometers).

WARNINGS

Do not tow your vehicle backward.

In the event of a mechanical failure of the transmission the drive wheels must be lifted clear of the ground.

Do not tow your vehicle if the ambient temperature is below 32ºF (0ºC).

Fiesta (CCN) Vehicles Built From: 12-01-2015 Vehicles Built Up To: 14-10-2015, CG3582en enGBR, Edition date: 12/2014, First Printing

BREAKING-IN

Tires

WARNING

New tires need to be run-in for approximately 300 miles (500 kilometers). During this time, you may experience different driving characteristics.

Brakes and Clutch

WARNING

Avoid heavy use of the brakes and clutch if possible for the first 100 miles (150 kilometers) in town and for the first 1000 miles (1500 kilometers) on freeways.

Engine

WARNING

Avoid driving too fast during the first 1000 miles (1500 kilometers). Vary your speed frequently and change up through the gears early. Do not labor the engine.

Vehicles With a Diesel Engine

During the first 2000 miles (3000 kilometers), you may notice a ticking sound when your vehicle slows down. This is due to adjustments of your new diesel engine and is normal.

COLD WEATHER PRECAUTIONS

The functional operation of some components and systems can be affected at temperatures below -13ºF (-25ºC).

DRIVING THROUGH WATER

WARNINGS

Drive through water in an emergency only and not as part of normal driving.

Engine damage can occur if water enters the air filter.

In an emergency, you can drive your vehicle through water to a maximum depth of 8 inches (200 millimeters) and at a maximum speed of 6 mph (10 km/h). You must take extra care when driving through flowing water.

When driving in water, maintain a low speed and do not stop your vehicle. After driving through water and as soon as it is safe to do so:

- Depress the brake pedal lightly to check that the brakes are functioning correctly.
- Check that the horn works.
- Check that your vehicle's lamps are fully operational.
- Check the power assistance of the steering system.

FLOOR MATS

WARNINGS

Always use floor mats that are designed to fit the foot well of your vehicle. Only use floor mats that leave the pedal area unobstructed. Only use floor mats that are firmly secured to retention posts so that they cannot slip out of position and interfere with the pedals or impair safe operation of your vehicle in other ways.

Fiesta (CCN) Vehicles Built From: 12-01-2015 Vehicles Built Up To: 14-10-2015, CG3582en enGBR, Edition date: 12/2014, First Printing

WARNINGS

Pedals that cannot move freely can cause loss of vehicle control and increase the risk of serious personal injury.

Always make sure that the floor mats are properly attached to the retention posts in the carpet that are supplied with your vehicle. Floor mats must be properly secured to both retention posts to make sure mats do not shift out of position.

Never place floor mats or any other covering in the vehicle foot well that cannot be properly secured to prevent them from moving and interfering with the pedals or the ability to control the vehicle.

Never place floor mats or any other covering on top of already installed floor mats. Floor mats should always rest on top of vehicle carpeting surface and not another floor mat or other covering. Additional floor mats or any other covering will reduce the pedal clearance and potentially interfere with pedal operation.

Check attachment of floor mats on a regular basis. Always properly reinstall and secure floor mats that have been removed for cleaning or replacement.

Always make sure that objects cannot fall into the driver foot well while the vehicle is moving. Objects that are loose can become trapped under the pedals causing a loss of vehicle control.

Failure to properly follow floor mat installation or attachment instructions can potentially cause interference with pedal operation causing a loss of vehicle control.

To install floor mats, position the floor mat so that the eyelet is over the retention post and press down to lock in.

To remove the floor mat, reverse the installation procedure.

Fiesta (CCN) Vehicles Built From: 12-01-2015 Vehicles Built Up To: 14-10-2015, CG3582en enGBR, Edition date: 12/2014, First Printing

HAZARD WARNING FLASHERS

The hazard warning button is located on the instrument panel. Use it when your vehicle is creating a safety hazard for other motorists.

Press the button to turn on the hazard warning function, and the front and rear direction indicators will flash.

Press the button again to turn them off.

Note: *If used when the engine is not running, the battery will lose charge. There may be insufficient power to restart your engine.*

Note: *Depending on applicable laws and regulations in the country for which your vehicle was originally built, the hazard warning flashers may flash if you brake heavily.*

FIRST AID KIT

Space is provided in the luggage compartment.

WARNING TRIANGLE

Space is provided in the luggage compartment.

JUMP STARTING THE VEHICLE

WARNINGS

Do not use fuel lines, engine rocker covers or the intake manifold as grounding points.

Connect batteries with only the same nominal voltage.

WARNINGS

Always use booster cables with insulated clamps and adequate size cable.

Note: *Do not disconnect the battery from your vehicle's electrical system.*

To Connect the Booster Cables

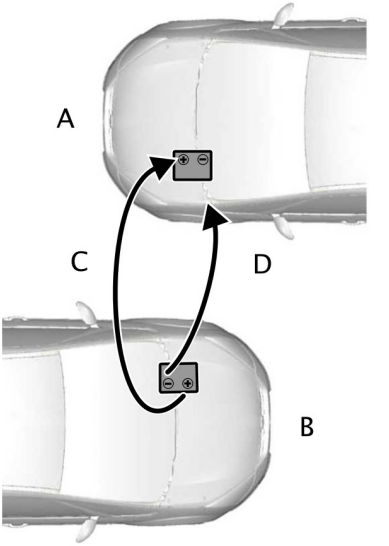

E102925

A	Vehicle with low charge battery
B	Booster battery vehicle
C	Positive connection cable
D	Negative connection cable

1. Position the vehicles so that they do not touch one another.
2. Switch off the engine and any electrical equipment.

Fiesta (CCN) Vehicles Built From: 12-01-2015 Vehicles Built Up To: 14-10-2015, CG3582en enGBR, Edition date: 12/2014, First Printing

3. Connect the positive (+) terminal of vehicle B with the positive (+) terminal of vehicle A (cable C).

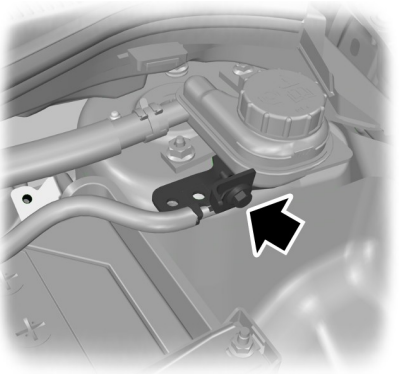

E102923

4. Connect the negative (-) terminal of vehicle B to the ground connection of vehicle A (cable D).

WARNINGS

Do not connect directly to the negative (–) terminal of the battery with low charge.

Make sure that the cables are clear of any moving parts and fuel delivery system parts.

To Start the Engine

1. Run the engine of vehicle B at a moderately high speed.
2. Start the engine of vehicle A.
3. Run both vehicles for a minimum of three minutes before disconnecting the cables.

WARNING

Do not switch on the headlamps when disconnecting the cables. The peak voltage could blow the bulbs.

Disconnect the cables in the reverse order.

Fiesta (CCN) Vehicles Built From: 12-01-2015 Vehicles Built Up To: 14-10-2015, CG3582en enGBR, Edition date: 12/2014, First Printing

FUSE BOX LOCATIONS

Engine Compartment Fuse Box

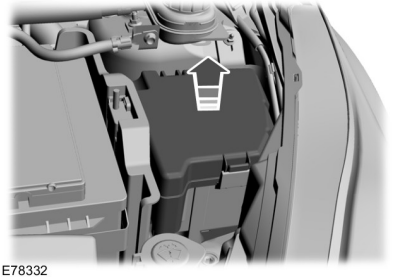

E78332

Passenger Compartment Fuse Box

This fuse box is located behind the glove box. Open the glove box and empty the contents. Press the sides inwards and swivel the glove box downward.

Fiesta (CCN) Vehicles Built From: 12-01-2015 Vehicles Built Up To: 14-10-2015, CG3582en enGBR, Edition date: 12/2014, First Printing

FUSE SPECIFICATION CHART

Engine Compartment Fuse Box

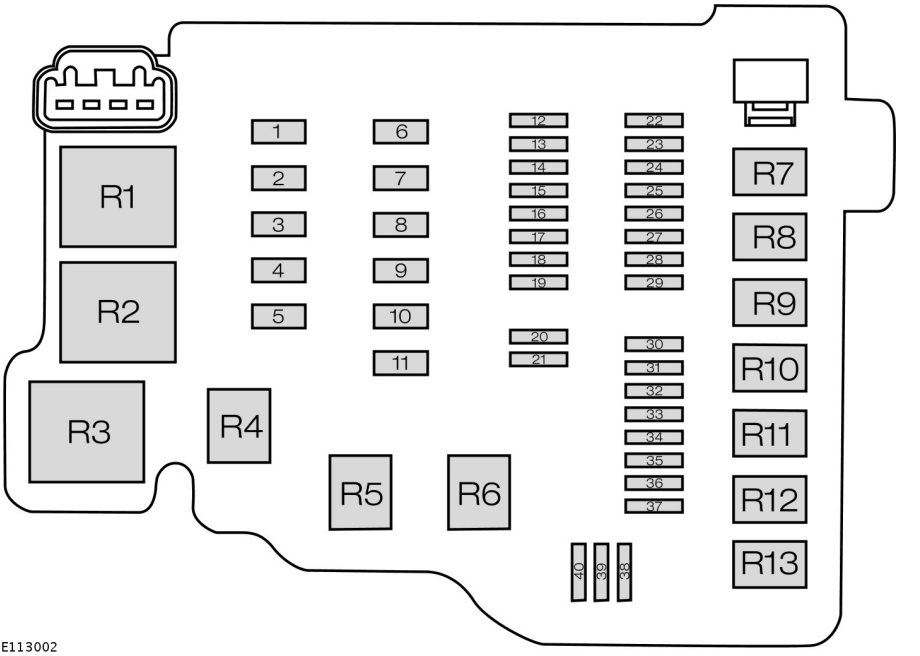

Fuse	Fuse rating	Circuits protected
1	40 A	Anti-lock braking system module
1	30 A	Anti-lock braking system, electronic stability program module
2	60 A	Cooling system fan high speed
3	40 A	Cooling system fan
3	30 A	Cooling system fan low speed
4	30 A	Heater blower
5	60 A	Passenger compartment fuse box supply (battery)

Fiesta (CCN) Vehicles Built From: 12-01-2015 Vehicles Built Up To: 14-10-2015, CG3582en enGBR, Edition date: 12/2014, First Printing

Fuse	Fuse rating	Circuits protected
6	30 A	Body control module
7	60 A	Passenger compartment fuse box supply (ignition)
8	50 A	Automatic transmission
9	60 A	Heated windshield
10	-	Not used
11	30 A	Starter relay
12	10 A	High beam left-hand relay
13	10 A	High beam right-hand relay
14	10 A	Water pump
15	10 A	Ignition coils
16	15 A	Powertrain control module, high and low cooling fan
17	15 A	Heated oxygen sensors (gasoline engines)
17	20 A	Power supply module (diesel engines)
18	-	Not used
19	7.5A	Air conditioning compressor
20	-	Not used
21	7.5A	Cooling system fan (1.6L Duratorq-TDCi)
22	-	Not used
23	15 A	Front fog lamps
24	15 A	Direction indicators
25	15 A	Exterior lighting left-hand side
26	15 A	Exterior lighting right-hand side
27	7.5 A	Powertrain control module
28	20 A	Anti-lock braking system, electronic stability program
29	10 A	Air conditioning clutch
30	-	Not used
31	-	Not used

Fiesta (CCN) Vehicles Built From: 12-01-2015 Vehicles Built Up To: 14-10-2015, CG3582en enGBR, Edition date: 12/2014, First Printing

Fuse	Fuse rating	Circuits protected
32	20 A	Horn, battery saver, keyless vehicle module
33	20 A	Heated rear window
34	20 A	Fuel pump relay, diesel fuel heater
35	15 A	Category one alarm system
36	7.5A	Automatic transmission controller
37	25 A	Front door module left-hand side
38	25 A	Front door module right-hand side
39	25 A	Rear door module left-hand side
40	25 A	Rear door module right-hand side

Relay	Circuits switched
R1	Cooling system fan
R2	Heated windshield
R3	Power control module
R4	High beam
R5	Not used
R6	Not used
R7	Engine cooling fan
R8	Starter
R9	Air conditioning clutch
R10	Front fog lamps
R11	Fuel pump, diesel fuel heater
R12	Reversing lamp
R13	Heater blower

Fiesta (CCN) Vehicles Built From: 12-01-2015 Vehicles Built Up To: 14-10-2015, CG3582en enGBR, Edition date: 12/2014, First Printing

Passenger Compartment Fuse Box

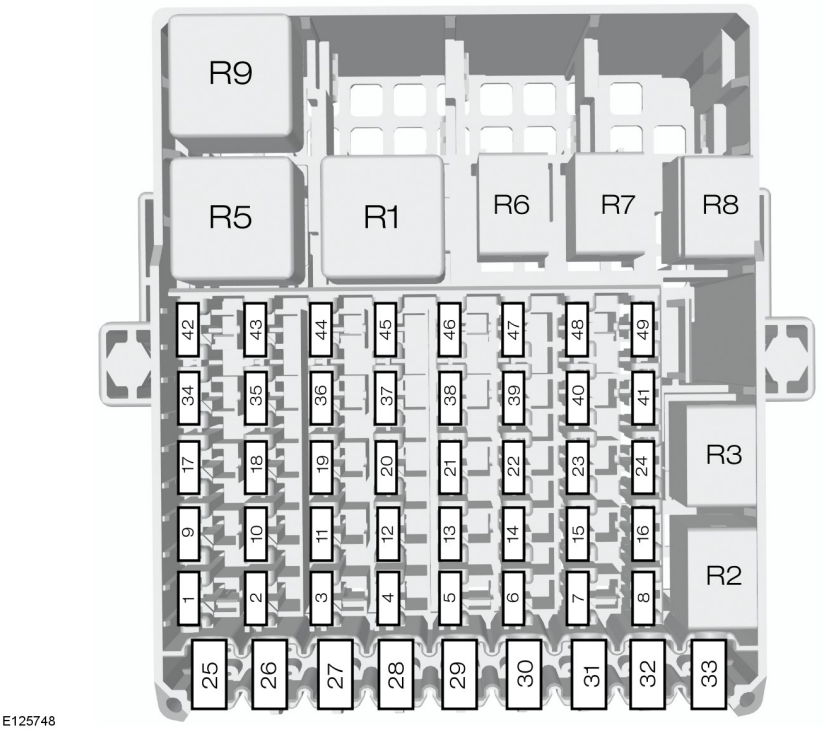

Fuse	Fuse rating	Circuits protected
1	7.5 A	Ignition, autowipers, heated windshield, dome lamp, interior mirror
2	10 A	Stop lamps
3	7.5 A	Reversing lamp
4	7.5 A	Headlamp leveling
5	20 A	Windshield wipers

Fiesta (CCN) Vehicles Built From: 12-01-2015 Vehicles Built Up To: 14-10-2015, CG3582en enGBR, Edition date: 12/2014, First Printing

Fuse	Fuse rating	Circuits protected
6	15 A	Rear window wiper
7	15 A	Washer pump
8	-	Not used
9	15 A	Passenger heated seat
10	15 A	Driver heated seat
11	-	Not used
12	10 A	Airbag module
13	10 A	Ignition, electric power assisted steering, instrument cluster, passive anti-theft system, anti-lock braking system
14	7.5 A	Powertrain control module, transmission selector lever, fuel pump
15	7.5 A	Audio system, instrument cluster
16	-	Not used
17	-	Not used
18	-	Not used
19	15 A	Data link connector
20	20 A	Trailer module
21	15 A	Audio system
22	7.5 A	Instrument cluster
23	7.5 A	Multi functional display, clock, internal scanner, heating vents, air conditioning panel
24	10 A	SYNC, Bluetooth
25	-	Not used

Fiesta (CCN) Vehicles Built From: 12-01-2015 Vehicles Built Up To: 14-10-2015, CG3582en enGBR, Edition date: 12/2014, First Printing

Fuse	Fuse rating	Circuits protected
26	30 A	Heated windshield left-hand side
27	30 A	Heated windshield right-hand side
28	30 A	High quality power supply (vehicles with Start-Stop)
29	20 A	Rear power point
30	20 A	Cigar lighter, front auxiliary power point
31	-	Not used
32	-	Not used
33	-	Not used
34	20 A	Keyless entry
35	20 A	Keyless entry
36	15 A	Ignition switch
37	-	Not used
38	-	Not used
39	-	Not used
40	-	Not used
41	-	Not used
42	7.5 A	Rear view camera
43	10 A	Active city stop
44	7.5 A	Passenger airbag deactivation indicator
45	-	Not used
46	-	Not used
47	-	Not used
48	-	Not used
49	-	Not used

Fiesta (CCN) Vehicles Built From: 12-01-2015 Vehicles Built Up To: 14-10-2015, CG3582en enGBR, Edition date: 12/2014, First Printing

Relay	Circuits switched
R1	Ignition
R2	Cigar lighter, front auxiliary power point
R3	Not used
R4	Active city stop
R5	Not used
R6	Keyless entry (accessory)
R7	Keyless entry (ignition)
R8	Rear auxiliary power point
R9	Not used
R10	Not used
R11	Not used
R12	Not used

CHANGING A FUSE

WARNINGS

Do not modify the electrical system of your vehicle in any way. Have repairs to the electrical system and the replacement of relays and high current fuses carried out by an authorized dealer.

Switch the ignition and all electrical equipment off before attempting to change a fuse.

Always replace a fuse with one that has the specified amperage rating. Using a fuse with a higher amperage rating can cause severe wire damage and could start a fire.

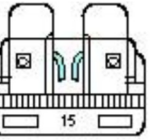

E142430

If electrical components in your vehicle are not working, a fuse may have blown. A break in the fuse wire will indicate a blown fuse. Check the appropriate fuses before replacing any electrical components.

Fiesta (CCN) Vehicles Built From: 12-01-2015 Vehicles Built Up To: 14-10-2015, CG3582en enGBR, Edition date: 12/2014, First Printing

GENERAL INFORMATION

Have your vehicle serviced regularly to help maintain its roadworthiness and resale value. There is a large network of Ford authorized repairers that are there to help you with their professional servicing expertise. Authorized repairers are best qualified to service your vehicle properly and expertly, with a wide range of highly specialized tools.

In addition to regular servicing, we recommend that you carry out the following checks.

WARNINGS

Switch the ignition off before touching or attempting adjustment of any kind.

Do not touch the electronic ignition system parts after you have switched the ignition on or when the engine is running. The system operates at high voltage.

Keep your hands and clothing clear of the engine cooling fan. Under certain conditions, the fan may continue to run for several minutes after you have switched the engine off.

Make sure that you fit filler caps securely after carrying out maintenance checks.

Daily Checks

- Exterior lamps.
- Interior lamps.
- Warning lamps and indicators.

Check When Refueling

- Engine oil level. See **Engine Oil Check** (page 159).
- Brake fluid level. See **Brake and Clutch Fluid Check** (page 161).
- Washer fluid level. See **Washer Fluid Check** (page 161).
- Tire pressures (when cold). See **Technical Specifications** (page 194).
- Tire condition. See **Wheels and Tires** (page 182).

Monthly Checks

- Engine coolant level (engine cold). See **Engine Coolant Check** (page 160).
- Pipes, hoses and reservoirs for leaks.
- Air conditioning operation.
- Parking brake operation.
- Horn operation.
- Tightness of lug nuts. See **Technical Specifications** (page 194).

OPENING AND CLOSING THE HOOD

Opening the Hood

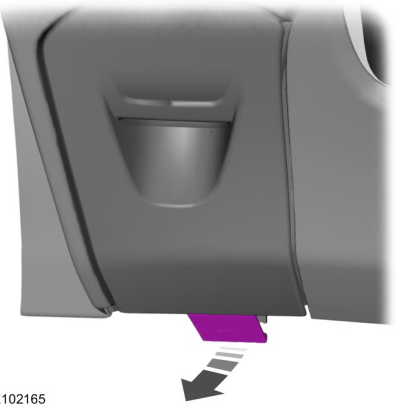

E102165

1. Pull the hood release lever.
2. Slightly lift the hood.

Fiesta (CCN) Vehicles Built From: 12-01-2015 Vehicles Built Up To: 14-10-2015, CG3582en enGBR, Edition date: 12/2014, First Printing

E163236

3. Move the catch to the left to release the hood.

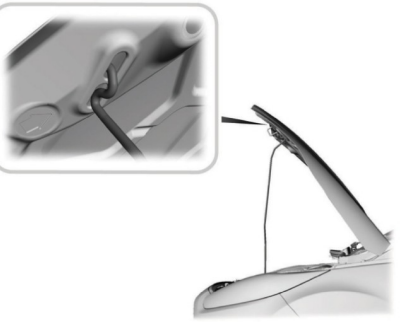

E87786

4. Open the hood and support it with the hood strut.

Closing the Hood

1. Remove the hood strut from the catch and secure it correctly in the clip.
2. Lower the hood and allow it to drop under its own weight for the last 8-12 in (20-30 cm).

Note: *Make sure that the hood is correctly closed.*

Fiesta (CCN) Vehicles Built From: 12-01-2015 Vehicles Built Up To: 14-10-2015, CG3582en enGBR, Edition date: 12/2014, First Printing

UNDER HOOD OVERVIEW - 1.0L DURATEC (48KW/65PS)

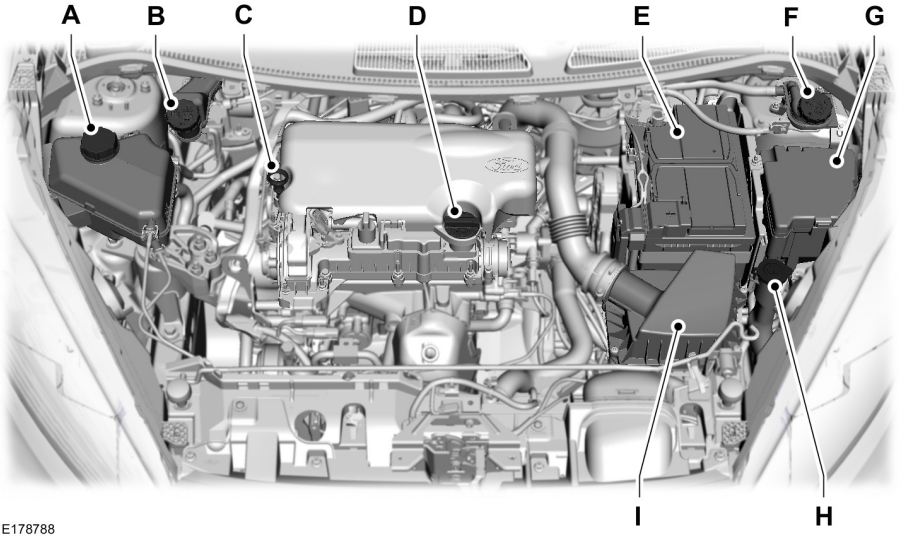

A Engine coolant reservoir*: See **Engine Coolant Check** (page 160).

B Brake and clutch fluid reservoir (right-hand drive)*: See **Brake and Clutch Fluid Check** (page 161).

C Engine oil dipstick*: See **Engine Oil Check** (page 159).

D Engine oil filler cap*: See **Engine Oil Check** (page 159).

E Battery: See **Changing the 12V Battery** (page 161).

F Brake and clutch fluid reservoir (left-hand drive)* See **Brake and Clutch Fluid Check** (page 161).

G Engine compartment fuse box. See **Fuses** (page 140).

H Windshield and rear window washer fluid reservoir: See **Washer Fluid Check** (page 161).

I Air cleaner: No maintenance necessary.

* The filler caps and the engine oil dipstick are colored for easy identification.

Fiesta (CCN) Vehicles Built From: 12-01-2015 Vehicles Built Up To: 14-10-2015, CG3582en enGBR, Edition date: 12/2014, First Printing

UNDER HOOD OVERVIEW - 1.0L ECOBOOST™

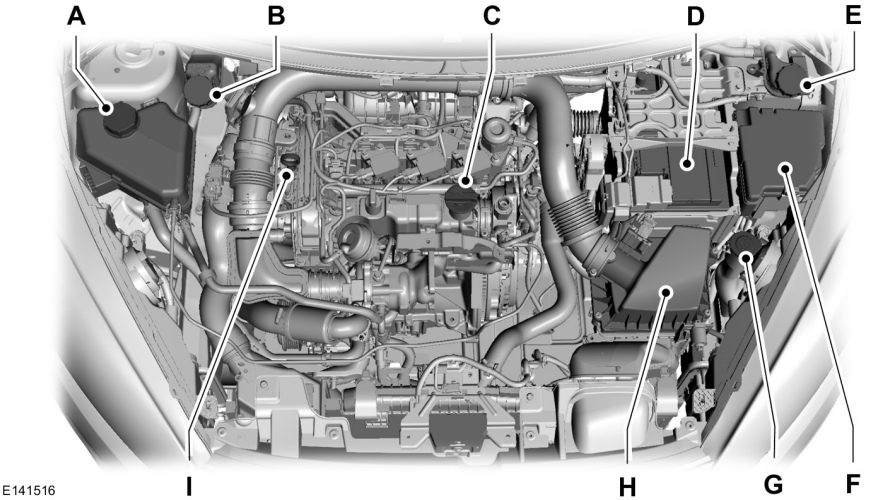

A Engine coolant reservoir*: See **Engine Coolant Check** (page 160).

B Brake and clutch fluid reservoir (right-hand drive)*: See **Brake and Clutch Fluid Check** (page 161).

C Engine oil filler cap*: See **Engine Oil Check** (page 159).

D Battery: See **Changing the 12V Battery** (page 161).

E Brake and clutch fluid reservoir (left-hand drive)*: See **Brake and Clutch Fluid Check** (page 161).

F Engine compartment fuse box. See **Fuses** (page 140).

G Windshield and rear window washer fluid reservoir: See **Washer Fluid Check** (page 161).

H Air cleaner: No maintenance necessary.

I Engine oil dipstick*: See **Engine Oil Check** (page 159).

* The filler caps and the engine oil dipstick are colored for easy identification.

Fiesta (CCN) Vehicles Built From: 12-01-2015 Vehicles Built Up To: 14-10-2015, CG3582en enGBR, Edition date: 12/2014, First Printing

UNDER HOOD OVERVIEW - 1.25L DURATEC-16V (SIGMA)

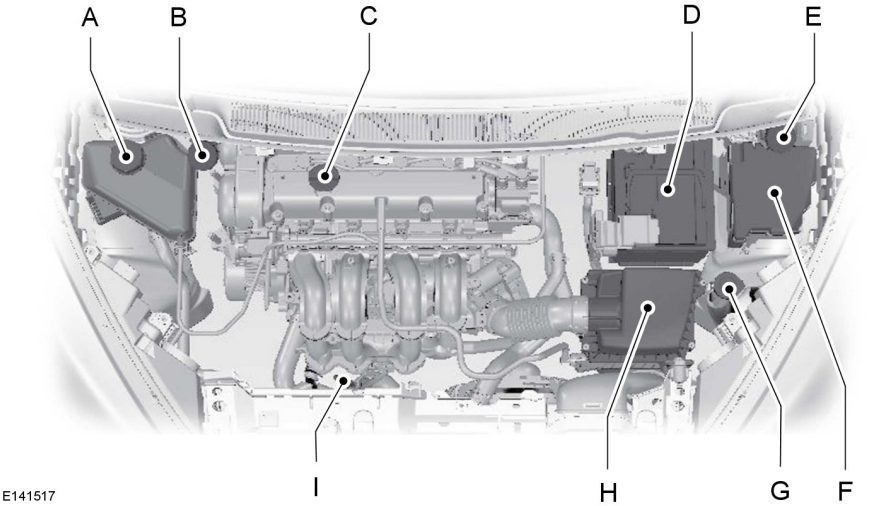

A Engine coolant reservoir*: See **Engine Coolant Check** (page 160).

B Brake and clutch fluid reservoir (right-hand drive)*: See **Brake and Clutch Fluid Check** (page 161).

C Engine oil filler cap*: See **Engine Oil Check** (page 159).

D Battery: See **Changing the 12V Battery** (page 161).

E Brake and clutch fluid reservoir (left-hand drive)*: See **Brake and Clutch Fluid Check** (page 161).

F Engine compartment fuse box. See **Fuses** (page 140).

G Windshield and rear window washer fluid reservoir: See **Washer Fluid Check** (page 161).

H Air cleaner: No maintenance necessary.

I Engine oil dipstick*: See **Engine Oil Check** (page 159).

* The filler caps and the engine oil dipstick are colored for easy identification.

Fiesta (CCN) Vehicles Built From: 12-01-2015 Vehicles Built Up To: 14-10-2015, CG3582en enGBR, Edition date: 12/2014, First Printing

UNDER HOOD OVERVIEW - 1.4L DURATEC-16V (SIGMA)

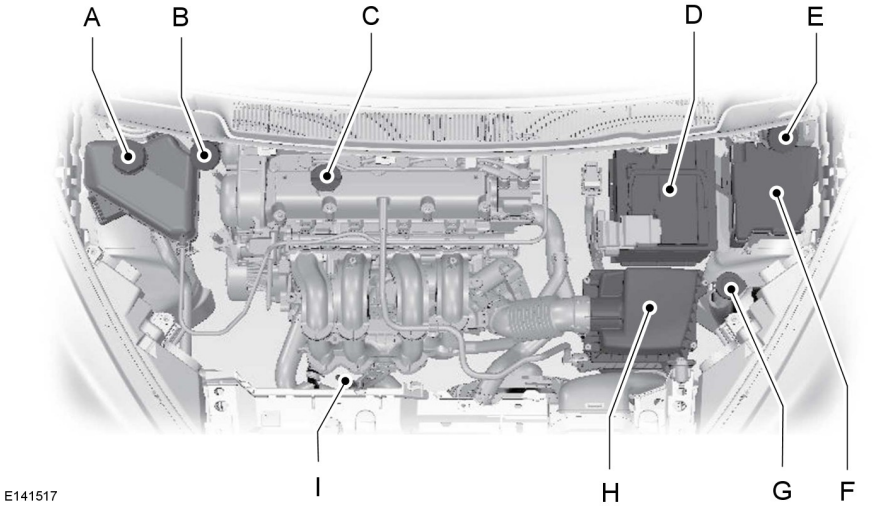

A Engine coolant reservoir*: See **Engine Coolant Check** (page 160).

B Brake and clutch fluid reservoir (right-hand drive)*: See **Brake and Clutch Fluid Check** (page 161).

C Engine oil filler cap*: See **Engine Oil Check** (page 159).

D Battery: See **Changing the 12V Battery** (page 161).

E Brake and clutch fluid reservoir (left-hand drive)*: See **Brake and Clutch Fluid Check** (page 161).

F Engine compartment fuse box. See **Fuses** (page 140).

G Windshield and rear window washer fluid reservoir: See **Washer Fluid Check** (page 161).

H Air cleaner: No maintenance necessary.

I Engine oil dipstick*: See **Engine Oil Check** (page 159).

* The filler caps and the engine oil dipstick are colored for easy identification.

Fiesta (CCN) Vehicles Built From: 12-01-2015 Vehicles Built Up To: 14-10-2015, CG3582en enGBR, Edition date: 12/2014, First Printing

UNDER HOOD OVERVIEW - 1.6L DURATEC-16V TI-VCT (SIGMA)

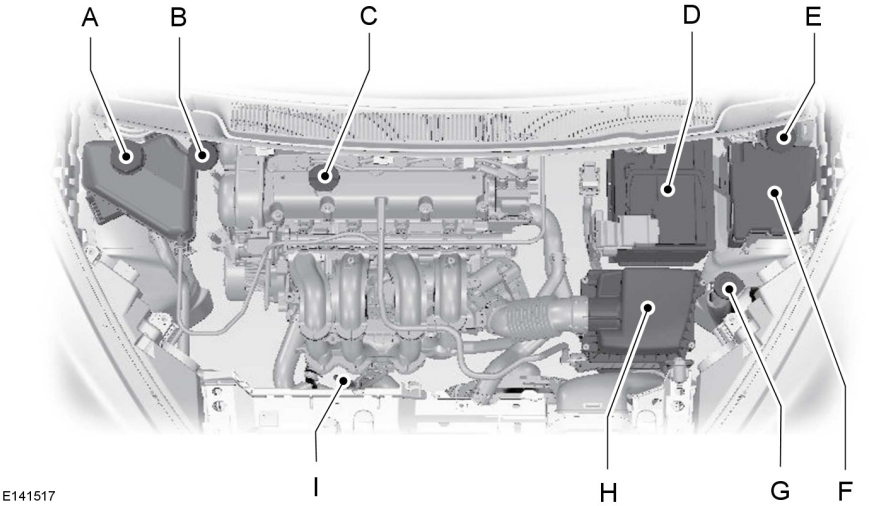

A Engine coolant reservoir*: See **Engine Coolant Check** (page 160).

B Brake and clutch fluid reservoir (right-hand drive)*: See **Brake and Clutch Fluid Check** (page 161).

C Engine oil filler cap*: See **Engine Oil Check** (page 159).

D Battery: See **Changing the 12V Battery** (page 161).

E Brake and clutch fluid reservoir (left-hand drive)*: See **Brake and Clutch Fluid Check** (page 161).

F Engine compartment fuse box. See **Fuses** (page 140).

G Windshield and rear window washer fluid reservoir: See **Washer Fluid Check** (page 161).

H Air cleaner: No maintenance necessary.

I Engine oil dipstick*: See **Engine Oil Check** (page 159).

* The filler caps and the engine oil dipstick are colored for easy identification.

Fiesta (CCN) Vehicles Built From: 12-01-2015 Vehicles Built Up To: 14-10-2015, CG3582en enGBR, Edition date: 12/2014, First Printing

UNDER HOOD OVERVIEW - 1.6L ECOBOOST™

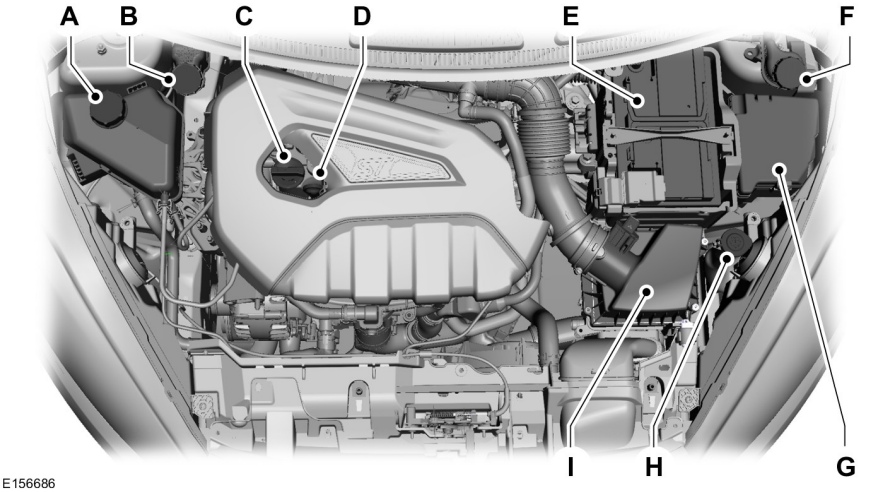

A Engine coolant reservoir*: See **Engine Coolant Check** (page 160).

B Brake and clutch fluid reservoir (right-hand drive)*: See **Brake and Clutch Fluid Check** (page 161).

C Engine oil filler cap*: See **Engine Oil Check** (page 159).

D Engine oil dipstick*: See **Engine Oil Check** (page 159).

E Battery: See **Changing the 12V Battery** (page 161).

F Brake and clutch fluid reservoir (left-hand drive)*: See **Brake and Clutch Fluid Check** (page 161).

G Engine compartment fuse box: See **Fuses** (page 140).

H Windshield and rear window washer fluid reservoir: See **Washer Fluid Check** (page 161).

I Air cleaner: No maintenance necessary.

* The filler caps and the engine oil dipstick are colored for easy identification.

Fiesta (CCN) Vehicles Built From: 12-01-2015 Vehicles Built Up To: 14-10-2015, CG3582en enGBR, Edition date: 12/2014, First Printing

UNDER HOOD OVERVIEW - 1.5L DURATORQ-TDCI DIESEL

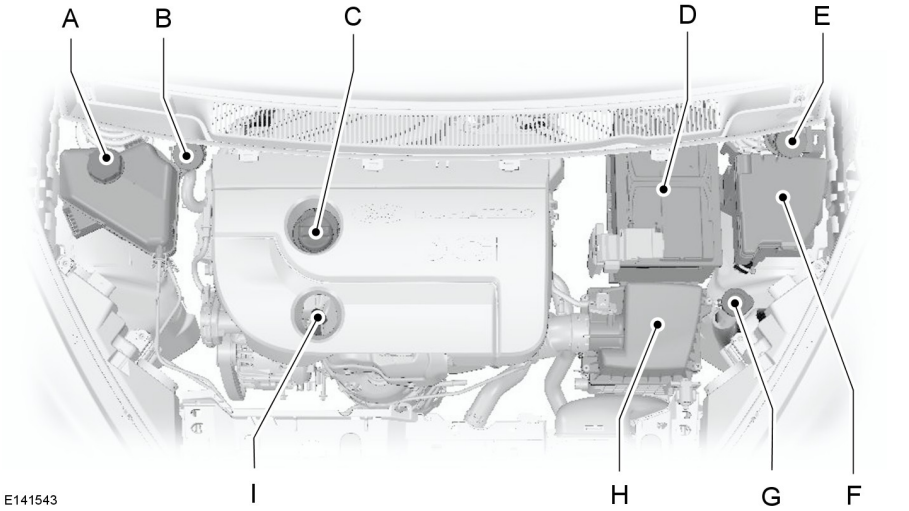

A Engine coolant reservoir*: See **Engine Coolant Check** (page 160).

B Brake and clutch fluid reservoir (right-hand drive)*: See **Brake and Clutch Fluid Check** (page 161).

C Engine oil filler cap*: See **Engine Oil Check** (page 159).

D Battery: See **Changing the 12V Battery** (page 161).

E Brake and clutch fluid reservoir (left-hand drive)*: See **Brake and Clutch Fluid Check** (page 161).

F Engine compartment fuse box. See **Fuses** (page 140).

G Windshield and rear window washer fluid reservoir: See **Washer Fluid Check** (page 161).

H Air cleaner: No maintenance necessary.

I Engine oil dipstick*: See **Engine Oil Check** (page 159).

* The filler caps and the engine oil dipstick are colored for easy identification.

Fiesta (CCN) Vehicles Built From: 12-01-2015 Vehicles Built Up To: 14-10-2015, CG3582en enGBR, Edition date: 12/2014, First Printing

UNDER HOOD OVERVIEW - 1.6L DURATORQ-TDCI (DV) DIESEL

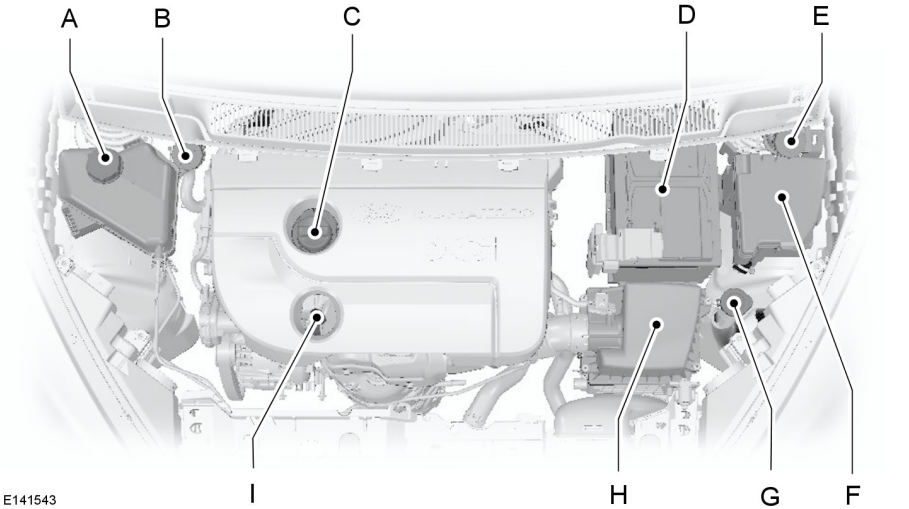

A Engine coolant reservoir*: See **Engine Coolant Check** (page 160).

B Brake and clutch fluid reservoir (right-hand drive)*: See **Brake and Clutch Fluid Check** (page 161).

C Engine oil filler cap*: See **Engine Oil Check** (page 159).

D Battery: See **Changing the 12V Battery** (page 161).

E Brake and clutch fluid reservoir (left-hand drive)*: See **Brake and Clutch Fluid Check** (page 161).

F Engine compartment fuse box. See **Fuses** (page 140).

G Windshield and rear window washer fluid reservoir: See **Washer Fluid Check** (page 161).

H Air cleaner: No maintenance necessary.

I Engine oil dipstick*: See **Engine Oil Check** (page 159).

* The filler caps and the engine oil dipstick are colored for easy identification.

Fiesta (CCN) Vehicles Built From: 12-01-2015 Vehicles Built Up To: 14-10-2015, CG3582en enGBR, Edition date: 12/2014, First Printing

ENGINE OIL DIPSTICK - 1.0L ECOBOOST™

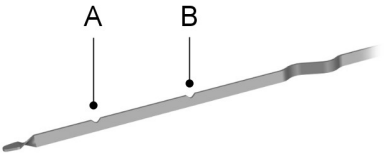

E141337

A Minimum
B Maximum

ENGINE OIL DIPSTICK - 1.4L DURATEC-16V (SIGMA)

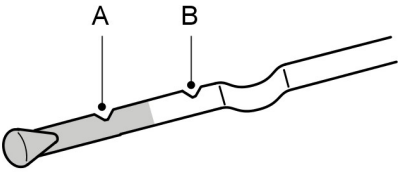

E95540

A Minimum
B Maximum

ENGINE OIL DIPSTICK - 1.25L DURATEC-16V (SIGMA)

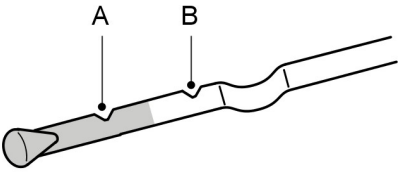

E95540

A Minimum
B Maximum

ENGINE OIL DIPSTICK - 1.6L DURATEC-16V TI-VCT (SIGMA)

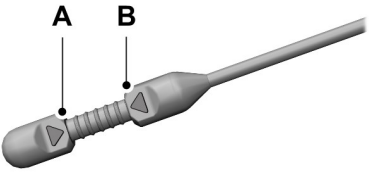

E188072

A Minimum.
B Maximum.

Fiesta (CCN) Vehicles Built From: 12-01-2015 Vehicles Built Up To: 14-10-2015, CG3582en enGBR, Edition date: 12/2014, First Printing

ENGINE OIL DIPSTICK - 1.5L DURATORQ-TDCI DIESEL

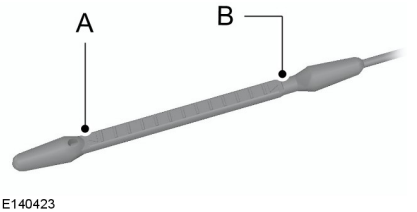

E140423

A Minimum

B Maximum

ENGINE OIL DIPSTICK - 1.6L DURATORQ-TDCI (DV) DIESEL

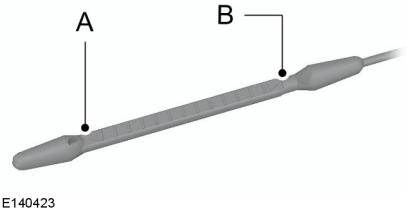

E140423

A Minimum

B Maximum

ENGINE OIL CHECK

1. Make sure that your vehicle is on level ground.
2. Switch off the engine and wait 10 minutes for the oil to drain into the oil pan.
3. Remove the dipstick and wipe it with a clean, lint free cloth. Replace the dipstick and remove it again to check the oil level.

If the oil level is at the minimum mark, add oil immediately. See **Technical Specifications** (page 176).

Note: *Check the oil level before starting the engine.*

Note: *Make sure that the oil level is between the minimum and the maximum marks.*

Note: *Do not use oil additives or other engine treatments. Under certain conditions, they may damage the engine.*

Note: *The oil consumption of new engines reaches its normal level after approximately 3000 miles (5000 kilometers).*

Adding Oil

WARNINGS

Only add oil when the engine is cold. If the engine is hot, wait 10 minutes for the engine to cool down. Failure to take care may result in personal injury.

Do not remove the filler cap when the engine is running. Failure to take care may result in personal injury.

1. Remove the filler cap.
2. Add oil that meets Ford specifications. See **Technical Specifications** (page 176).
3. Replace the filler cap. Turn it until you feel a strong resistance.

Note: *Do not add oil further than the maximum mark. Oil levels above the maximum mark may cause engine damage.*

Note: *Soak up any spillage with an absorbent cloth immediately.*

Fiesta (CCN) Vehicles Built From: 12-01-2015 Vehicles Built Up To: 14-10-2015, CG3582en enGBR, Edition date: 12/2014, First Printing

ENGINE COOLANT CHECK

WARNINGS

Do not dispose of engine coolant in the household refuse or the public sewage system. Use an authorized waste disposal facility.

Do not put engine coolant in the windshield washer fluid container. If sprayed on the windshield, engine coolant could make it difficult to see through the windshield.

E169064

Make sure that the coolant level is between the **MIN** and **MAX** marks on the coolant reservoir. If the coolant level is at or below the minimum mark, add coolant immediately.

Maintain coolant concentration within 48% to 50%, which equates to a freeze point between -20ºF (-29ºC) and -29.2ºF (-34ºC).

Note: *Coolant expands when it is hot. The level may extend beyond the **MAX** mark.*

Note: *Do not use stop leak pellets, cooling system sealants or additives as they can cause damage to the engine cooling or heating systems.*

Adding Engine Coolant

WARNINGS

Never remove the coolant reservoir cap while the engine is running or hot.

Only add coolant when the engine is cold. If the engine is hot, wait 10 minutes for the engine to cool down.

Do not allow the fluid to touch your skin or eyes. If this happens, rinse the affected areas immediately with plenty of water and contact your physician.

Undiluted coolant is flammable and may ignite if spilled on a hot exhaust.

Ford Motor Company does not recommend the use of recycled engine coolant since a Ford-approved recycling process is not yet available.

Do not mix different colors or types of coolant in your vehicle.

Note: *Add a 50/50 mixture of antifreeze and water or prediluted engine coolant that meets the correct specification.*

Note: *Use fluids which meet the specifications or requirements defined. Use of other fluids may lead to damage which is not covered by your vehicle's Warranty. See **Capacities and Specifications** (page 199).*

To top up the coolant level do the following:

1. Remove the coolant reservoir cap.
2. Add engine coolant to the MAX mark, do not overfill.
3. Replace the coolant reservoir cap. Turn it clockwise until you feel a strong resistance.

Note: *In case of emergency, you can add water without engine coolant in order to reach a vehicle service location.*

Fiesta (CCN) Vehicles Built From: 12-01-2015 Vehicles Built Up To: 14-10-2015, CG3582en enGBR, Edition date: 12/2014, First Printing

Note: *Prolonged use of an incorrect dilution of engine coolant can cause engine damage, such as corrosion, overheating or freezing.*

BRAKE AND CLUTCH FLUID CHECK

WARNINGS

Do not use any fluid other than the recommended brake fluid as this will reduce brake efficiency. Use of incorrect fluid could result in the loss of vehicle control, serious personal injury or death.

Only use brake fluid from a sealed container. Contamination with dirt, water, petroleum products or other materials may result in brake system damage or failure. Failure to adhere to this warning could result in the loss of vehicle control, serious personal injury or death.

Do not allow the fluid to touch your skin or eyes. This could cause serious personal injury. Rinse the affected areas immediately with plenty of water and consult a physician.

A fluid level between the **MAX** and **MIN** lines is within the normal operating range and there is no need to add fluid. A fluid level outside of the normal operating range could compromise the performance of the brake or clutch systems. Have your vehicle checked immediately.

E169063

See **Technical Specifications** (page 176).

Note: *The brake and the clutch systems are supplied from the same reservoir.*

WASHER FLUID CHECK

Note: *The reservoir supplies the front and rear washer systems.*

When adding fluid, use a mixture of washer fluid and water to help prevent freezing in cold weather and improve the cleaning capability. We recommend that you use only high quality washer fluid.

For information on fluid dilution, refer to the product instructions.

CHANGING THE 12V BATTERY

WARNING

For vehicles with Auto-Start-Stop the battery requirement is different. You must replace the battery with one of exactly the same specification.

The battery is in the engine compartment. See **Under Hood Overview** (page 150).

Fiesta (CCN) Vehicles Built From: 12-01-2015 Vehicles Built Up To: 14-10-2015, CG3582en enGBR, Edition date: 12/2014, First Printing

Make sure that you dispose of old batteries in an environmentally friendly way.

Seek advice from your local authority about recycling old batteries.

CHECKING THE WIPER BLADES

E142463

Run the tip of your fingers over the edge of the blade to check for roughness.

Clean the wiper blades with washer fluid or water applied with a soft sponge or cloth.

CHANGING THE WIPER BLADES

Windshield Wiper Blades

Note: *Do not hold the wiper blade when lifting the wiper arm.*

Note: *Make sure that the wiper arm does not spring back against the glass when the wiper blade is not attached.*

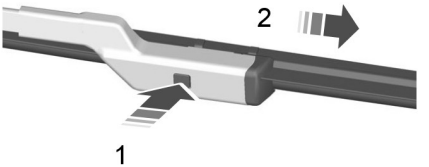

E72899

1. Lift the wiper arm and then press the wiper blade locking button.
2. Remove the wiper blade.
3. Install in the reverse order.

Note: *Make sure that the wiper blade locks into place.*

Rear Window Wiper Blade

Note: *Do not hold the wiper blade when lifting the wiper arm.*

Note: *Make sure that the wiper arm does not spring back against the glass when the wiper blade is not attached.*

1. Lift the wiper arm.

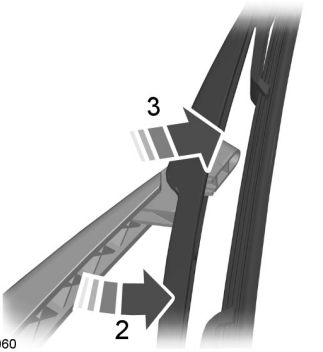

E130060

2. Slightly rotate the wiper blade.
3. Disengage the wiper blade from the wiper arm.
4. Remove the wiper blade.
5. Install in the reverse order.

Note: *Make sure that the wiper blade locks into place.*

REMOVING A HEADLAMP

1. Open the hood. See **Opening and Closing the Hood** (page 148).

Fiesta (CCN) Vehicles Built From: 12-01-2015 Vehicles Built Up To: 14-10-2015, CG3582en enGBR, Edition date: 12/2014, First Printing

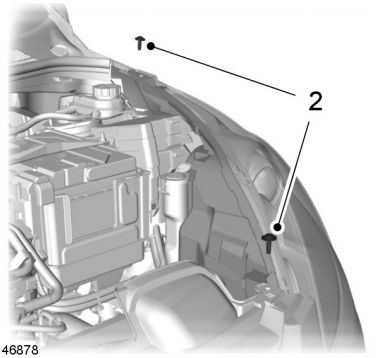

E146878

2. Remove the screws.

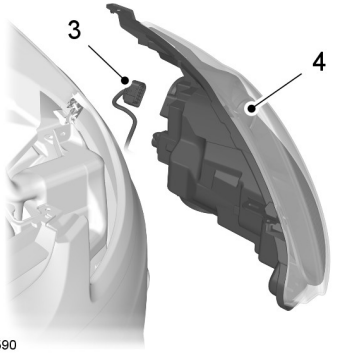

E102590

3. Disconnect the electrical connector.
4. Remove the headlamp.

Note: *When fitting the headlamp, make sure that you reconnect the electrical connector correctly.*

Note: *When fitting the headlamp, make sure that you fully engage the headlamp in the retaining clips.*

CHANGING A BULB - 3-DOOR

WARNINGS

Switch the lamps and the ignition off.

Let the bulb cool down before removing it.

Note: *Only fit bulbs of the correct specification.*

Note: *The following instructions describe how to remove the bulbs. Fit replacements in the reverse order unless otherwise stated.*

Headlamp

Note: *Remove the covers to gain access to the bulbs.*

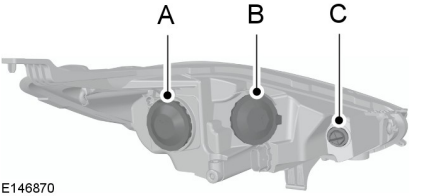

E146870

A	Headlamp low beam
B	Headlamp high beam and side lamp
C	Direction indicator

Headlamp Low Beam

1. Remove the headlamp. See **Removing a Headlamp** (page 162).

Fiesta (CCN) Vehicles Built From: 12-01-2015 Vehicles Built Up To: 14-10-2015, CG3582en enGBR, Edition date: 12/2014, First Printing

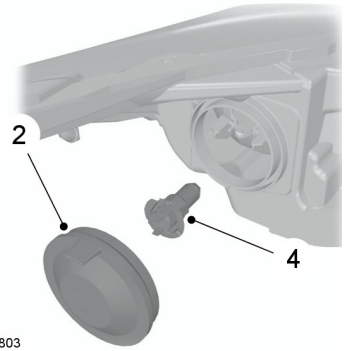

E146803

2. Remove the cover.
3. Disconnect the electrical connector.
4. Release the clip and remove the bulb.

Note: *Do not touch the glass of the bulb.*

Headlamp High Beam

1. Remove the headlamp. See **Removing a Headlamp** (page 162).

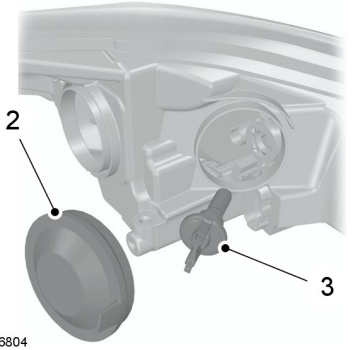

E146804

2. Remove the cover.
3. Turn the bulb counterclockwise and remove it.

Note: *Do not touch the glass of the bulb.*

Side Lamp

1. Remove the headlamp. See **Removing a Headlamp** (page 162).

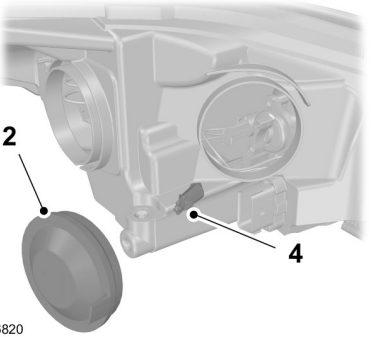

E146820

2. Remove the cover.
3. Remove the bulb holder.
4. Remove the bulb.

Direction Indicator

1. Remove the headlamp. See **Removing a Headlamp** (page 162).

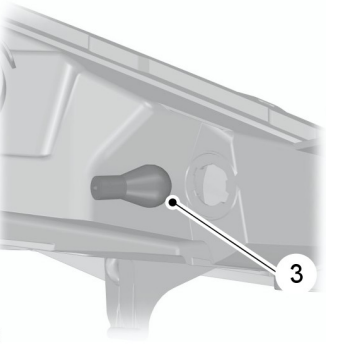

E146805

2. Turn the bulb holder counterclockwise and remove it.

Fiesta (CCN) Vehicles Built From: 12-01-2015 Vehicles Built Up To: 14-10-2015, CG3582en enGBR, Edition date: 12/2014, First Printing

3. Gently press the bulb into the bulb holder, turn it counterclockwise and remove it.

Daytime Running Lamps

E161983

Note: *These are not serviceable items, see an authorized dealer if they fail.*

Side Repeater

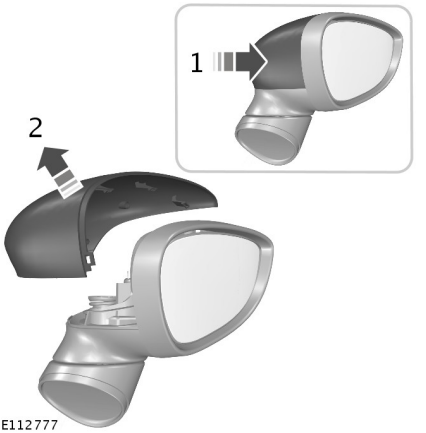

E112777

1. Press the side of the cover to release the clips.
2. Remove the cover.

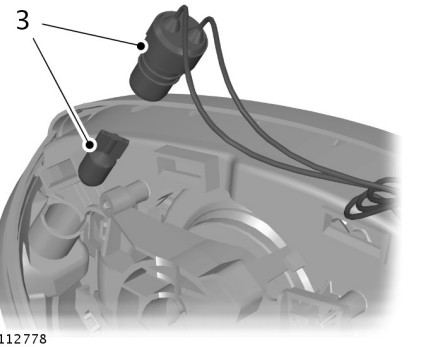

E112778

3. Remove the bulb holder. Remove the bulb.

Front Fog Lamps

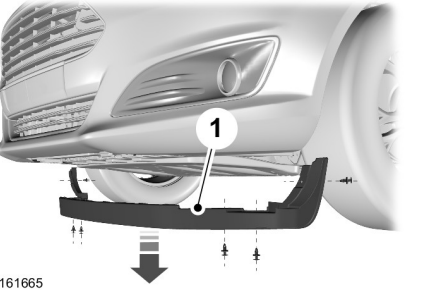

E161665

1. Remove the retaining clips to gain access to the lamp assembly.

Fiesta (CCN) Vehicles Built From: 12-01-2015 Vehicles Built Up To: 14-10-2015, CG3582en enGBR, Edition date: 12/2014, First Printing

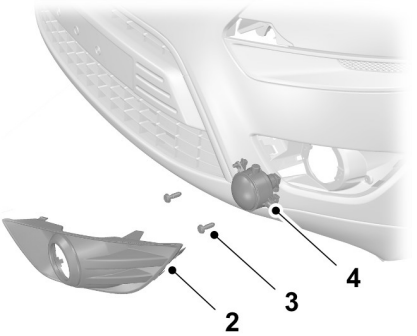

E161667

Note: *You cannot separate the fog lamp bulb from the bulb holder.*

2. Using a suitable implement, remove the cover.
3. Remove the screws.
4. Remove the lamp.

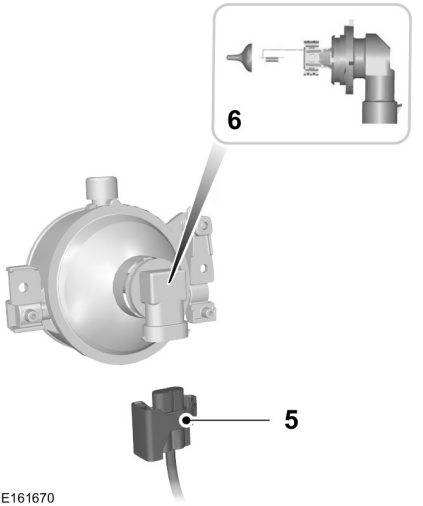

E161670

5. Disconnect the electrical connector.
6. Turn the bulb holder counterclockwise and remove it.

Rear Lamps

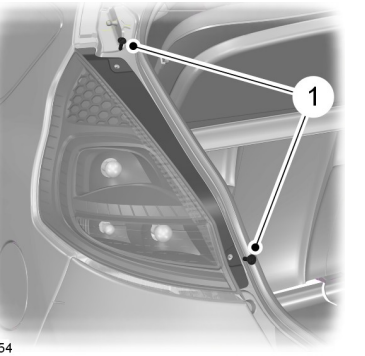

E102854

1. Remove the screws.

E112775

2. Lift up the luggage compartment seal.

Fiesta (CCN) Vehicles Built From: 12-01-2015 Vehicles Built Up To: 14-10-2015, CG3582en enGBR, Edition date: 12/2014, First Printing

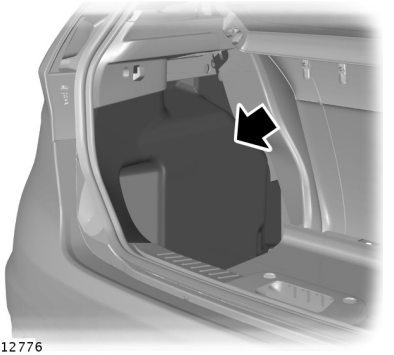

E112776

3. Remove the carpet.

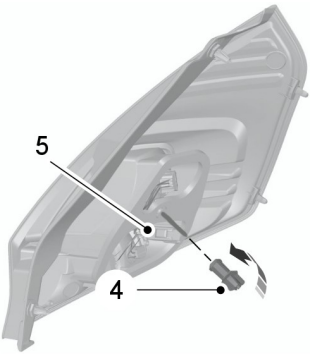

E147056

4. Remove the wing nut.
5. Disconnect the electrical connector.
6. Turn the bulb holder counterclockwise and remove it.

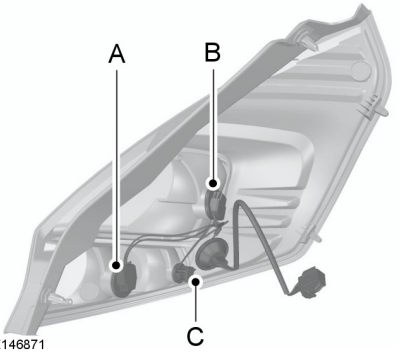

E146871

7. Gently press the bulb into the bulb holder, turn it counterclockwise and remove it.

A. Indicator
B. Tail and brake
C. Reverse

Central High Mounted Brake Lamp

Note: *These are not serviceable items, see an authorized dealer if they fail.*

License Plate Lamp

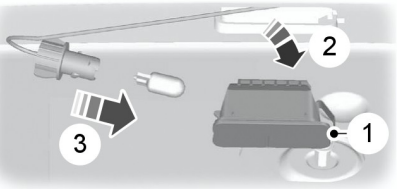

E72789

1. Carefully release the spring clip.
2. Remove the lamp.
3. Remove the bulb.

Fiesta (CCN) Vehicles Built From: 12-01-2015 Vehicles Built Up To: 14-10-2015, CG3582en enGBR, Edition date: 12/2014, First Printing

Interior Lamp

Note: *Do not remove the lamp lens.*

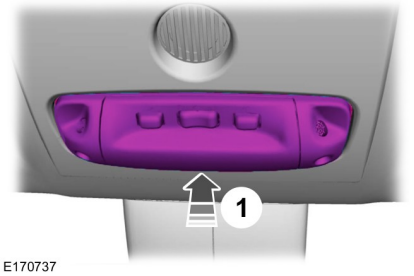

1. Use a suitable tool, for example a screwdriver, to carefully remove the lamp.

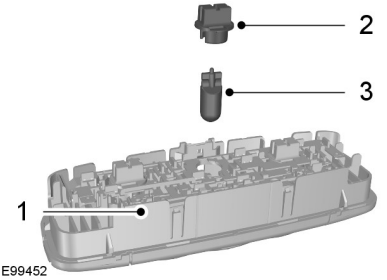

2. Turn the bulb holder counterclockwise and remove it.
3. Remove the bulb.

Reading Lamps

Note: *Do not remove the lamp lens.*

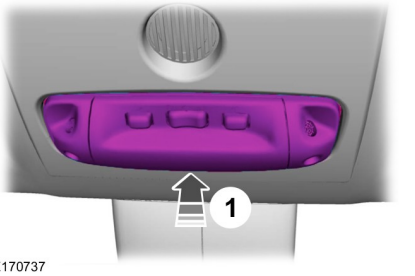

1. Use a suitable tool, for example a screwdriver, to carefully remove the lamp.

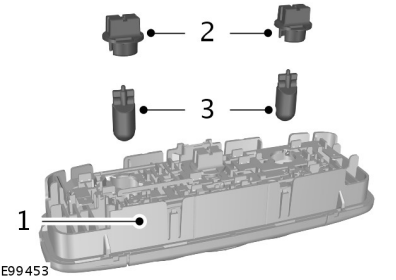

2. Turn the bulb holder counterclockwise and remove it.
3. Remove the bulb.

Fiesta (CCN) Vehicles Built From: 12-01-2015 Vehicles Built Up To: 14-10-2015, CG3582en enGBR, Edition date: 12/2014, First Printing

Luggage Compartment Lamp, Footwell Lamp and Liftgate Lamp

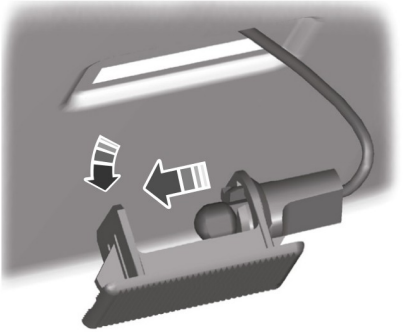

E72784

1. Carefully pry out the lamp.
2. Remove the bulb.

CHANGING A BULB - 5-DOOR

WARNINGS

Switch the lamps and the ignition off. Failure to follow this warning could result in serious personal injury.

Make sure the bulbs have cooled down before removing them. Failure to follow this warning could result in serious personal injury.

Note: *Only fit bulbs of the correct specification.*

Note: *The following instructions describe how to remove the bulbs. Fit replacements in the reverse order unless otherwise stated.*

Headlamp

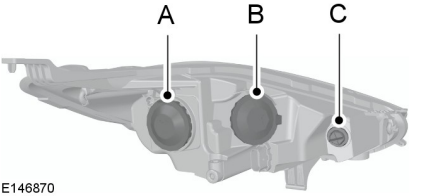

E146870

A	Headlamp low beam
B	Headlamp high beam and side lamp
C	Direction indicator

Note: *Remove the covers to gain access to the bulbs.*

Headlamp Low Beam

1. Remove the headlamp. See **Removing a Headlamp** (page 162).

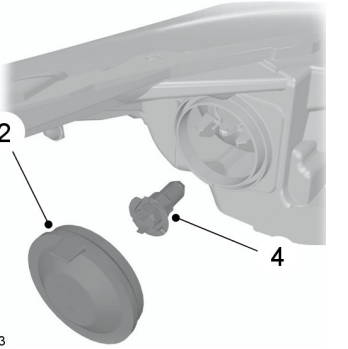

E146803

2. Remove the cover.
3. Disconnect the electrical connector.
4. Release the clip and remove the bulb.

Note: *Do not touch the glass of the bulb.*

Fiesta (CCN) Vehicles Built From: 12-01-2015 Vehicles Built Up To: 14-10-2015, CG3582en enGBR, Edition date: 12/2014, First Printing

Headlamp High Beam

1. Remove the headlamp. See **Removing a Headlamp** (page 162).

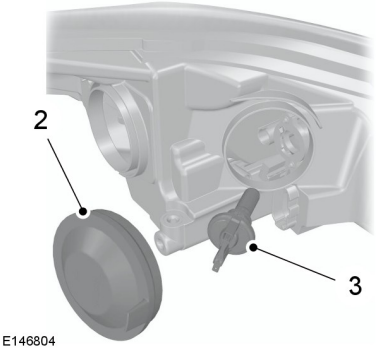

E146804

2. Remove the cover.
3. Turn the bulb counterclockwise and remove it.

Note: *Do not touch the glass of the bulb.*

Side Lamp

1. Remove the headlamp. See **Removing a Headlamp** (page 162).

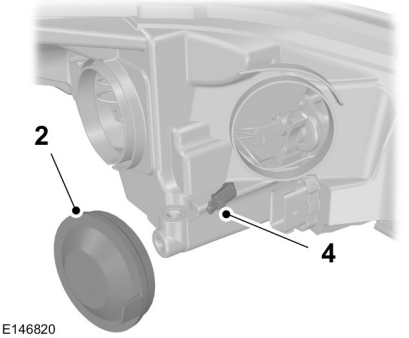

E146820

2. Remove the cover.
3. Remove the bulb holder.
4. Remove the bulb.

Direction Indicator

1. Remove the headlamp. See **Removing a Headlamp** (page 162).

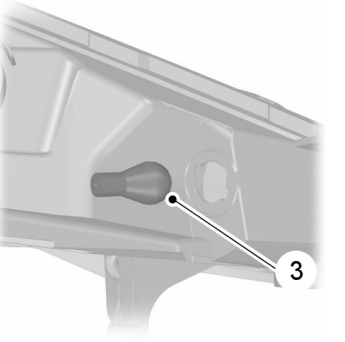

E146805

2. Turn the bulb holder counterclockwise and remove it.
3. Gently press the bulb into the bulb holder, turn it counterclockwise and remove it.

Daytime Running Lamps

E161983

Note: *This is not a serviceable item, see an authorized dealer if it fails.*

Fiesta (CCN) Vehicles Built From: 12-01-2015 Vehicles Built Up To: 14-10-2015, CG3582en enGBR, Edition date: 12/2014, First Printing

Side Repeater

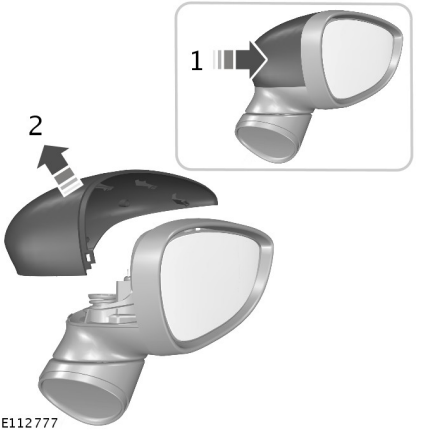

E112777

1. Press the side of the cover to release the clips.
2. Remove the cover.

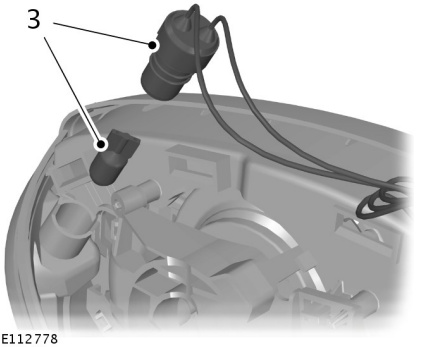

E112778

3. Remove the bulb holder. Remove the bulb.

Approach Lamps

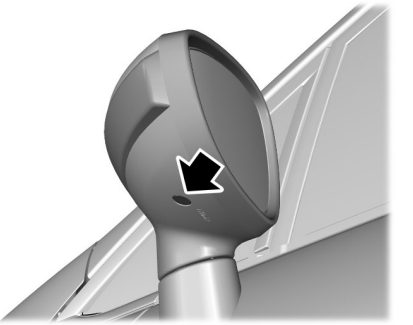

E169047

Note: *This is not a serviceable item, see an authorized dealer if it fails.*

Front Fog Lamps

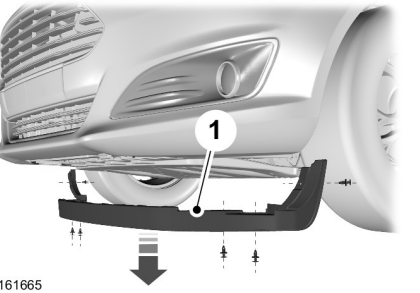

E161665

1. Remove the retaining clips to gain access to the lamp assembly.

Fiesta (CCN) Vehicles Built From: 12-01-2015 Vehicles Built Up To: 14-10-2015, CG3582en enGBR, Edition date: 12/2014, First Printing

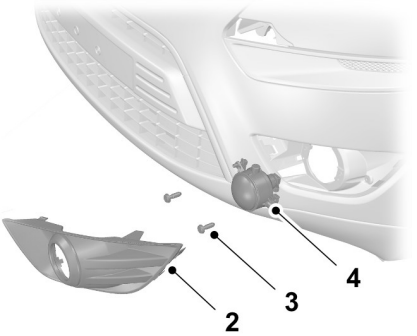

E161667

Note: *You cannot separate the fog lamp bulb from the bulb holder.*

2. Using a suitable implement, remove the cover.
3. Remove the screws.
4. Remove the lamp.

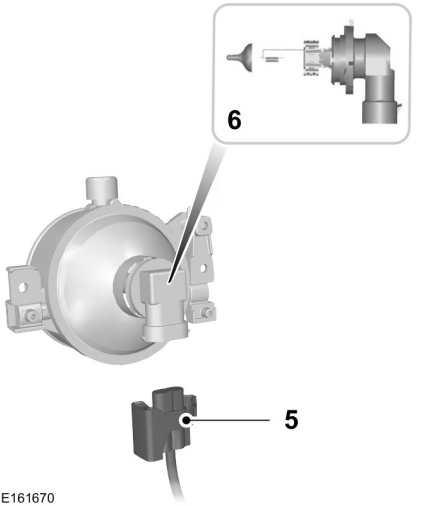

E161670

5. Disconnect the electrical connector.
6. Turn the bulb holder counterclockwise and remove it.

Rear Lamps

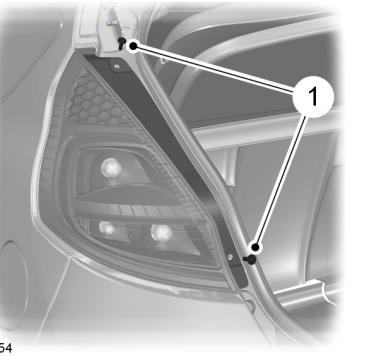

E102854

1. Remove the screws.

E112775

2. Lift up the luggage compartment seal.

Fiesta (CCN) Vehicles Built From: 12-01-2015 Vehicles Built Up To: 14-10-2015, CG3582en enGBR, Edition date: 12/2014, First Printing

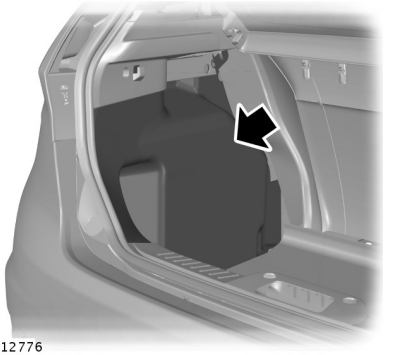

E112776

3. Remove the carpet.

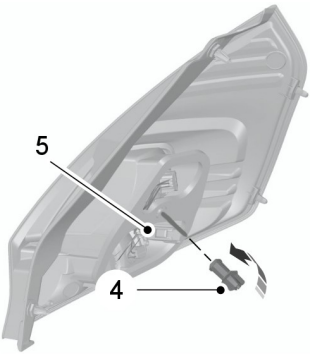

E147056

4. Remove the wing nut.
5. Disconnect the electrical connector.
6. Turn the bulb holder counterclockwise and remove it.

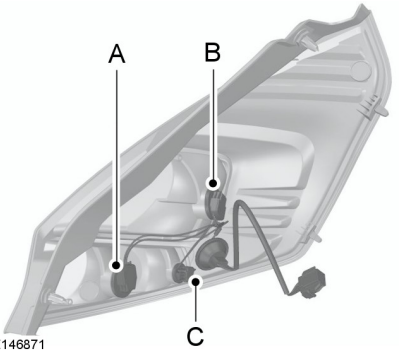

E146871

7. Gently press the bulb into the bulb holder, turn it counterclockwise and remove it.

A. Indicator
B. Tail and brake
C. Reverse

Central High Mounted Brake Lamp

Note: *This is not a serviceable item, see an authorized dealer if it fails.*

License Plate Lamp

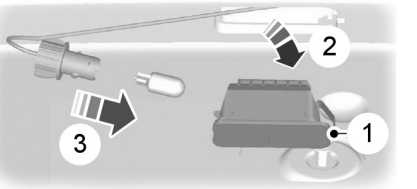

E72789

1. Carefully release the spring clip.
2. Remove the lamp.
3. Remove the bulb.

Fiesta (CCN) Vehicles Built From: 12-01-2015 Vehicles Built Up To: 14-10-2015, CG3582en enGBR, Edition date: 12/2014, First Printing

Interior Lamp

Note: *Do not remove the lamp lens.*

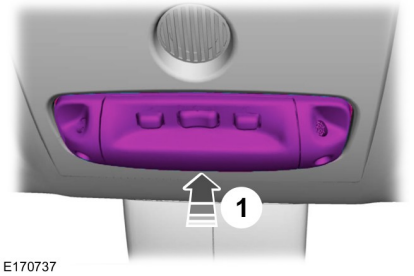

1. Use a suitable tool, for example a screwdriver, to carefully remove the lamp.

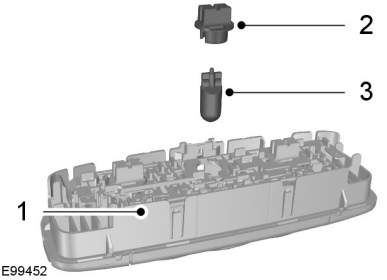

2. Turn the bulb holder counterclockwise and remove it.
3. Remove the bulb.

Reading Lamps

Note: *Do not remove the lamp lens.*

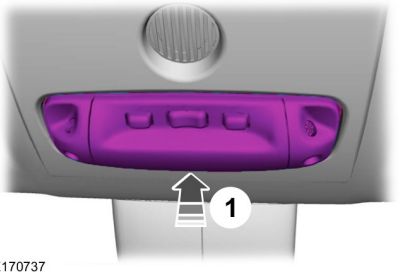

1. Use a suitable tool, for example a screwdriver, to carefully remove the lamp.

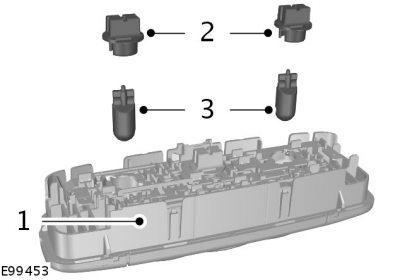

2. Turn the bulb holder counterclockwise and remove it.
3. Remove the bulb.

Fiesta (CCN) Vehicles Built From: 12-01-2015 Vehicles Built Up To: 14-10-2015, CG3582en enGBR, Edition date: 12/2014, First Printing

Luggage Compartment Lamp, Footwell Lamp and Liftgate Lamp

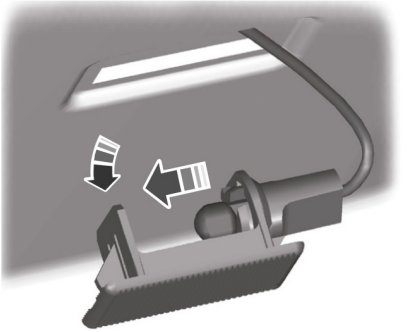

E72784

1. Carefully pry out the lamp.
2. Remove the bulb.

BULB SPECIFICATION CHART

Lamp	Specification	Power (watt)
Front direction indicator	PY21W	21
Headlamp high beam and daytime running lamp	H15	55/15
Headlamp low beam	H7	55
Front fog lamp	H11	55
Side lamp	W5W	5
Side repeater	WY5W	5
Rear direction indicator	PY21W	21
Brake and tail lamp	P21/5W	21/5
Rear fog lamp	P21W	21
Reversing lamp	W16W	16
License plate lamp	W5W	5

Fiesta (CCN) Vehicles Built From: 12-01-2015 Vehicles Built Up To: 14-10-2015, CG3582en enGBR, Edition date: 12/2014, First Printing

Lamp	Specification	Power (watt)
Interior lamp	W6W	6
Reading lamp	W5W	5
Luggage compartment lamp	W5W	5

Note: *On some vehicles the lamps are LED. These are not serviceable items, please consult your dealer if they fail.*

TECHNICAL SPECIFICATIONS

Vehicle Fluids

Note: *Use fluids which meet the specifications or requirements defined. Use of other fluids may lead to damage which is not covered by the vehicle warranty.*

Item	Specification	Viscosity Grade	Recommended fluid
Engine oil - gasoline engines only	WSS-M2C948-B	5W-20	Castrol or Ford Engine Oil
Alternative engine oil - gasoline engines only except 1.0L EcoBoost	WSS-M2C913-C	5W-30	Castrol or Ford Engine Oil
Engine oil - 1.5L diesel engines only	WSS-M2C950-A	0W-30	Castrol or Ford Engine Oil
Engine oil - 1.6L diesel engines only	WSS-M2C913-C	5W-30	Castrol or Ford Engine Oil

Fiesta (CCN) Vehicles Built From: 12-01-2015 Vehicles Built Up To: 14-10-2015, CG3582en enGBR, Edition date: 12/2014, First Printing

Item	Specification	Viscosity Grade	Recommended fluid
Antifreeze	WSS-M97B44-D	-	Motorcraft SuperPlus Antifreeze
Brake fluid	WSS-M6C65-A2	-	Motorcraft or Ford DOT 4 LV High Performance Brake Fluid

Your engine has been designed to be used with Castrol and Ford Engine Oil, which gives a fuel economy benefit whilst maintaining the durability of the engine.

Adding oil: If you are unable to find an oil that meets the specification defined by WSS-M2C913-C or WSS-M2C948-B (gasoline and 1.6L diesel engines only), you must use SAE 5W-30 that meets the specification defined by ACEA A5/B5.

Adding oil: If you are unable to find an oil that meets the specification defined by WSS-M2C950-A (1.6L diesel engines only), you must use SAE 0W-30 that meets the specification defined by ACEA C2. Alternatively you can use SAE 5W-30 that meets the specification defined by WSS-M2C913-C or ACEA A5/B5.

Note: *Do not use more than 1.1 (1 L) of the alternative engine oil between scheduled service intervals.*

Using oils other than the one specified can result in longer engine cranking periods, reduced engine performance and reduced fuel economy.

Castrol engine oil recommended.

Variant	Item	Capacity in gallons (liters)
All	Windshield and rear window washer system	0.6 (2.5)
All	Engine cooling system	1.3 (5.8)
All	Fuel tank	9.4 (42.8)
1.0L EcoBoost	Engine lubrication system - including the oil filter	1.01 (4.6)

Fiesta (CCN) Vehicles Built From: 12-01-2015 Vehicles Built Up To: 14-10-2015, CG3582en enGBR, Edition date: 12/2014, First Printing

Variant	Item	Capacity in gallons (liters)
1.0L EcoBoost	Engine lubrication system - excluding the oil filter	0.97 (4.4)
1.25L Duratec-16V	Engine lubrication system - including the oil filter	0.9 (4.1)
1.25L Duratec-16V	Engine lubrication system - excluding the oil filter	0.8 (3.8)
1.4L Duratec-16V	Engine lubrication system - including the oil filter	0.9 (4.1)
1.4L Duratec-16V	Engine lubrication system - excluding the oil filter	0.8 (3.8)
1.6L Duratec-16V Ti-VCT	Engine lubrication system - including the oil filter	0.9 (4.1)
1.6L Duratec-16V Ti-VCT	Engine lubrication system - excluding the oil filter	0.8 (3.8)
1.6L EcoBoost	Engine lubrication system - including the oil filter	0.9 (4.1)
1.6L EcoBoost	Engine lubrication system - excluding the oil filter	0.8 (3.8)
1.5L Duratorq-TDCi	Engine lubrication system - including the oil filter	0.85 (3.9)

Fiesta (CCN) Vehicles Built From: 12-01-2015 Vehicles Built Up To: 14-10-2015, CG3582en enGBR, Edition date: 12/2014, First Printing

Variant	Item	Capacity in gallons (liters)
1.5L Duratorq-TDCi	Engine lubrication system - excluding the oil filter	0.75 (3.5)
1.6L Duratorq-TDCi	Engine lubrication system - including the oil filter	0.85 (3.9)
1.6L Duratorq-TDCi	Engine lubrication system - excluding the oil filter	0.75 (3.5)

Engine Oil Adding Capacities

Engine	Capacity in gallons (liters)
1.0L EcoBoost	0.17 (0.75)
1.25L Duratec-16V	0.17 (0.75)
1.4L Duratec-16V	0.17 (0.75)
1.6L Duratec-16V Ti-VCT	0.17 (0.75)
1.6L EcoBoost	0.17 (0.75)
1.5L Duratorq-TDCi	0.33 (1.5)
1.6L Duratorq-TDCi	0.33 (1.5)

Fiesta (CCN) Vehicles Built From: 12-01-2015 Vehicles Built Up To: 14-10-2015, CG3582en enGBR, Edition date: 12/2014, First Printing

CLEANING THE EXTERIOR

Note: *If you use a car wash with a waxing cycle, make sure that you remove the wax from the windshield and the wiper blades.*

Note: *Prior to using a car wash facility check the suitability of it for your vehicle.*

Note: *Some car washes use water at high pressure. Due to this, water droplets may enter inside your vehicle and could also damage certain parts of your vehicle.*

Note: *Remove the aerial before using an automatic car wash.*

Note: *Switch the heater blower off to prevent contamination of the fresh air filter.*

We recommend that you wash your vehicle with a sponge and lukewarm water containing a car shampoo.

Cleaning the Headlamps

Note: *Do not scrape the headlamp lenses or use abrasives, alcoholic solvents or chemical solvents to clean them.*

Note: *Do not wipe the headlamps when they are dry.*

Cleaning the Rear Window

Note: *Do not scrape the inside of the rear window or use abrasives or chemical solvents to clean it.*

Use a clean, lint free cloth or a damp chamois leather to clean the inside of the rear window.

Cleaning the Chrome Trim

Note: *Do not use abrasives or chemical solvents. Use soapy water.*

Note: *Do not apply cleaning product to hot surfaces and do not leave cleaning product on chrome surfaces for a period of time exceeding that which is recommended.*

Note: *Industrial-strength (heavy-duty) cleaners, or cleaning chemicals, may cause damage over a period of time.*

Body Paintwork Preservation

WARNINGS

Do not polish your vehicle in strong sunshine.

Do not allow polish to touch plastic surfaces. It could be difficult to remove.

Do not apply polish to the windshield or rear window. This could cause the wipers to become noisy and they may not clear the window properly.

We recommend that you wax the paintwork once or twice a year.

CLEANING THE INTERIOR

Note: *Do not allow air fresheners and hand sanitizers to spill on interior surfaces. If a spill occurs, wipe off immediately. Damage may not be covered by your warranty.*

Safety Belts

Note: *Do not use abrasives, or chemical solvents to clean them.*

Note: *Do not allow moisture to penetrate the safety belt retractor mechanism.*

Clean them with interior cleaner or water applied with a soft sponge. Let them dry naturally, away from artificial heat.

Instrument Cluster Screens, LCD Screens and Radio Screens

Note: *Do not use abrasives, alcoholic solvents or chemical solvents to clean them.*

Fiesta (CCN) Vehicles Built From: 12-01-2015 Vehicles Built Up To: 14-10-2015, CG3582en enGBR, Edition date: 12/2014, First Printing

Rear Windows

Note: *Do not use any abrasive materials to clean the interior of the rear windows.*

Note: *Do not install stickers or labels to the interior of the rear windows.*

REPAIRING MINOR PAINT DAMAGE

You should repair paintwork damage caused by stones from the road or minor scratches as soon as possible. A choice of products are available from an authorized dealer.

Remove particles such as bird droppings, tree sap, insect deposits, tar spots, road salt and industrial fallout before repairing paint chips.

Always read and follow the manufacturer's instructions before using the products.

CLEANING THE ALLOY WHEELS

Note: *Do not apply a cleaning chemical to warm or hot wheel rims and covers.*

Note: *Industrial-strength (heavy-duty) cleaners, or cleaning chemicals, in combination with brush agitation to remove brake dust and dirt, could wear away the clear coat finish over a period of time.*

Note: *Do not use hydrofluoric acid-based or high caustic-based wheel cleaners, steel wool, fuels or strong household detergent.*

Note: *If you intend parking your vehicle for an extended period after cleaning the wheels with a wheel cleaner, drive your vehicle for a few minutes before doing so. This will reduce the risk of increased corrosion of the brake discs, brake pads and linings.*

Note: *Some automatic car washes may cause damage to the finish on your wheel rims and covers.*

Alloy wheels and wheel covers are coated with a clear coat paint finish. To maintain their condition we recommend that you:

- Clean them weekly with the recommended wheel and tire cleaner.
- Use a sponge to remove heavy deposits of dirt and brake dust accumulation.
- Rinse them thoroughly with a pressurized stream of water when you have completed the cleaning process.

We recommend that you use Ford service wheel cleaner. Make sure that you read and follow the manufacturer's instructions.

Using other non-recommended cleaning products can result in severe and permanent cosmetic damage.

Fiesta (CCN) Vehicles Built From: 12-01-2015 Vehicles Built Up To: 14-10-2015, CG3582en enGBR, Edition date: 12/2014, First Printing

GENERAL INFORMATION

A decal with tire pressure data is located in the driver's door opening.

Check and set the tire pressure at the ambient temperature in which you are intending to drive your vehicle and when the tires are cold.

Note: *Check your tire pressures regularly to optimize fuel economy.*

Note: *Use only approved wheel and tire sizes. Using other sizes could damage your vehicle and will make the National Type Approval invalid.*

Note: *If you change the diameter of the tires from that fitted at the factory, the speedometer may not display the correct speed. Take your vehicle to an authorized dealer to have the engine management system reprogrammed.*

Note: *If you intend to change the size of the wheels from that fitted at the factory, check the suitability with an authorized dealer.*

TEMPORARY MOBILITY KIT

Your vehicle may not have a spare tire. Therefore you will have a temporary mobility kit which will only repair one damaged tire.

The kit is located in the spare wheel well.

General Information

WARNINGS

Depending on the type and extent of tire damage, some tires can only be partially sealed or not sealed at all. Loss of tire pressure can affect vehicle handling, leading to loss of vehicle control.

Do not use the kit on a previously damaged tire, for example when it has been driven under inflated.

WARNINGS

Do not use the kit on run flat tires.

Do not try to seal damage to the tire's sidewall.

The kit seals most tire punctures [with a diameter of up to ¼ inch (six millimeters)] to temporarily restore mobility.

You must observe the following rules when using the kit:

- Drive with caution and avoid making sudden steering or driving manoeuvres, especially if your vehicle is heavily laden or you are towing a trailer.
- The kit will provide you with an emergency temporary repair, enabling you to continue your journey to the next vehicle or tire dealer, or to drive a maximum distance of 125 miles (200 kilometers).
- Do not exceed a maximum speed of 50 mph (80 km/h).
- Keep the kit out of the reach of children.
- Only use the kit when the ambient temperature is between -40ºF (–40ºC) and +158ºF (+70ºC).

Using the Kit

WARNINGS

Compressed air can act as an explosive or propellant.

Never leave the kit unattended while in use.

Do not keep the compressor operating for more than 10 minutes.

You must only use the kit for the vehicle with which it was supplied.

Fiesta (CCN) Vehicles Built From: 12-01-2015 Vehicles Built Up To: 14-10-2015, CG3582en enGBR, Edition date: 12/2014, First Printing

- Park your vehicle at the roadside so that you do not obstruct the flow of traffic and so that you are able to use the kit without being in danger.
- Apply the parking brake, even if you have parked on a level road, to make sure that your vehicle will not move.
- Do not attempt to remove foreign objects like nails or screws penetrating the tire.
- Leave the engine running while the kit is in use, but not if your vehicle is in an enclosed or poorly ventilated area (e.g, inside a building). In these circumstances, switch the compressor on with the engine switched off.
- You must replace the sealant bottle with a new one before the expiry date (see top of bottle).
- Inform all other users of your vehicle that the tire has been temporarily sealed with the kit. Make them aware of the special driving conditions that must be observed.

Inflating the Tire

WARNINGS

Check the sidewall of the tire prior to inflation. If there are any cracks, bumps or similar damage, do not attempt to inflate the tire.

Do not stand directly beside the tire while the compressor is operating.

Watch the sidewall of the tire. If any cracks, bumps or similar damage appears, switch off the compressor and let the air out by means of the pressure relief valve I. Do not continue driving with this tire.

The sealant contains natural rubber latex. Avoid contact with skin and clothing. If this happens, rinse the affected areas immediately with plenty of water and contact a Physician.

WARNINGS

If the tire inflation pressure does not reach 26 psi (1.8 bar) within 10 minutes, the tire may have suffered excessive damage, making a temporary repair impossible. Do not continue driving with this tire.

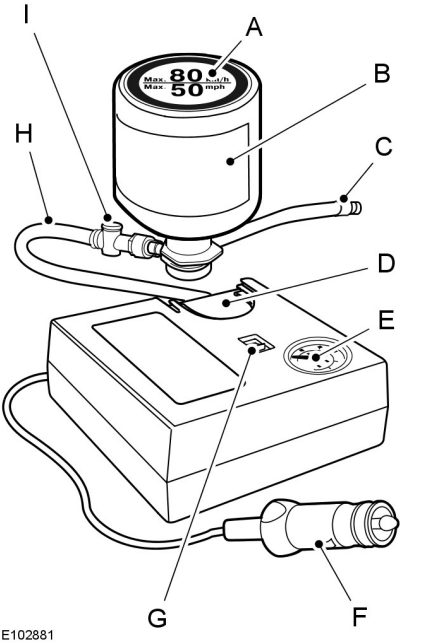

A	Label
B	Sealant bottle
C	Sealant bottle hose
D	Bottle holder
E	Pressure gauge
F	Power plug with cable
G	Compressor switch

Fiesta (CCN) Vehicles Built From: 12-01-2015 Vehicles Built Up To: 14-10-2015, CG3582en enGBR, Edition date: 12/2014, First Printing

H Repair kit hose

I Pressure relief valve

1. Remove the kit from the wrapping.
2. Peel off the label A showing the maximum permissible speed of 50 mph (80 km/h) from the sealant bottle and attach it to the instrument panel in the driver's field of view. Make sure the label does not obscure anything important.
3. Take the hose H with the pressure relief valve I and the power plug with cable F out of the kit.
4. Connect the hose H with the pressure relief valve I to the sealant bottle B.
5. Engage the sealant bottle B into the bottle holder D.
6. Remove the valve cap from the damaged tire.
7. Screw the sealant bottle hose C firmly onto the valve of the damaged tire.
8. Make sure that the compressor switch G is in position 0.
9. Insert the power plug F into the cigar lighter socket or auxiliary power socket. See **Auxiliary Power Points** (page 94). See **Cigar Lighter** (page 94).
10. Start the engine.
11. Move the compressor switch G to position 1.
12. Inflate the tire for no longer than 10 minutes to an inflation pressure of minimum 26 psi (1.8 bar) and a maximum of 51 psi (3.5 bar). Move the compressor switch G to position 0 and check the current tire pressure with pressure gauge E.

Note: *If a tire pressure of 26 psi (1.8 bar) is not reached do not continue.*

Note: *When pumping in the sealant through the tire valve, the pressure may rise up to 87 psi (6 bar) but will drop again after about 30 seconds.*

Note: *After you have switched the compressor off, you may hear air escaping from the damaged tire. This is normal and can be ignored provided that the specified minimum tire pressure has been reached.*

13. Remove the power plug F from the cigar lighter socket or auxiliary power socket.
14. Quickly unscrew the hose C from the tire valve. Fasten the valve cap again.

Note: *Some residual sealant fluid may drip or spray out of hose C while you are disconnecting it. This is normal.*

15. Leave the sealant bottle B in the bottle holder D.
16. Make sure the kit is stored safely, but still easily accessible in your vehicle. The kit will be required again when you check the tire pressure.
17. Immediately drive approximately two miles (three kilometers) so that the sealant can seal the damaged area.

WARNING

If you experience heavy vibrations, unsteady steering behaviour or noises while driving, reduce your speed and drive with caution to a place where it is safe for you to stop your vehicle. Recheck the tire and its pressure. If the tire pressure is less than 14.7 psi (1 bar) or if there are any cracks, bumps or similar damage visible, do not continue driving with this tire.

18. Stop your vehicle after driving approximately two miles (three kilometers). Check, and where necessary, adjust the pressure of the damaged tire.

Fiesta (CCN) Vehicles Built From: 12-01-2015 Vehicles Built Up To: 14-10-2015, CG3582en enGBR, Edition date: 12/2014, First Printing

19. Attach the kit and read the tire pressure from the pressure gauge E.
20. Adjust it to the specified pressure. See **Technical Specifications** (page 194).
21. Once you have inflated the tire to its correct tire pressure, move the compressor switch G to position 0, remove the power plug F from the socket, unscrew the hose C and fasten the valve cap.
22. Leave hose C and H connected to the sealant bottle B and store the kit away safely.
23. Go to the nearest tire specialist to get the damaged tire replaced. Before the tire is removed from the rim, inform your tire dealer that the tire contains sealant. You must renew the sealant bottle B and hose C as soon as possible once used.

Note: *Remember that the kit only provides temporary mobility. Regulations concerning tire repair after using the kit may differ from country to country. You should consult a tire specialist for advice.*

WARNING

Before driving, make sure the tire is adjusted to the recommended inflation pressure. See **Technical Specifications** (page 194). You must, monitor the tire pressure until the sealed tire is replaced.

Empty sealant bottles can be disposed of together with normal household waste. Return remains of sealant to an authorized dealer or dispose of it in compliance with local waste disposal regulations.

TIRE CARE

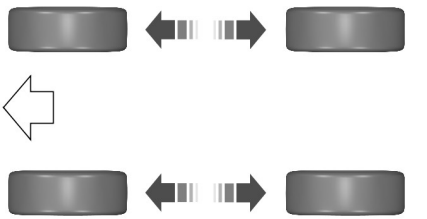

E70415

To make sure the front and rear tires of your vehicle wear evenly and last longer, we recommend that you swap the tires from front to rear and vice versa at regular intervals of between 3000 and 6000 miles (5000 and 10000 kilometers).

WARNING

Do not scrub the sidewalls of the tires when you are parking.

If you have to mount a curb, do so slowly and approach it with the wheels at right-angles to the curb.

Examine the tires regularly for cuts, foreign objects and uneven wear of the tread. Uneven wear could mean that the wheel alignment is outside specification.

Check the tire pressures (including the spare) when cold, every two weeks.

USING WINTER TIRES

If winter tires are used you must inflate them to the same tire pressures as those listed in the tire pressure table. See **Technical Specifications** (page 194).

Fiesta (CCN) Vehicles Built From: 12-01-2015 Vehicles Built Up To: 14-10-2015, CG3582en enGBR, Edition date: 12/2014, First Printing

USING SNOW CHAINS

WARNINGS

Do not exceed 30 mph (50 km/h).

Do not use snow chains on snow-free roads.

Only fit snow chains to specified tires. See **Technical Specifications** (page 194).

If your vehicle has wheel trims, remove them before fitting snow chains.

Only use snow chains of 10 millimeters or smaller.

Only use snow chains on the front wheels.

Note: *The anti-lock braking system will continue to operate normally.*

Vehicles with Stability Control

When stability control is on, your vehicle may exhibit some unusual driving characteristics. To reduce this, switch traction control off. See **Using Stability Control** (page 117).

TIRE PRESSURE MONITORING SYSTEM - VEHICLES BUILT FROM: 07-04-2014

WARNING

The tire pressure monitoring system is not a substitute for manually checking tire pressures. You should periodically check tire pressures using a pressure gauge. Failure to correctly maintain tire pressures could increase the risk of tire failure, loss of control, vehicle rollover and personal injury.

You must check the tire pressures (including the spare tire where applicable) every two weeks when the tires are cold.

You must inflate the tires to the correct pressure.

See **Wheels and Tires** (page 182). The tire pressures are also on the tire inflation pressure label (located on the edge of driver door or the B-Pillar).

As a driver assistance feature, your vehicle has a tire pressure monitoring system. A warning lamp will illuminate when one or more of the tires are significantly under-inflated. If the low tire pressure warning lamp illuminates, you should stop your vehicle as soon as it is safe to do so, check the tires and inflate them to the correct pressure.

Driving on under-inflated tires can:

- Cause them to overheat.
- Lead to tire failure.
- Reduce fuel efficiency.
- Reduce tire life.
- Affect vehicle handling or stopping ability.

The system is not a substitute for correct tire maintenance.

You must maintain the correct tire pressures, even if low tire pressure has not illuminated the warning lamp.

The tire pressure monitoring system has a system malfunction indicator to warn you when the system is not operating correctly. The malfunction indicator and low tire pressure warning lamp have a combined function. When the system detects a

Fiesta (CCN) Vehicles Built From: 12-01-2015 Vehicles Built Up To: 14-10-2015, CG3582en enGBR, Edition date: 12/2014, First Printing

malfunction, the warning lamp will flash for approximately one minute and then remain illuminated. This sequence will occur every time you switch the ignition on while the malfunction remains. The system has detected a fault that requires service.

When the malfunction indicator is illuminated, the system may not be able to detect or signal low tire pressures. A malfunction may occur for a variety of reasons, including the installation of a replacement tire or wheel that prevents the system from functioning correctly. Always check the tire pressure monitoring system malfunction warning after replacing one or more tires or wheels on your vehicle. Make sure the replacement tires or wheels allow the system to continue to function correctly. See **When the Temporary Spare Tire is Installed** in this section.

Changing Tires With a Tire Pressure Monitoring System

You should always have tires serviced by an authorized dealer.

Note: *Each road wheel and tire is fitted with a tire pressure sensor located inside the wheel and tire assembly cavity. The pressure sensor attaches to the valve stem. The tire covers the pressure sensor and it is not visible unless the tire is removed. Take care when changing the tire to avoid damaging the sensor.*

Understanding the Tire Pressure Monitoring System

The system measures the pressure in the four road tires and sends the tire pressure readings to your vehicle.

The system detects this lower pressure as being significantly below the correct inflation pressure and the warning lamp illuminates. You must inflate the tires to the correct pressure.

When the Temporary Spare Tire is Installed

If you need to replace a road wheel and tire with the temporary spare wheel, the system will continue to identify a defect. This is to remind you to repair the damaged road wheel and tire and refit the repaired road wheel and tire assembly to your vehicle. To restore the correct operation of the system, you must have the repaired road wheel and tire assembly refitted to your vehicle. For additional information, see **Changing Tires with a Tire Pressure Monitoring System** in this section.

When You Believe the System is Not Operating Correctly

The main function of the system is to warn you when the tire pressures are low. It can also warn you in the event the system is no longer capable of operating correctly. See the following chart for information concerning the system:

Fiesta (CCN) Vehicles Built From: 12-01-2015 Vehicles Built Up To: 14-10-2015, CG3582en enGBR, Edition date: 12/2014, First Printing

Warning lamp	Description	Action
Solid warning lamp	Tire(s) under-inflated	1. Make sure tires are at the correct pressure. See **Wheels and Tires** (page 182). The tire pressures are also on the tire inflation pressure label (located on the edge of driver door or the B-Pillar). 2. After inflating the tires to the correct pressure you must carry out the tire pressure monitoring system reset procedure. See **Tire Pressure Monitoring System Reset Procedure** in this chapter.
	Spare tire in use	Repair the damaged road wheel and tire and refit the repaired road wheel and tire assembly to your vehicle to restore the correct operation of the system.
	Tire pressure monitoring system malfunction	If the tires are correctly inflated and the spare tire is not in use but the light remains on, the system has detected a fault that requires service.
Flashing warning lamp	Spare tire in use	Repair the damaged road wheel and tire and refit the repaired road wheel and tire assembly to your vehicle to restore the correct operation of the system.
	Tire pressure monitoring system malfunction	If the tires are correctly inflated and the spare tire is not in use but the light remains on, the system has detected a fault that requires service.

Tire Pressure Monitoring System Reset Procedure

Overview

You must carry out the system reset procedure after each tire replacement or adjustment of the tire pressures.

To maintain your vehicle load carrying capability, your vehicle requires different tire pressures in the front tires compared to the rear tires.

The system illuminates the warning lamp at different pressures for the front and rear tires.

Fiesta (CCN) Vehicles Built From: 12-01-2015 Vehicles Built Up To: 14-10-2015, CG3582en enGBR, Edition date: 12/2014, First Printing

The tires need to be periodically rotated to provide consistent performance and maximum tire life, the system needs to know when the tires have been rotated to determine which set of tires are on the front and rear axles. With this information, the system can detect and correctly warn of low tire pressures.

Carrying Out the System Reset Procedure

Switch the ignition on. Using the information display control select:

Message	Description and Action
Vehicle settings	
Tyre pressure sys	Press and hold the **OK** button until confirmation appears. Alternatively, if your vehicle has a tire pressure monitoring system reset button, press and hold the button until confirmation appears.

How Temperature Affects the Tire Pressures

Under normal driving conditions tire pressures may increase by up to 4 psi (0.3 bar) from a cold start situation.

If the vehicle is stationary overnight and the temperature significantly lower than the daytime temperature, tire pressures may decrease by up to 3 psi (0.2 bar) when there is a drop in the ambient temperature of 31ºF (17ºC) or more. The system detects this pressure decrease as being significantly below the correct inflation pressure and the warning lamp illuminates.

When Inflating the Tires

When inflating the tires the system may not respond immediately to the air added to the tires.

If the Warning Lamp is On:

1. Check each tire to verify that none are flat.
2. If one or more tires are flat, repair as necessary.
3. Check the tire pressures and inflate all the tires to the correct pressure.
4. Carry out the tire pressure monitoring system reset procedure.

CHANGING A ROAD WHEEL

Lug Nuts

You can obtain replacement locking lug nuts or a locking lug nut key using the reference number certificate.

Vehicles with a Spare Wheel

WARNINGS

If the spare wheel is fitted to your vehicle, drive the shortest distance possible.

Do not fit more than one spare wheel on your vehicle at any one time.

Do not carry out any tire repairs on a spare wheel.

If you are not sure what type of spare wheel your vehicle has, do not exceed 50 mph (80 km/h).

Only fit snow chains to specified tires. See **Technical Specifications** (page 194).

Fiesta (CCN) Vehicles Built From: 12-01-2015 Vehicles Built Up To: 14-10-2015, CG3582en enGBR, Edition date: 12/2014, First Printing

If the spare wheel is the same type and size as your vehicle road wheel, you can fit the spare wheel and continue to drive in the normal manner.

If the spare wheel is not the same type and size as your vehicle road wheel, it has a label showing the maximum driving speed limit.

Refer to the following information before changing the road wheel.

Note: *The spare wheel is located under the floor cover in the luggage compartment.*

Note: *Your vehicle may exhibit some different driving characteristics if you fit the spare wheel.*

Note: *The ground clearance of your vehicle may be reduced when the spare wheel is fitted. Take care when parking next to a curb.*

Note: *If the spare wheel is fitted to your vehicle, do not drive through an automatic car wash.*

Vehicle Jack

WARNINGS

Do not use the vehicle jack other than when you are changing a wheel in an emergency.

WARNINGS

Check that the vehicle jack is not damaged or deformed and the thread is lubricated and clean.

Never place anything between the vehicle jack and the ground.

Never place anything between the vehicle jack and your vehicle.

Note: *Vehicles with a temporary mobility kit do not have a spare wheel, vehicle jack or wheel brace.*

When changing between summer and winter tires, use a hydraulic floor jack.

Note: *Use a jack with a minimum lifting capacity of 1.5 tonnes and a lifting plate with a minimum diameter of 3.1 in (80 mm).*

Vehicles without a Temporary Mobility Kit

The vehicle jack, wheel brace, screw-in towing eye and wheel trim remover are located in the spare wheel well.

Jacking and Lifting Points

WARNING

You must use the specified jacking points.

Fiesta (CCN) Vehicles Built From: 12-01-2015 Vehicles Built Up To: 14-10-2015, CG3582en enGBR, Edition date: 12/2014, First Printing

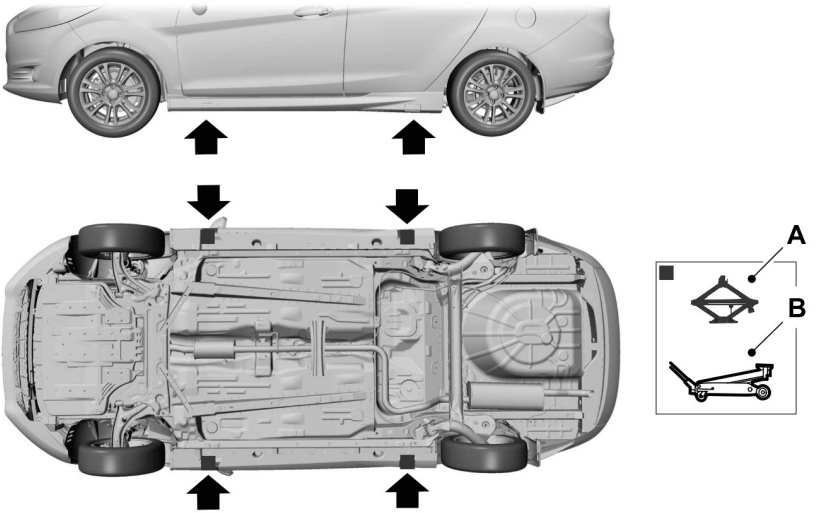

E92658

A Emergency use only.

B Maintenance.

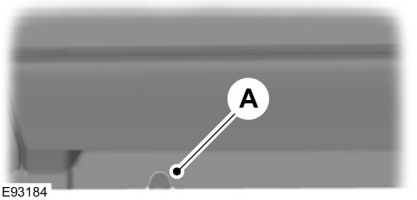

E93184

Indentations in the sills show the location of the jacking points.

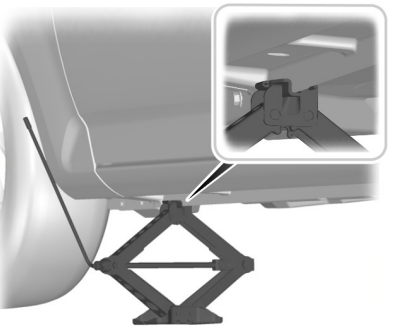

E92932

Fiesta (CCN) Vehicles Built From: 12-01-2015 Vehicles Built Up To: 14-10-2015, CG3582en enGBR, Edition date: 12/2014, First Printing

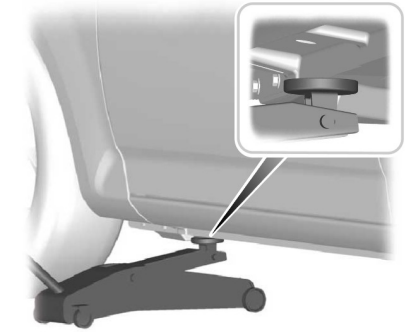

E93020

Vehicles with Side Skirts

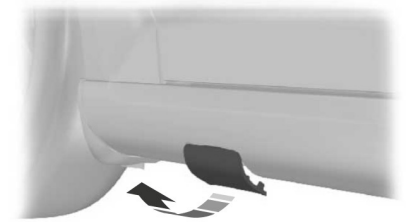

E95345

Assembling the Wheel Brace

WARNING

The screw-in towing eye has a left-hand thread. Turn it counterclockwise to install it. Make sure that the towing eye is fully tightened.

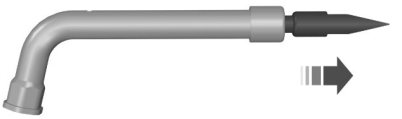

E122546

E122502

Insert the screw-in towing eye into the wheel brace.

Removing the Wheel Trim

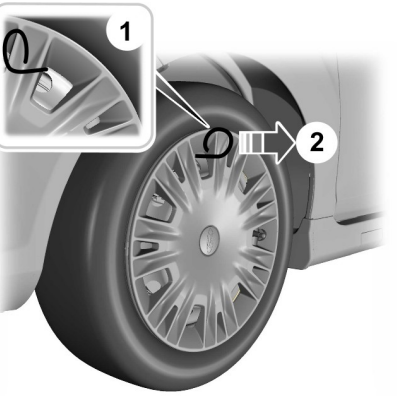

E122314

1. Insert the wheel trim remover.
2. Remove the wheel trim.

Note: *Make sure that you pull the wheel trim remover at right angles to the wheel trim.*

Fiesta (CCN) Vehicles Built From: 12-01-2015 Vehicles Built Up To: 14-10-2015, CG3582en enGBR, Edition date: 12/2014, First Printing

Removing a Road Wheel

WARNINGS

Park your vehicle so that you do not obstruct the flow of traffic or place yourself in any danger and set up a warning triangle.

Make sure that your vehicle is on firm and level ground with the front wheels pointing straight ahead.

Switch the ignition off and apply the parking brake.

If your vehicle has a manual transmission, move the gearshift lever to first or reverse gear. If it has an automatic transmission, move the gearshift lever to park **(P)**.

Make sure all passengers are out of your vehicle.

Chock the diagonally opposite wheel to the punctured tire with an appropriate wheel block or wheel chock.

Do not work on your vehicle when the jack is the only support. If the vehicle slips off the jack, you or someone else could be seriously injured.

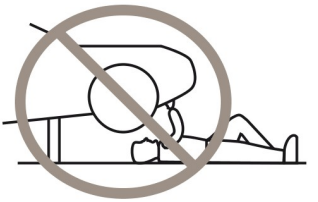

E166722

WARNING

Make sure that the vehicle jack is vertical to the jacking point and the base is flat on the ground.

1. Install the locking lug nut key.

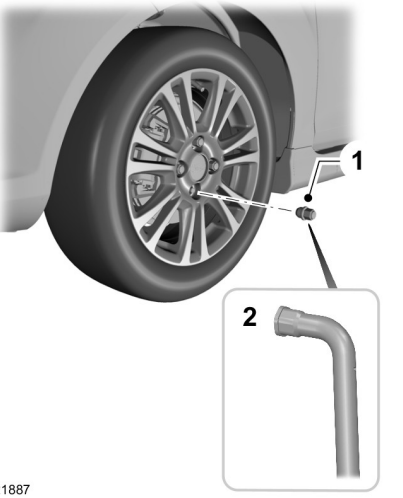

E121887

2. Loosen the lug nuts.
3. Raise your vehicle until the tire is clear of the ground.
4. Remove the lug nuts and the road wheel.

Note: *Do not lay alloy wheels face down on the ground, this will damage the paint.*

Installing a Road Wheel

WARNINGS

Make sure that the arrows on directional tires point in the direction of rotation when your vehicle is moving forward. If you have to fit a spare tire with the arrows pointing in the opposite direction have the tire refitted as soon as possible.

Use only approved wheel and tire sizes. Using other sizes could damage the vehicle and will make the National Type Approval invalid. See **Technical Specifications** (page 194).

Fiesta (CCN) Vehicles Built From: 12-01-2015 Vehicles Built Up To: 14-10-2015, CG3582en enGBR, Edition date: 12/2014, First Printing

WARNINGS

Make sure there is no grease or oil on the threads or the surface between the wheel lugs and nuts. This can cause the lug nuts to loosen while driving.

Do not fit run flat tires on vehicles that were not originally fitted with them. Contact an authorized dealer for more details about compatibility.

WARNINGS

Do not install alloy wheels using lug nuts designed for use with steel wheels.

Lug nuts are subject to change. You must make sure that you use only the specific lug nuts and wheels supplied with your vehicle. If in doubt please contact your authorized dealer.

Note: *The lug nuts of alloy wheels and spoked steel wheels can also be used for the steel spare wheel for a short time (maximum two weeks).*

Note: *Make sure that the cones on the lug nuts are against the wheel.*

1. Install the wheel.
2. Install the lug nuts finger tight.
3. Install the locking lug nut key.

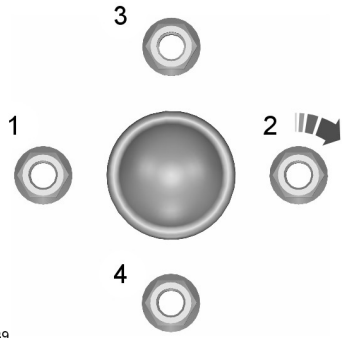

E90589

4. Install all of the lug nuts and partially tighten them in the sequence shown.
5. Lower your vehicle and remove the vehicle jack.
6. Fully tighten all of the lug nuts in the sequence shown. See **Technical Specifications** (page 194).
7. Install the wheel trim.

WARNING

Have the lug nuts checked for tightness and the tire pressure checked as soon as possible.

TECHNICAL SPECIFICATIONS

Wheel Lug Nut Torque

Wheel Type	lb.ft (Nm)
All	100 lb.ft (135 Nm)

Fiesta (CCN) Vehicles Built From: 12-01-2015 Vehicles Built Up To: 14-10-2015, CG3582en enGBR, Edition date: 12/2014, First Printing

Tire Pressures (Cold Tires)

Up to 50mph (80km/h)

Vehicle Load		Normal		Full	
Tire Position		Front	Rear	Front	Rear
Variant	Tire Size	psi (bar)	psi (bar)	psi (bar)	psi (bar)
Temporary spare wheel when it differs from the other fitted wheels	175/65 R14-T	46 (3.2)	46 (3.2)	46 (3.2)	46 (3.2)

Up to 100mph (160km/h)

Vehicle Load		Normal		Full	
Tire Position		Front	Rear	Front	Rear
Variant	Size	psi (bar)	psi (bar)	psi (bar)	psi (bar)
All gasoline engines with manual transmission except 1.6L EcoBoost	175/65 R14*	30 (2.1)	26 (1.8)	36 (2.5)	46 (3.2)
All gasoline engines with automatic transmission	175/65 R14*	33 (2.3)	26 (1.8)	36 (2.5)	46 (3.2)
All diesel engines	175/65 R14*	33 (2.3)	26 (1.8)	36 (2.5)	46 (3.2)
1.0L EcoBoost and 1.5L Duratec-16V Ti-VCT	185/55 R15	30 (2.1)	26 (1.8)	35 (2.4)	46 (3.2)
All gasoline engines with manual transmission except 1.6L EcoBoost	195/50 R15	30 (2.1)	26 (1.8)	35 (2.4)	46 (3.2)
All gasoline engines with automatic transmission	195/50 R15	33 (2.3)	26 (1.8)	35 (2.4)	46 (3.2)
All diesel engines	195/50 R15	33 (2.3)	26 (1.8)	35 (2.4)	46 (3.2)
1.25L Duratec-16V and 1.4L Duratec-16V	195/55 R15	30 (2.1)	26 (1.8)	35 (2.4)	46 (3.2)
All engines except 1.25L Duratec-16V, 1.4L Duratec-16V and 1.6L EcoBoost	195/55 R15	33 (2.3)	26 (1.8)	35 (2.4)	46 (3.2)

Fiesta (CCN) Vehicles Built From: 12-01-2015 Vehicles Built Up To: 14-10-2015, CG3582en enGBR, Edition date: 12/2014, First Printing

Vehicle Load		Normal		Full	
Tire Position		Front	Rear	Front	Rear
Variant	Size	psi (bar)	psi (bar)	psi (bar)	psi (bar)
All engines except 1.6L EcoBoost	195/60 R15	30 (2.1)	26 (1.8)	35 (2.4)	38 (2.6)
1.25L Duratec-16V and 1.4L Duratec-16V	195/45 R16	32 (2.2)	26 (1.8)	38 (2.6)	46 (3.2)
All gasoline engines with automatic transmission	195/45 R16	35 (2.4)	26 (1.8)	38 (2.6)	46 (3.2)
All diesel engines	195/45 R16	35 (2.4)	26 (1.8)	38 (2.6)	46 (3.2)
1.0L EcoBoost with manual transmission	195/45 R16	33 (2.3)	26 (1.8)	38 (2.6)	46 (3.2)
1.6L EcoBoost	195/45 R16*	35 (2.4)	26 (1.8)	36 (2.5)	32 (2.2)
1.25L Duratec-16V and 1.4L Duratec-16V	195/50 R16	30 (2.1)	26 (1.8)	35 (2.4)	46 (3.2)
All engines except 1.25L Duratec-16V, 1.4L Duratec-16V and 1.6L EcoBoost	195/50 R16	33 (2.3)	26 (1.8)	35 (2.4)	46 (3.2)
All gasoline engines with manual transmission except 1.6L EcoBoost	205/40 R17	33 (2.3)	26 (1.8)	38 (2.6)	41 (2.8)
1.6L EcoBoost	205/40 R17	36 (2.5)	26 (1.8)	38 (2.6)	33 (2.3)
All gasoline engines with automatic transmission	205/40 R17	35 (2.4)	26 (1.8)	38 (2.6)	41 (2.8)
All diesel engines	205/40 R17	35 (2.4)	26 (1.8)	38 (2.6)	41 (2.8)

*Only use snow chains on specified tires.

Fiesta (CCN) Vehicles Built From: 12-01-2015 Vehicles Built Up To: 14-10-2015, CG3582en enGBR, Edition date: 12/2014, First Printing

Continuous Speed in Excess of 100mph (160km/h)

Vehicle Load		Normal		Full	
Tire Position		Front	Rear	Front	Rear
Variant	Size	psi (bar)	psi (bar)	psi (bar)	psi (bar)
All gasoline engines with manual transmission except 1.6L EcoBoost	175/65 R14	30 (2.1)	26 (1.8)	38 (2.6)	46 (3.2)
All gasoline engines with automatic transmission	175/65 R14	33 (2.3)	26 (1.8)	38 (2.6)	46 (3.2)
All diesel engines	175/65 R14	33 (2.3)	26 (1.8)	38 (2.6)	46 (3.2)
All vehicles except 1.6L EcoBoost	195/50 R15	33 (2.3)	26 (1.8)	38 (2.6)	46 (3.2)
1.25L Duratec-16V and 1.4L Duratec-16V	195/55 R15	30 (2.1)	26 (1.8)	38 (2.6)	46 (3.2)
All engines except 1.25L Duratec-16V, 1.4L Duratec-16V and 1.6L EcoBoost	195/55 R15	33 (2.3)	26 (1.8)	38 (2.6)	46 (3.2)
All engines except 1.6L EcoBoost	195/60 R15	30 (2.1)	26 (1.8)	38 (2.6)	38 (2.6)
1.25L Duratec-16V and 1.4L Duratec-16V	195/45 R16	33 (2.3)	26 (1.8)	41 (2.8)	46 (3.2)
All engines except 1.25L Duratec-16V, 1.4L Duratec-16V and 1.6L EcoBoost	195/45 R16	36 (2.5)	26 (1.8)	41 (2.8)	46 (3.2)
1.6L EcoBoost	195/45 R16*	41 (2.8)	28 (1.9)	42 (2.9)	36 (2.5)
1.25L Duratec-16V and 1.4L Duratec-16V	195/50 R16	30 (2.1)	26 (1.8)	38 (2.6)	46 (3.2)

Fiesta (CCN) Vehicles Built From: 12-01-2015 Vehicles Built Up To: 14-10-2015, CG3582en enGBR, Edition date: 12/2014, First Printing

Vehicle Load		Normal		Full	
Tire Position		Front	Rear	Front	Rear
Variant	Size	psi (bar)	psi (bar)	psi (bar)	psi (bar)
All engines except 1.25L Duratec-16V, 1.4L Duratec-16V and 1.6L EcoBoost	195/50 R16	33 (2.3)	26 (1.8)	38 (2.6)	46 (3.2)
All engines except 1.6L EcoBoost	205/40 R17	36 (2.5)	26 (1.8)	41 (2.8)	41 (2.8)
1.6L EcoBoost	205/40 R17	39 (2.7)	28 (1.9)	41 (2.8)	36 (2.5)

Fiesta (CCN) Vehicles Built From: 12-01-2015 Vehicles Built Up To: 14-10-2015, CG3582en enGBR, Edition date: 12/2014, First Printing

VEHICLE IDENTIFICATION PLATE

Note: *Your vehicle identification plate design may vary to that shown.*

Note: *The information shown on the vehicle identification plate is dependent upon market requirements.*

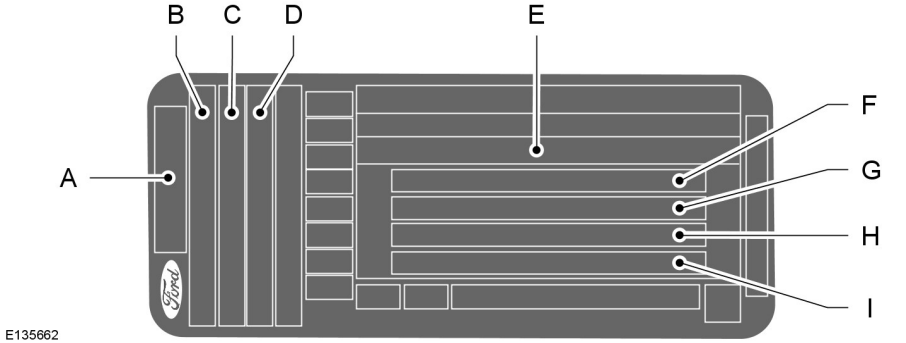

A	Model
B	Variant
C	Engine designation
D	Engine power and emission level
E	Vehicle identification number
F	Gross vehicle weight
G	Gross train weight
H	Maximum front axle weight
I	Maximum rear axle weight

Your vehicle identification number and maximum weights are shown on a plate, located at the bottom of the lock side of the right-hand door aperture.

Fiesta (CCN) Vehicles Built From: 12-01-2015 Vehicles Built Up To: 14-10-2015, CG3582en enGBR, Edition date: 12/2014, First Printing

VEHICLE IDENTIFICATION NUMBER

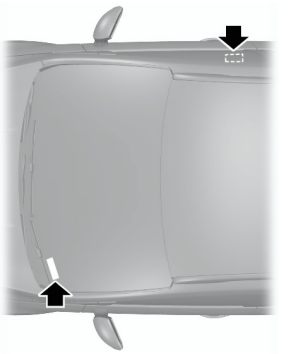

E87496

The vehicle identification number is stamped into the floor panel on the right-hand side, beside the front seat. It is also shown on the left-hand side of the instrument panel.

TECHNICAL SPECIFICATIONS

Vehicle dimensions

Dimension description	in (mm)	
Maximum length	156.8 (3,982)	
Overall width including exterior mirrors	77.9 (1,978)	
Overall height - EC curb weight	Minimum	Maximum
	56.8 (1,443)	58.9 (1,495)
Wheelbase	98.0 (2,489)	
Front track	Minimum	Maximum
	58.0 (1,472)	58.7 (1,492)
Rear track	57.5 (1,461)	58.3 (1,481)

Fiesta (CCN) Vehicles Built From: 12-01-2015 Vehicles Built Up To: 14-10-2015, CG3582en enGBR, Edition date: 12/2014, First Printing

Towing equipment dimensions

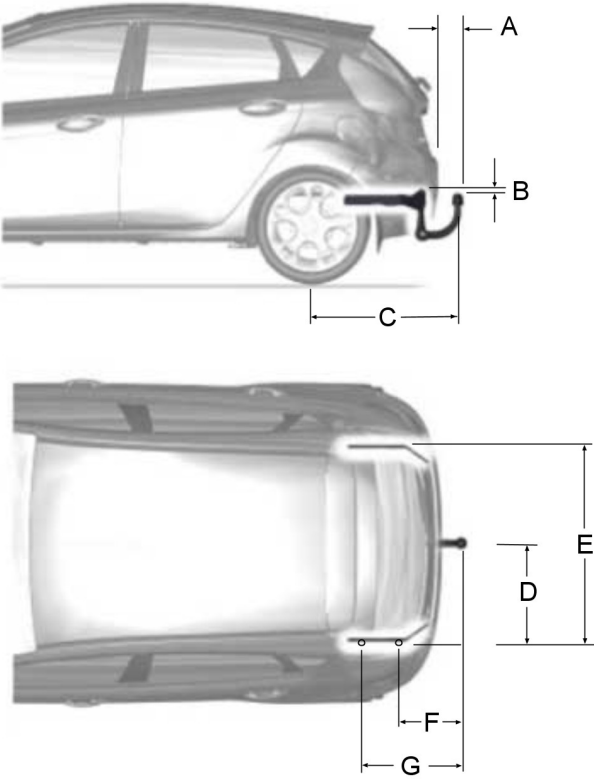

Item	Dimension description	in (mm)
A	Bumper – end of tow ball	5 (124)
B	Attachment point – center of tow ball	0 (7)
C	Wheel center – center of tow ball	30 (761)
D	Center of tow ball – side member	20 (512)

Fiesta (CCN) Vehicles Built From: 12-01-2015 Vehicles Built Up To: 14-10-2015, CG3582en enGBR, Edition date: 12/2014, First Printing

Item	Dimension description	in (mm)
E	Distance between side members	40 (1,024)
F	Center of tow ball – center 1. attachment point	12 (317)
G	Center of tow ball – center 2. attachment point	23 (584)

Fiesta (CCN) Vehicles Built From: 12-01-2015 Vehicles Built Up To: 14-10-2015, CG3582en enGBR, Edition date: 12/2014, First Printing

GENERAL INFORMATION

Radio Frequencies and Reception Factors

Radio reception factors	
Distance and Strength	The further you travel away from an FM station, the weaker the signal and the weaker the reception.
Terrain	Hills, mountains, tall buildings, bridges, tunnels, freeway overpasses, parking garages, dense tree foliage and thunderstorms can interfere with the reception.
Station overload	When you pass near a radio transmission tower, a stronger signal can override a weaker signal and can cause interference in the audio system.

CD and CD Player Information

Note: *CD units play commercially pressed 4.75-inch (12 centimeter) audio compact discs only. Due to technical incompatibility, certain recordable and re-recordable compact discs may not function correctly when used in Ford CD players.*

Note: *Do not insert CDs with homemade paper (adhesive) labels into the CD player as the label may peel and cause the CD to become jammed. You should use a permanent felt tip marker rather than adhesive labels on your homemade CDs. Ballpoint pens may damage CDs. Please contact an authorized dealer for further information.*

Note: *Do not use any irregularly shaped discs or discs with a scratch protection film attached.*

Always handle discs by their edges only. Clean the disc with an approved CD cleaner only. Wipe it from the center of the disc toward the edge. Do not clean in a circular motion.

Do not expose discs to direct sunlight or heat sources for extended periods.

MP3 and WMA Track and Folder Structure

Audio systems capable of recognizing and playing MP3 and WMA individual tracks and folder structures work as follows:

- There are two different modes for MP3 and WMA disc playback: MP3 and WMA track mode (system default) and MP3 and WMA folder mode.
- MP3 and WMA track mode ignores any folder structure on the MP3 and WMA disc. The player numbers each MP3 and WMA track on the disc (noted by the MP3 or WMA file extension) from T001 to a maximum of T255. The maximum number of playable MP3 and WMA files may be less depending on the structure of the CD and exact model of radio present.

Fiesta (CCN) Vehicles Built From: 12-01-2015 Vehicles Built Up To: 14-10-2015, CG3582en enGBR, Edition date: 12/2014, First Printing

- MP3 and WMA folder mode represents a folder structure consisting of one level of folders. The CD player numbers all MP3 and WMA tracks on the disc (noted by the MP3 or WMA file extension) and all folders containing MP3 and WMA files, from F001 (folder) T001 (track) to F253 T255.
- Creating discs with only one level of folders helps with navigation through the disc files.

If you are burning your own MP3 and WMA discs, it is important to understand how the system reads the structures you create. While various files may be present, (files with extensions other than MP3 and WMA), only files with the MP3 and WMA extension are played; other files are ignored by the system. This enables you to use the same MP3 and WMA disc for a variety of tasks on your work computer, home computer and your in-vehicle system.

In track mode, the system displays and plays the structure as if it were only one level deep (all MP3 and WMA files play, regardless of being in a specific folder). In folder mode, the system only plays the MP3 and WMA files in the current folder.

AUDIO UNIT - VEHICLES WITH: AM/FM/CD

WARNING

Driving while distracted can result in loss of vehicle control, crash and injury. We strongly recommend that you use extreme caution when using any device that may take your focus off the road. Your primary responsibility is the safe operation of your vehicle. We recommend against the use of any hand-held device while driving and encourage the use of voice-operated systems when possible. Make sure you are aware of all applicable local laws that may affect the use of electronic devices while driving.

Fiesta (CCN) Vehicles Built From: 12-01-2015 Vehicles Built Up To: 14-10-2015, CG3582en enGBR, Edition date: 12/2014, First Printing

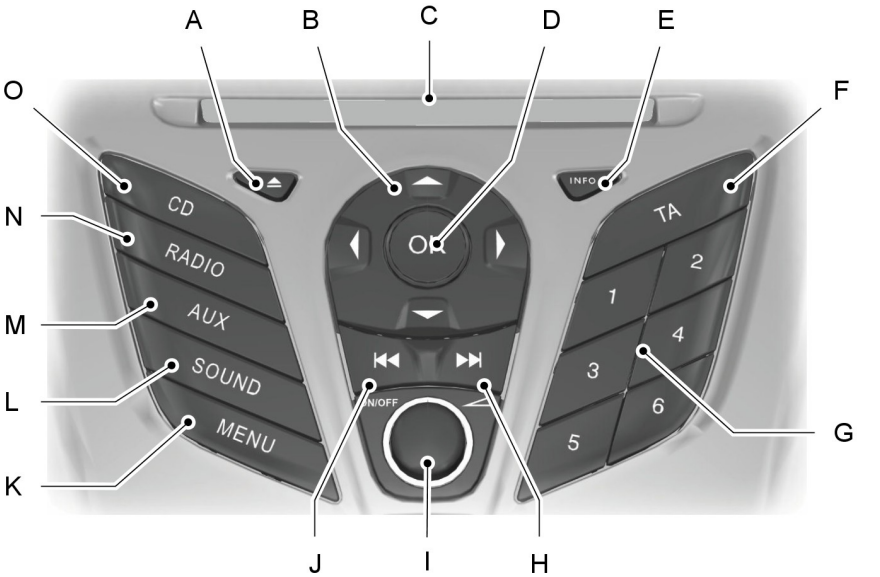

E130324

A **Eject:** Press the button to eject a CD.

B **Cursor arrows:** Press a button to scroll through on-screen choices.

C **CD slot:** Where you insert a CD.

D **OK:** Press the button to confirm on-screen selections.

E **INFO:** Press the button to access radio, CD, USB and IPod information.

F **TA:** Press the button to turn traffic announcements on or off and cancels announcements during an active announcement.

G **Numeric keypad:** Press the button to recall a previously stored station. To store a favorite station press and hold until the sound returns.

H **Seek up:** Press the button to go to the next station up the radio frequency band or the next track on a CD.

I **On, Off and Volume:** Press the button to switch the audio system on or off. Turn the dial to adjust the volume.

J **Seek down:** Press the button to go to the next station down the radio frequency band or the previous track on a CD.

Fiesta (CCN) Vehicles Built From: 12-01-2015 Vehicles Built Up To: 14-10-2015, CG3582en enGBR, Edition date: 12/2014, First Printing

K **MENU:** Press the button to access different audio system features.

L **SOUND:** Press the button to adjust the sound settings for bass, treble, middle, balance and fade.

M **AUX:** Press the button to access the AUX and SYNC features, it will also cancel the menu or list browsing.

N **RADIO:** Press the button to select different radio bands, it will also cancel the menu or list browsing.

O **CD:** Press the button to change source to CD, it will also cancel the menu or list browsing.

Sound Button

This will allow you to adjust the sound settings (for example bass, middle and treble).

1. Press the **SOUND** button.
2. Use the up and down arrow buttons to select the required setting.
3. Use the left and right arrow buttons to make the necessary adjustment. The display indicates the level selected.
4. Press the **OK** button to confirm the new settings.

Waveband Button

Press the **RADIO** button to select from the wavebands available.

You can use the selector to return to radio reception when you have been listening to another source.

Alternatively, press the left arrow button to display the available wavebands. Scroll to the required waveband and press **OK**.

Station Tuning Control

Seek Tuning

Select a waveband and briefly press one of the seek buttons. The unit will stop at the first station it finds in the direction you have chosen.

Manual Tuning

1. Press the **MENU** button.
2. Select **RADIO** mode and then **MANUAL TUNE**.
3. Use the left and right arrow buttons to tune down or up the waveband in small increments or press and hold to increment quickly, until you find a station you want to listen to.
4. Press **OK** to continue listening to a station.

Scan Tuning

Scan allows you to listen to a few seconds of each station detected.

1. Press the **MENU** button.
2. Select **RADIO** mode and then **SCAN**.
3. Use the seek buttons to scan up or down the selected waveband.
4. Press **OK** to continue listening to a station.

Station Preset Buttons

This feature allows you to store your favorite stations, they can be recalled by selecting the appropriate waveband and pressing one of the preset buttons.

1. Select a waveband.
2. Tune to the station required.

Fiesta (CCN) Vehicles Built From: 12-01-2015 Vehicles Built Up To: 14-10-2015, CG3582en enGBR, Edition date: 12/2014, First Printing

3. Press and hold one of the preset buttons. A progress bar and message will appear. When the progress bar completes the station has been stored. The audio unit will also mute momentarily as confirmation.

You can repeat this on each waveband and for each preset button.

Note: *When you drive to another part of the country, stations that broadcast on alternative frequencies and are stored on preset buttons, may be updated with the correct frequency and station name for that area.*

Autostore Control

Note: *This will store up to a maximum of the six strongest signals available, either from the AM or the FM waveband and overwrite the previously stored stations. You can also store stations manually in the same way as other wavebands.*

- Press and hold the **RADIO** button.
- When the search is complete, sound is restored and the strongest signals are stored on the autostore presets.

Traffic Information Control

Many stations that broadcast on the FM waveband have a TP code to signify that they carry traffic program information.

Turning Traffic Announcements On and Off

Before you can receive traffic announcements, you must press either the **TA** or **TRAFFIC** button. A TA display will appear to show the feature is switched on.

If you are already tuned to a station that broadcasts traffic information, **TP** will also be displayed. Otherwise the unit will search for a traffic program.

When traffic information is broadcast, it will automatically interrupt normal radio or CD playback and **Traffic announcement** will appear in the display.

If a non-traffic station is selected or recalled using a preset button, the audio unit will remain on that station unless **TA** or **TRAFFIC** is turned off, then on again.

Note: *If traffic announcement is on and you select a preset or manual tune to a non traffic announcement station no traffic announcement will be heard.*

Note: *When you are listening to a non traffic announcement station and turn traffic announcement off and on again a TP seek will occur.*

Traffic Announcement Volume

Traffic announcements interrupt normal broadcasts at a preset minimum level that is usually louder than normal listening volumes.

To adjust the preset volume:

- Use the volume control to make the necessary adjustment during an incoming traffic announcement broadcast. The display will show the level selected.

Ending Traffic Announcements

The audio unit will return to normal operation at the end of each traffic announcement. To end the announcement prematurely, press **TA** or **TRAFFIC** during the announcement.

Note: *If you press **TA** or **TRAFFIC** at any other time it will switch all announcements off.*

Automatic Volume Control

When available, automatic volume control adjusts the volume level to compensate for engine noise and road speed noise.

Fiesta (CCN) Vehicles Built From: 12-01-2015 Vehicles Built Up To: 14-10-2015, CG3582en enGBR, Edition date: 12/2014, First Printing

1. Press the **MENU** button and select **AUDIO** or **AUDIO SETTINGS**.
2. Select **AVC LEVEL** or **ADAPTIVE VOL**.
3. Use the left or right arrow button to adjust the setting.
4. Press the **OK** button to confirm your selection.
5. Press the **MENU** button to return.

News Broadcasts

Your audio unit may interrupt normal reception to broadcast news bulletins from stations on the FM waveband, radio data system or other enhanced network linked stations.

The display will indicate there is an incoming announcement, during news broadcasts. When the audio unit interrupts for a news broadcast the preset volume level will be the same as traffic announcements.

1. Press the **MENU** button.
2. Select **AUDIO** or **AUDIO SETTINGS**.
3. Scroll to **NEWS** and turn on or off with the **OK** button.
4. Press the **MENU** button to return.

Alternative Frequencies

The majority of programs that broadcast on the FM waveband have a program identification code, it can be recognized by audio units.

When your vehicle moves from one transmission area to another with the alternative frequencies tuning switched on, this function will search for the strongest station signal.

Under certain conditions, alternative frequencies tuning may temporarily disrupt normal reception.

When selected, the unit continually evaluates signal strength and if a better signal becomes available, the unit will switch to that alternative. It mutes while it checks a list of alternative frequencies and if necessary, it will search once across the selected waveband for a genuine alternative frequency.

It will restore radio reception when it finds one or if one is not found, the unit will return to the original stored frequency.

When selected, **AF** will be shown in the display.

1. Press the **MENU** button.
2. Select **AUDIO** or **AUDIO SETTINGS**.
3. Scroll to **ALTERNAT FREQ** or **ALTERNATIVE FREQ** and turn on or off with the **OK** button.
4. Press the **MENU** button to return.

Regional Mode

Regional mode controls the behavior of alternative frequencies switching between regionally related networks of a parent broadcaster. A broadcaster may run a fairly large network across a large part of the country. At various times of the day this large network may be broken down into a number of smaller regional networks, typically centered on major towns or cities. When the network is not split into regional variants, the whole network carries the same programming.

Regional mode ON: This prevents random alternative frequency switches when neighboring regional networks are not carrying the same programming.

Regional mode OFF: This allows a larger coverage area if neighboring regional networks are carrying the same programming, but can cause random alternative frequency switches if they are not.

1. Press the **MENU** button.

Fiesta (CCN) Vehicles Built From: 12-01-2015 Vehicles Built Up To: 14-10-2015, CG3582en enGBR, Edition date: 12/2014, First Printing

2. Select **AUDIO** or **AUDIO SETTINGS**.
3. Scroll to **RDS REGIONAL** and turn on or off with the **OK** button.
4. Press the **MENU** button to return.

AUDIO UNIT - VEHICLES WITH: AM/FM/CD/BLUETOOTH/ SYNC

WARNING

Driving while distracted can result in loss of vehicle control, crash and injury. We strongly recommend that you use extreme caution when using any device that may take your focus off the road. Your primary responsibility is the safe operation of your vehicle. We recommend against the use of any hand-held device while driving and encourage the use of voice-operated systems when possible. Make sure you are aware of all applicable local laws that may affect the use of electronic devices while driving.

Note: *An integrated multi function display is situated above the unit. This shows important information regarding control of your system. Additionally, there are various icons placed around the display screen which light up when a function is active (for example CD, Radio or Aux.)*

Fiesta (CCN) Vehicles Built From: 12-01-2015 Vehicles Built Up To: 14-10-2015, CG3582en enGBR, Edition date: 12/2014, First Printing

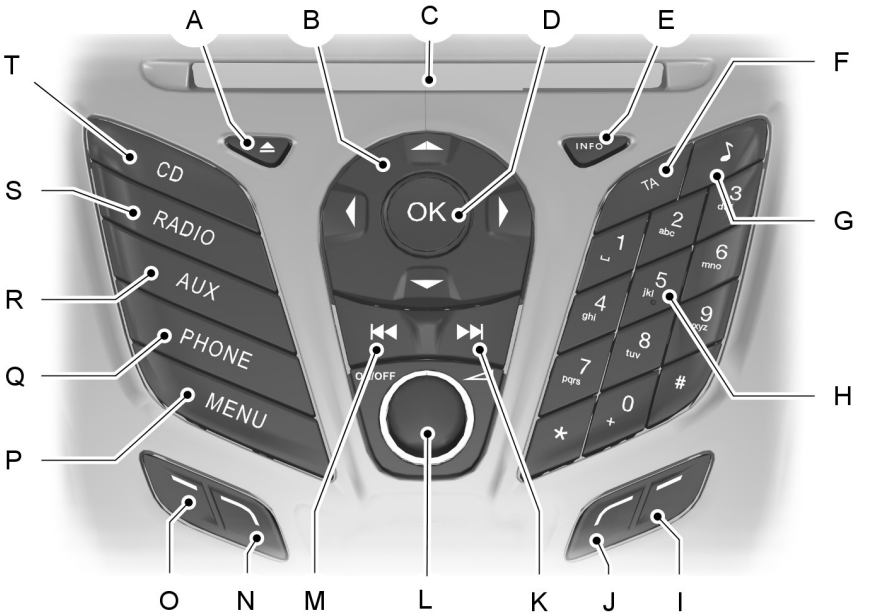

A **Eject:** Press the button to eject a CD.

B **Cursor arrows:** Press a button to scroll through on-screen choices.

C **CD slot:** Where you insert a CD.

D **OK:** Press the button to confirm on-screen selections.

E **INFO:** Press the button to access radio, CD, USB and IPod information.

F **TA:** Press the button to turn traffic announcements on or off and cancels announcements during an active announcement.

G **Sound:** Press the button to adjust the sound settings for bass, treble, middle, balance and fade.

H **Numeric keypad:** Press the button to recall a previously stored station. To store a favorite station press and hold until the sound returns.

I **Function button 4:** Press the button to select different functions of the audio system depending on which mode (i.e. radio or CD) you are in.

Fiesta (CCN) Vehicles Built From: 12-01-2015 Vehicles Built Up To: 14-10-2015, CG3582en enGBR, Edition date: 12/2014, First Printing

J **Function button 3:** Press the button to select different functions of the audio system depending on which mode (i.e. radio or CD) you are in.

K **Seek up:** Press the button to go to the next station up the radio frequency band or the next track on a CD.

L **On, Off and Volume:** Press the button to switch the audio system on or off. Turn the dial to adjust the volume.

M **Seek down:** Press the button to go to the next station down the radio frequency band or the previous track on a CD.

N **Function button 2:** Press the button to select different functions of the audio system depending on which mode (i.e. radio or CD) you are in.

O **Function button 1:** Press the button to select different functions of the audio system depending on which mode (i.e. radio or CD) you are in.

P **MENU:** Press the button to access different audio system features.

Q **PHONE:** Press the button to access the phone feature of the SYNC system by pressing PHONE then MENU. See separate manual.

R **AUX:** Press the button to access the AUX and SYNC features, it will also cancel the menu or list browsing.

S **RADIO:** Press the button to select different radio bands, it will also cancel the menu or list browsing.

T **CD:** Press the button to change source to CD, it will also cancel the menu or list browsing.

Fiesta (CCN) Vehicles Built From: 12-01-2015 Vehicles Built Up To: 14-10-2015, CG3582en enGBR, Edition date: 12/2014, First Printing

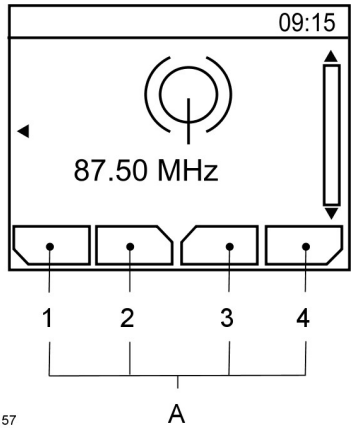

E104157

A Descriptions for function buttons 1-4

Function buttons 1 to 4 are context dependent, and change according to the current unit mode. The description for the current function displays in the screen.

Sound Button

This will allow you to adjust the sound settings (for example bass, middle and treble).

1. Press the sound button.
2. Use the up and down arrow buttons to select the required setting.
3. Use the left and right arrow buttons to make the necessary adjustment. The display indicates the level selected.
4. Press the **OK** button to confirm the new settings.

Waveband Button

Press the **RADIO** button to select from the wavebands available.

You can use the selector to return to radio reception when you have been listening to another source.

Alternatively, press the left arrow button to display the available wavebands. Scroll to the required waveband and press **OK**.

Station Tuning Control

DAB Service Linking

Note: *The system does not automatically turn on every time you switch the ignition on.*

Note: *Service linking allows cross-referencing to other corresponding frequencies of the same station, for example FM and other DAB ensembles.*

Note: *The system will automatically change to another corresponding station if the current one becomes unavailable, for example when leaving the coverage area.*

Switching DAB service linking on and off. See (page 66).

Seek Tuning

Select a waveband and briefly press one of the seek buttons. The unit will stop at the first station it finds in the direction you have chosen.

Manual Tuning

1. Press **function button 2**.
2. Use the left and right arrow buttons to tune down or up the waveband in small increments or press and hold to increment quickly, until you find a station you want to listen to.
3. Press **OK** to continue listening to a station.

Scan Tuning

Scan allows you to listen to a few seconds of each station detected.

Fiesta (CCN) Vehicles Built From: 12-01-2015 Vehicles Built Up To: 14-10-2015, CG3582en enGBR, Edition date: 12/2014, First Printing

1. Press **function button 3**.
2. Use the seek buttons to scan up or down the selected waveband.
3. Press **function button 3** again or **OK** to continue listening to a station.

Station Preset Buttons

This feature allows you to store your favorite stations, they can be recalled by selecting the appropriate waveband and pressing one of the preset buttons.

1. Select a waveband.
2. Tune to the station required.
3. Press and hold one of the preset buttons. A progress bar and message will appear. When the progress bar completes the station has been stored. The audio unit will also mute momentarily as confirmation.

You can repeat this on each waveband and for each preset button.

Note: *When you drive to another part of the country, stations that broadcast on alternative frequencies, and are stored on preset buttons, may be updated with the correct frequency and station name for that area.*

Autostore Control

Note: *This will store up to a maximum of the 10 strongest signals available, either from the AM or the FM waveband, and overwrite the previously stored stations. You can also store stations manually in the same way as other wavebands.*

- Press and hold the **RADIO** button.
- When the search is complete, sound is restored and the strongest signals are stored on the autostore presets.

Traffic Information Control

Many stations that broadcast on the FM waveband have a TP code to signify that they carry traffic program information.

Turning Traffic Announcements On and Off

Before you can receive traffic announcements, you must press either the **TA** or **TRAFFIC** button. A TA display will appear to show the feature is switched on.

If you are already tuned to a station that broadcasts traffic information, **TP** will also be displayed. Otherwise the unit will search for a traffic program.

When traffic information is broadcast, it will automatically interrupt normal radio or CD playback and **Traffic announcement** will appear in the display.

If a non-traffic station is selected or recalled using a preset button, the audio unit will remain on that station unless **TA** or **TRAFFIC** is turned off, then on again.

Note: *If traffic announcement is on and you select a preset or manual tune to a non traffic announcement station no traffic announcement will be heard.*

Note: *When you are listening to a non traffic announcement station and turn traffic announcement off and on again a TP seek will occur.*

Traffic Announcement Volume

Traffic announcements interrupt normal broadcasts at a preset minimum level that is usually louder than normal listening volumes.

To adjust the preset volume:

- Use the volume control to make the necessary adjustment during an incoming traffic announcement broadcast. The display will show the level selected.

Fiesta (CCN) Vehicles Built From: 12-01-2015 Vehicles Built Up To: 14-10-2015, CG3582en enGBR, Edition date: 12/2014, First Printing

Ending Traffic Announcements

The audio unit will return to normal operation at the end of each traffic announcement. To end the announcement prematurely, press **TA** or **TRAFFIC** during the announcement.

Note: *If you press **TA** or **TRAFFIC** at any other time it will switch all announcements off.*

Automatic Volume Control

When available, automatic volume control adjusts the volume level to compensate for engine noise and road speed noise.

1. Press the **MENU** button and select **AUDIO** or **AUDIO SETTINGS**.
2. Select **AVC LEVEL** or **ADAPTIVE VOL**.
3. Use the left or right arrow button to adjust the setting.
4. Press the **OK** button to confirm your selection.
5. Press the **MENU** button to return.

News Broadcasts

Your audio unit may interrupt normal reception to broadcast news bulletins from stations on the FM waveband, radio data system or other enhanced network linked stations.

The display will indicate there is an incoming announcement, during news broadcasts. When the audio unit interrupts for a news broadcast the preset volume level will be the same as traffic announcements.

1. Press the **MENU** button.
2. Select **AUDIO** or **AUDIO SETTINGS**.
3. Scroll to **NEWS** and turn on or off with the **OK** button.
4. Press the **MENU** button to return.

Alternative Frequencies

The majority of programs that broadcast on the FM waveband have a program identification code, it can be recognized by audio units.

When your vehicle moves from one transmission area to another with the alternative frequencies tuning switched on, this function will search for the strongest station signal.

Under certain conditions, alternative frequencies tuning may temporarily disrupt normal reception.

When selected, the unit continually evaluates signal strength and, if a better signal becomes available, the unit will switch to that alternative. It mutes while it checks a list of alternative frequencies and if necessary, it will search once across the selected waveband for a genuine alternative frequency.

It will restore radio reception when it finds one or if one is not found, the unit will return to the original stored frequency.

When selected, AF will be shown in the display.

1. Press the **MENU** button.
2. Select **AUDIO** or **AUDIO SETTINGS**.
3. Scroll to **ALTERNAT FREQ**. or **ALTERNATIVE FREQ**. and turn on or off with the **OK** button.
4. Press the **MENU** button to return.

Regional Mode

Regional mode controls the behavior of alternative frequencies switching between regionally related networks of a parent broadcaster. A broadcaster may run a fairly large network across a large part of the country. At various times of the day this

Fiesta (CCN) Vehicles Built From: 12-01-2015 Vehicles Built Up To: 14-10-2015, CG3582en enGBR, Edition date: 12/2014, First Printing

large network may be broken down into a number of smaller regional networks, typically centered on major towns or cities. When the network is not split into regional variants, the whole network caries the same programming.

Regional mode ON: This prevents random alternative frequency switches when neighboring regional networks are not carrying the same programming.

Regional mode OFF: This allows a larger coverage area if neighboring regional networks are carrying the same programming, but can cause random alternative frequency switches if they are not.

1. Press the **MENU** button.
2. Select **AUDIO** or **AUDIO SETTINGS**.
3. Scroll to **RDS REGIONAL** and turn on or off with the **OK** button.
4. Press the **MENU** button to return.

AUDIO UNIT - VEHICLES WITH: AM/FM/CD/BLUETOOTH/ NAVIGATION SYSTEM

WARNING

Driving while distracted can result in loss of vehicle control, crash and injury. We strongly recommend that you use extreme caution when using any device that may take your focus off the road. Your primary responsibility is the safe operation of your vehicle. We recommend against the use of any hand-held device while driving and encourage the use of voice-operated systems when possible. Make sure you are aware of all applicable local laws that may affect the use of electronic devices while driving.

Note: *An integrated multi function display is situated above the unit. This shows important information regarding control of your system. Additionally, there are various icons placed around the display screen which light up when a function is active (for example CD, Radio or Aux.)*

Fiesta (CCN) Vehicles Built From: 12-01-2015 Vehicles Built Up To: 14-10-2015, CG3582en enGBR, Edition date: 12/2014, First Printing

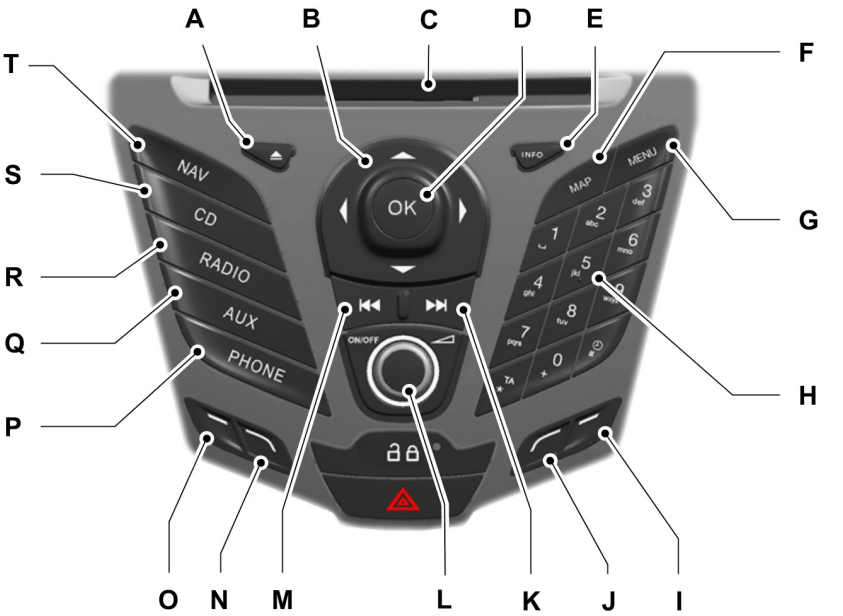

E156630

A **Eject:** Press the button to eject a CD.

B **Cursor arrows:** Press a button to scroll through on-screen choices.

C **CD slot:** Where you insert a CD.

D **OK:** Press the button to confirm on-screen selections.

E **INFO:** Press the button to access radio, CD, USB, IPod and Navigation information. If Navigation has been selected, pressing this button will show details of your current location or journey.

F **MAP** Press the button to enter the map screen. See **Navigation** (page 277).

G **MENU** Press the button to access different audio system features.

H **Numeric keypad:** Press the button to recall a previously stored station. To store a favorite station press and hold until the sound returns.

I **Function button 4:** Press the button to select different functions of the audio system depending on which mode (i.e. radio or CD) you are in.

Fiesta (CCN) Vehicles Built From: 12-01-2015 Vehicles Built Up To: 14-10-2015, CG3582en enGBR, Edition date: 12/2014, First Printing

J **Function button 3:** Press the button to select different functions of the audio system depending on which mode (i.e. radio or CD) you are in.

K **Seek up:** Press the button to go to the next station up the radio frequency band or the next track on a CD.

L **On, Off and Volume:** Press the button to switch the audio system on or off. Turn the dial to adjust the volume.

M **Seek down:** Press the button to go to the next station down the radio frequency band or the previous track on a CD.

N **Function button 2:** Press the button to select different functions of the audio system depending on which mode (i.e. radio or CD) you are in.

O **Function button 1:** Press the button to select different functions of the audio system depending on which mode (i.e. radio or CD) you are in.

P **PHONE:** Press the button to access the phone feature of the SYNC system by pressing PHONE then MENU. See separate manual.

Q **AUX:** Press the button to access the AUX and SYNC features, it will also cancel the menu or list browsing.

R **RADIO:** Press the button to select different radio bands, it will also cancel the menu or list browsing.

S **CD:** Press the button to change source to CD, it will also cancel the menu or list browsing.

T **NAV** Press the button to access the navigation system.

Fiesta (CCN) Vehicles Built From: 12-01-2015 Vehicles Built Up To: 14-10-2015, CG3582en enGBR, Edition date: 12/2014, First Printing

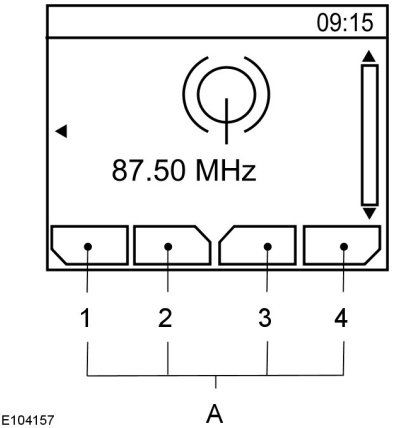

A Descriptions for function buttons 1-4

Function buttons 1 to 4 are context dependent, and change according to the current unit mode. The description for the current function displays in the screen.

Radio Button

Press the **RADIO** button to select from the frequency bands available.

You can use the selector to return to radio reception when you have been listening to another source.

Alternatively, press the left arrow button to display the available frequency bands. Scroll to the required frequency band and press **OK**.

Station Tuning Control

Seek Tuning

Select a frequency band and briefly press the seek up or seek down button. Seek tuning will stop at the first radio station it locates.

Manual Tuning

1. Press function button 2.
2. Use the left and right arrow buttons to tune down or up the frequency band in small increments or press and hold to increment quickly, until you find a station you want to listen to.
3. Press **OK** to continue listening to a station.

Scan Tuning

Scan allows you to listen to a few seconds of each station detected.

1. Press function button 3.
2. Use the seek buttons to scan up or down the selected frequency band.
3. Press function button 3 again or **OK** to continue listening to a station.

Station Preset Buttons

This feature allows you to store your favorite stations, they can be recalled by selecting the appropriate frequency band and pressing one of the preset buttons.

1. Select a frequency band.
2. Tune to the station required.
3. Press and hold one of the preset buttons. A progress bar and message will appear. When the progress bar completes the station has been stored. The audio unit will also mute momentarily as confirmation.

You can repeat this on each frequency band and for each preset button.

Note: *When you drive to another part of the country, stations that broadcast on alternative frequencies, and are stored on preset buttons, may be updated with the correct frequency and station name for that area.*

Fiesta (CCN) Vehicles Built From: 12-01-2015 Vehicles Built Up To: 14-10-2015, CG3582en enGBR, Edition date: 12/2014, First Printing

Autostore Control

Note: *This will store up to a maximum of the 10 strongest signals available, either from the AM or the FM frequency band, and overwrite the previously stored stations. You can also store stations manually in the same way as other frequency bands.*

- Press and hold the **RADIO** button.
- When the search is complete, sound is restored and the strongest signals are stored on the autostore presets.

Traffic Information Control

Many stations that broadcast on the FM waveband have a TP code to signify that they carry traffic program information.

Turning Traffic Announcements On and Off

Before you can receive traffic announcements, you must press either the **TA** or **TRAFFIC** button. A TA display will appear to show the feature is switched on.

If you are already tuned to a station that broadcasts traffic information, TP will also be displayed. Otherwise the unit will search for a traffic program.

When traffic information is broadcast, it will automatically interrupt normal radio or CD playback and a message will appear in the display.

If a non-traffic station is selected or recalled using a preset button, the audio unit will remain on that station unless **TA** or **TRAFFIC** is turned off, then on again.

Note: *If traffic announcement is on and you select a preset or manual tune to a non traffic announcement station no traffic announcements will be heard.*

Note: *When you are listening to a non traffic announcement station and turn traffic announcement off and on again a TP seek will occur.*

Traffic Announcement Volume

Traffic announcements interrupt normal broadcasts at a preset minimum level that is usually louder than normal listening volumes.

To adjust the preset volume use the volume control to make the necessary adjustment during an incoming traffic announcement broadcast. The display will show the level selected.

Ending Traffic Announcements

The audio unit will return to normal operation at the end of each traffic announcement. To end the announcement prematurely, press **TA** or **TRAFFIC** during the announcement.

Note: *If you press **TA** or **TRAFFIC** at any other time it will switch all announcements off.*

Automatic Volume Control

When available, automatic volume control adjusts the volume level to compensate for engine noise and road speed noise.

Press the **MENU** button.

Action	Message
1	Audio settings
2	Adaptive volume

1. Use the left or right arrow button to adjust the setting.
2. Press the **OK** button to confirm your selection.
3. Press the **MENU** button to return.

Fiesta (CCN) Vehicles Built From: 12-01-2015 Vehicles Built Up To: 14-10-2015, CG3582en enGBR, Edition date: 12/2014, First Printing

News Broadcasts

The audio unit may interrupt normal reception to broadcast news bulletins from stations on the FM frequency band, radio data system or other enhanced network linked stations.

The display will indicate there is an incoming announcement, during news broadcasts. When the audio unit interrupts for a news broadcast the preset volume level will be the same as traffic announcements.

Press the **MENU** button.

Action	Message
1	Audio settings
2	News announcement

1. Turn on or off with the **OK** button.
2. Press the **MENU** button to return.

Alternative Frequencies

The majority of programs that broadcast on the FM frequency band have a program identification code, it can be recognized by audio units.

When your vehicle moves from one transmission area to another with the alternative frequencies tuning switched on, this function will search for the strongest station signal.

Under certain conditions, however, alternative frequencies tuning may temporarily disrupt normal reception.

When selected, the unit continually evaluates signal strength and, if a better signal becomes available, the unit will switch to that alternative. It mutes while it checks a list of alternative frequencies and if necessary, it will search once across the selected frequency band for a genuine alternative frequency.

It will restore radio reception when it finds one or if one is not found, the unit will return to the original stored frequency.

When selected, AF may appear in the display.

Press the **MENU** button.

Action	Message
1	Audio settings
2	Alt. frequency

1. Turn on or off with the **OK** button.
2. Press the **MENU** button to return.

Regional Mode

Regional mode controls the behavior of alternative frequencies switching between regionally related networks of a parent broadcaster. A broadcaster may run a fairly large network across a large part of the country. At various times of the day this large network may be broken down into a number of smaller regional networks, typically centered on major towns or cities. When the network is not split into regional variants, the whole network caries the same programming.

Regional mode on: This prevents random alternative frequency switches when neighboring regional networks are not carrying the same programming.

Regional mode off: This allows a larger coverage area if neighboring regional networks are carrying the same programming, but can cause random alternative frequency switches if they are not.

Press the **MENU** button.

Fiesta (CCN) Vehicles Built From: 12-01-2015 Vehicles Built Up To: 14-10-2015, CG3582en enGBR, Edition date: 12/2014, First Printing

Action	Message
1	Audio settings
2	RDS regional

1. Turn on or off with the **OK** button.
2. Press the **MENU** button to return.

AUDIO UNIT - VEHICLES WITH: SONY AM/FM/CD

WARNING

Driving while distracted can result in loss of vehicle control, crash and injury. We strongly recommend that you use extreme caution when using any device that may take your focus off the road. Your primary responsibility is the safe operation of your vehicle. We recommend against the use of any hand-held device while driving and encourage the use of voice-operated systems when possible. Make sure you are aware of all applicable local laws that may affect the use of electronic devices while driving.

Note: *An integrated multi function display is situated above the unit. This shows important information regarding control of your system. Additionally, there are various icons placed around the display screen which light up when a function is active (for example CD, Radio or Aux.)*

Fiesta (CCN) Vehicles Built From: 12-01-2015 Vehicles Built Up To: 14-10-2015, CG3582en enGBR, Edition date: 12/2014, First Printing

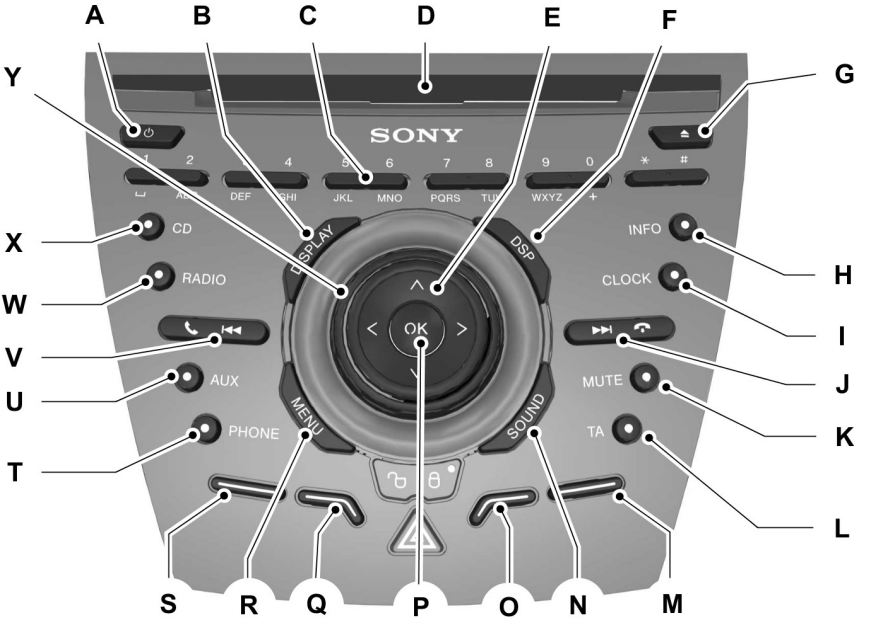

E129074

A **On, Off:** Press the button to switch the audio system on or off.

B **DISPLAY:** Press the button to turn on the display into idle mode.

C **Numeric keypad:** Press the button to recall a previously stored station. To store a favorite station press and hold until the sound returns. In CD mode, press a number to select a track. In phone mode, use the buttons to dial a phone number.

D **CD slot:** Where you insert a CD.

E **Cursor arrows:** Press the button to scroll through on-screen choices.

F **Digital signal processing:** Press the button to access the digital signal processing functions.

G **Eject:** Press the button to eject a CD.

H **INFO:** Press the button to access radio, CD, USB and IPod information.

I **CLOCK:** Press the button to access the clock functions.

Fiesta (CCN) Vehicles Built From: 12-01-2015 Vehicles Built Up To: 14-10-2015, CG3582en enGBR, Edition date: 12/2014, First Printing

J **Seek up:** Press the button to go to the next station up the radio frequency band or the next track on a CD when in CD mode. In phone mode, use the button to end a phone call. An incoming call can be rejected.

K **MUTE:** Press the button to turn the sound off, press again to turn the sound on.

L **TA:** Press the button to turn traffic announcements on or off and cancels announcements during an active announcement.

M **Function button 4:** Press the button to select different functions of the audio system depending on which mode (i.e. radio or CD) you are in.

N **SOUND:** Press the button to adjust the sound settings for bass, treble, middle, balance and fade.

O **Function button 3:** Press the button to select different functions of the audio system depending on which mode (i.e. radio or CD) you are in.

P **OK:** Press the button to confirm on-screen selections.

Q **Function button 2:** Press the button to select different functions of the audio system depending on which mode (i.e. radio or CD) you are in.

R **MENU:** Press the button to access different audio system features.

S **Function button 1:** Press the button to select different functions of the audio system depending on which mode (i.e. radio or CD) you are in.

T **PHONE:** Press the button to access the phone feature of the SYNC system by pressing **PHONE** then **MENU**. See separate manual.

U **AUX:** Press the button to access the AUX and SYNC features, it will also cancel the menu or list browsing.

V **Seek down:** Press the button to go to the next station down the radio frequency band or the previous track on a CD, When in CD mode. In phone mode use the button to begin a phone call. An incoming phone call can be accepted.

W **RADIO:** Press the button to select different radio bands, it will also cancel the menu or list browsing.

X **CD:** Press the button to change source to CD, it will also cancel the menu or list browsing.

Y **Volume:** Turn the dial to adjust the volume.

Fiesta (CCN) Vehicles Built From: 12-01-2015 Vehicles Built Up To: 14-10-2015, CG3582en enGBR, Edition date: 12/2014, First Printing

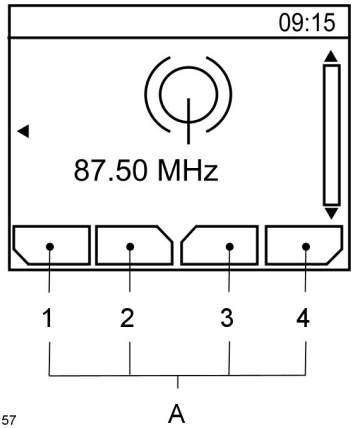

E104157

A Descriptions for function buttons 1-4

Function buttons 1 to 4 are context dependent, and change according to the current unit mode. The description for the current function displays in the screen.

Sound Button

This will allow you to adjust the sound settings (for example bass, middle and treble).

1. Press the **SOUND** button.
2. Use the up and down arrow buttons to select the required setting.
3. Use the left and right arrow buttons to make the necessary adjustment. The display indicates the level selected.
4. Press the **OK** button to confirm the new settings.

Waveband Button

Press the **RADIO** button to select from the wavebands available.

You can use the selector to return to radio reception when you have been listening to another source.

Alternatively, press the left arrow button to display the available wavebands. Scroll to the required waveband and press **OK**.

Station Tuning Control

DAB Service Linking

Note: *The system does not automatically turn on every time you switch the ignition on.*

Note: *Service linking allows cross-referencing to other corresponding frequencies of the same station, for example FM and other DAB ensembles.*

Note: *The system will automatically change to another corresponding station if the current one becomes unavailable, for example when leaving the coverage area.*

Switching DAB service linking on and off. See (page 66).

Seek Tuning

Select a waveband and briefly press one of the seek buttons. The unit will stop at the first station it finds in the direction you have chosen.

Manual Tuning

1. Press function button 2.
2. Use the left and right arrow buttons to tune down or up the waveband in small increments or press and hold to increment quickly, until you find a station you want to listen to.
3. Press **OK** to continue listening to a station.

Scan Tuning

Scan allows you to listen to a few seconds of each station detected.

Fiesta (CCN) Vehicles Built From: 12-01-2015 Vehicles Built Up To: 14-10-2015, CG3582en enGBR, Edition date: 12/2014, First Printing

1. Press function button 3.
2. Use the seek buttons to scan up or down the selected waveband.
3. Press function button 3 again or **OK** to continue listening to a station.

Station Preset Buttons

This feature allows you to store your favorite stations, they can be recalled by selecting the appropriate waveband and pressing one of the preset buttons.

1. Select a waveband.
2. Tune to the station required.
3. Press and hold one of the preset buttons. A progress bar and message will appear. When the progress bar completes the station has been stored. The audio unit will also mute momentarily as confirmation.

You can repeat this on each waveband and for each preset button.

Note: *When you drive to another part of the country, stations that broadcast on alternative frequencies, and are stored on preset buttons, may be updated with the correct frequency and station name for that area.*

Autostore Control

Note: *This will store up to a maximum of the 10 strongest signals available, either from the AM or the FM waveband, and overwrite the previously stored stations. You can also store stations manually in the same way as other wavebands.*

Note: *You must select either **FM AST** or **AM AST** to use this function.*

- Press and hold the **RADIO** button.
- When the search is complete, sound is restored and the strongest signals are stored on the autostore presets.

Traffic Information Control

Many stations that broadcast on the FM waveband have a TP code to signify that they carry traffic program information.

Turning Traffic Announcements On and Off

Before you can receive traffic announcements, you must press either the **TA** or **TRAFFIC button**. A TA display will appear to show the feature is switched on.

If you are already tuned to a station that broadcasts traffic information, **TP** will also be displayed. Otherwise the unit will search for a traffic program.

When traffic information is broadcast, it will automatically interrupt normal radio or CD playback and Traffic announcement will appear in the display.

If a non-traffic station is selected or recalled using a preset button, the audio unit will remain on that station unless **TA** or **TRAFFIC** is turned off, then on again.

Note: *If traffic announcement is on and you select a preset or manual tune to a non traffic announcement station no traffic announcement will be heard.*

Note: *When you are listening to a non traffic announcement station and turn traffic announcement off and on again a TP seek will occur.*

Traffic Announcement Volume

Traffic announcements interrupt normal broadcasts at a preset minimum level that is usually louder than normal listening volumes.

To adjust the preset volume:

- Use the volume control to make the necessary adjustment during an incoming traffic announcement broadcast. The display will show the level selected.

Fiesta (CCN) Vehicles Built From: 12-01-2015 Vehicles Built Up To: 14-10-2015, CG3582en enGBR, Edition date: 12/2014, First Printing

Ending Traffic Announcements

The audio unit will return to normal operation at the end of each traffic announcement. To end the announcement prematurely, press **TA** or **TRAFFIC** during the announcement.

Note: *If you press **TA** or **TRAFFIC** at any other time it will switch all announcements off.*

Automatic Volume Control

When available, automatic volume control adjusts the volume level to compensate for engine noise and road speed noise.

1. Press the **MENU** button.
2. Select **AUDIO** or **AUDIO SETTINGS**.
3. Select **AVC LEVEL** or **ADAPTIVE VOL**.
4. Use the left or right arrow button to adjust the setting.
5. Press the **OK** button to confirm your selection.
6. Press the **MENU** button to return.

Digital Signal Processing

Digital Signal Processing Occupancy

This feature takes into account the differences in distance from the various speakers in your vehicle to each seat. You must select the correct sitting position for the audio to be correctly set.

Digital Signal Processing Equalizer

Select the music category that most suits your listening preference. The audio output will change to enhance the particular style of music chosen.

Changing the Digital Signal Processing Settings

1. Press the **MENU** button.
2. Select **AUDIO** or **AUDIO SETTINGS**.
3. Scroll to the required digital signal processing function.
4. Press the **OK** button.
5. Use the up and down arrow buttons to select the required setting.
6. Press the **OK** button to confirm your selection.
7. Press the **MENU** button to return.

News Broadcasts

Your audio unit may interrupt normal reception to broadcast news bulletins from stations on the FM waveband, radio data system or other enhanced network linked stations.

The display will indicate there is an incoming announcement, during news broadcasts. When the audio unit interrupts for a news broadcast the preset volume level will be the same as traffic announcements.

1. Press the **MENU** button.
2. Select **AUDIO** or **AUDIO SETTINGS**.
3. Scroll to **NEWS** and turn on or off with the **OK** button.
4. Press the **MENU** button to return.

Alternative Frequencies

The majority of programs that broadcast on the FM waveband have a program identification code, it can be recognized by audio units.

When your vehicle moves from one transmission area to another with the alternative frequencies tuning switched on, this function will search for the strongest station signal.

Under certain conditions, however, alternative frequencies tuning may temporarily disrupt normal reception.

Fiesta (CCN) Vehicles Built From: 12-01-2015 Vehicles Built Up To: 14-10-2015, CG3582en enGBR, Edition date: 12/2014, First Printing

When selected, the unit continually evaluates signal strength and, if a better signal becomes available, the unit will switch to that alternative. It mutes while it checks a list of alternative frequencies and if necessary, it will search once across the selected waveband for a genuine alternative frequency.

It will restore radio reception when it finds one or if one is not found, the unit will return to the original stored frequency.

When selected, AF will be shown in the display.

1. Press the **MENU** button.
2. Select **AUDIO** or **AUDIO SETTINGS**.
3. Scroll to **ALTERNAT FREQ**. or **ALTERNATIVE FREQ**. and turn on or off with the **OK** button.
4. Press the **MENU** button to return.

Regional Mode

Regional mode controls the behavior of alternative frequencies switching between regionally related networks of a parent broadcaster. A broadcaster may run a fairly large network across a large part of the country. At various times of the day this large network may be broken down into a number of smaller regional networks, typically centered on major towns or cities. When the network is not split into regional variants, the whole network carries the same programming.

Regional mode ON: This prevents random alternative frequency switches when neighboring regional networks are not carrying the same programming.

Regional mode OFF: This allows a larger coverage area if neighboring regional networks are carrying the same programming, but can cause 'random' alternative frequency switches if they are not.

1. Press the **MENU** button.
2. Select **AUDIO** or **AUDIO SETTINGS**.
3. Scroll to **RDS REGIONAL** and turn on or off with the **OK** button.
4. Press the **MENU** button to return.

AUDIO UNIT - VEHICLES WITH: NAVIGATION SYSTEM/SONY AM/FM/CD

WARNING

Driving while distracted can result in loss of vehicle control, crash and injury. We strongly recommend that you use extreme caution when using any device that may take your focus off the road. Your primary responsibility is the safe operation of your vehicle. We recommend against the use of any handheld device while driving and encourage the use of voice-operated systems when possible. Make sure you are aware of all applicable local laws that may affect the use of electronic devices while driving.

Note: *An integrated multi function display is situated above the unit. This shows important information regarding control of your system. Additionally, there are various icons placed around the display screen which light up when a function is active (for example CD, Radio or Aux.)*

Fiesta (CCN) Vehicles Built From: 12-01-2015 Vehicles Built Up To: 14-10-2015, CG3582en enGBR, Edition date: 12/2014, First Printing

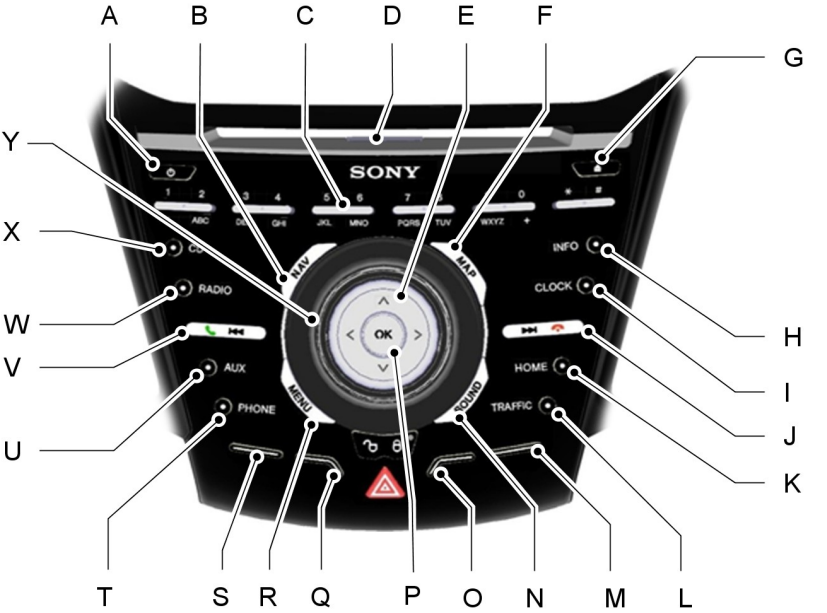

E156660

A **On, Off:** Press the button to switch the audio system on or off.

B **NAV:** Press the button to access the navigation system.

C **Numeric keypad:** Press the button to recall a previously stored station. To store a favorite station press and hold until the sound returns. In CD mode, press a number to select a track. In phone mode, use the buttons to dial a phone number.

D **CD slot:** Where you insert a CD.

E **Cursor arrows:** Press the button to scroll through on-screen choices.

F **MAP:** Press the button to access map features.

G **Eject:** Press the button to eject a CD.

H **INFO:** Press the button to access radio, CD, USB, IPod and Navigation information. If Navigation has been selected, pressing this button will show details of your current location or journey.

I **CLOCK:** Press the button to access the clock functions.

Fiesta (CCN) Vehicles Built From: 12-01-2015 Vehicles Built Up To: 14-10-2015, CG3582en enGBR, Edition date: 12/2014, First Printing

J **Seek up:** Press the button to go to the next station up the radio frequency band or the next track on a CD when in CD mode. In phone mode, use the button to end a phone call. An incoming call can be rejected.

K **HOME:** Press the button to access the address menu, to start navigating to your home address or to change your home address.

L **TRAFFIC:** Press the button to turn traffic announcements on or off and cancel an active announcement. If Navigation has been selected, pressing this button takes you to the traffic menu.

M **Function button 4:** Press the button to select different functions of the audio system depending on which mode (i.e. radio or CD) you are in.

N **SOUND:** Press the button to adjust the sound settings for bass, treble, middle, balance and fade.

O **Function button 3:** Press the button to select different functions of the audio system depending on which mode (i.e. radio or CD) you are in.

P **OK:** Press the button to confirm on-screen selections.

Q **Function button 2:** Press the button to select different functions of the audio system depending on which mode (i.e. radio or CD) you are in.

R **MENU:** Press the button to access different audio system features.

S **Function button 1:** Press the button to select different functions of the audio system depending on which mode (i.e. radio or CD) you are in.

T **PHONE:** Press the button to access the phone feature of the SYNC system by pressing **PHONE** then **MENU**. See separate manual.

U **AUX:** Press the button to access the AUX and SYNC features, it will also cancel the menu or list browsing.

V **Seek down:** Press the button to go to the next station down the radio frequency band or the previous track on a CD, when in CD mode. In phone mode use the button to begin a phone call. An incoming phone call can be accepted.

W **RADIO:** Press the button to select different radio bands, it will also cancel the menu or list browsing.

X **CD:** Press the button to change source to CD, it will also cancel the menu or list browsing.

Y **Volume:** Turn the dial to adjust the volume.

Fiesta (CCN) Vehicles Built From: 12-01-2015 Vehicles Built Up To: 14-10-2015, CG3582en enGBR, Edition date: 12/2014, First Printing

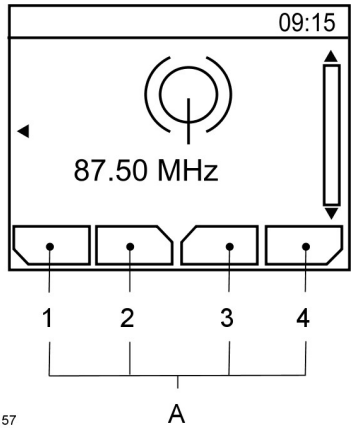

E104157

A Descriptions for function buttons 1-4

Function buttons 1 to 4 are context dependent, and change according to the current unit mode. The description for the current function displays in the screen.

Sound Button

This will allow you to adjust the sound settings (for example bass, middle and treble).

1. Press the **SOUND** button.
2. Use the up and down arrow buttons to select the required setting.
3. Use the left and right arrow buttons to make the necessary adjustment. The display indicates the level selected.
4. Press the **OK** button to confirm the new settings.

Waveband Button

Press the **RADIO** button to select from the wavebands available.

You can use the selector to return to radio reception when you have been listening to another source.

Alternatively, press the left arrow button to display the available wavebands. Scroll to the required waveband and press **OK**.

Station Tuning Control

DAB Service Linking

Note: *The system does not automatically turn on every time you switch the ignition on.*

Note: *Service linking allows cross-referencing to other corresponding frequencies of the same station, for example FM and other DAB ensembles.*

Note: *The system will automatically change to another corresponding station if the current one becomes unavailable, for example when leaving the coverage area.*

Switching DAB service linking on and off. See (page 66).

Seek Tuning

Select a waveband and briefly press one of the seek buttons. The unit will stop at the first station it finds in the direction you have chosen.

Manual Tuning

1. Press function button 2.
2. Use the left and right arrow buttons to tune down or up the waveband in small increments or press and hold to increment quickly, until you find a station you want to listen to.
3. Press **OK** to continue listening to a station.

Scan Tuning

Scan allows you to listen to a few seconds of each station detected.

Fiesta (CCN) Vehicles Built From: 12-01-2015 Vehicles Built Up To: 14-10-2015, CG3582en enGBR, Edition date: 12/2014, First Printing

1. Press function button 3.
2. Use the seek buttons to scan up or down the selected waveband.
3. Press function button 3 again or **OK** to continue listening to a station.

Station Preset Buttons

This feature allows you to store your favorite stations, they can be recalled by selecting the appropriate waveband and pressing one of the preset buttons.

1. Select a waveband.
2. Tune to the station required.
3. Press and hold one of the preset buttons. A progress bar and message will appear. When the progress bar completes the station has been stored. The audio unit will also mute momentarily as confirmation.

You can repeat this on each waveband and for each preset button.

Note: *When you drive to another part of the country, stations that broadcast on alternative frequencies, and are stored on preset buttons, may be updated with the correct frequency and station name for that area.*

Autostore Control

Note: *This will store up to a maximum of the 10 strongest signals available, either from the AM or the FM waveband, and overwrite the previously stored stations. You can also store stations manually in the same way as other wavebands.*

Note: *You must select either **FM AST** or **AM AST** to use this function.*

- Press and hold the **RADIO** button.
- When the search is complete, sound is restored and the strongest signals are stored on the autostore presets.

Traffic Information Control

Many stations that broadcast on the FM waveband have a TP code to signify that they carry traffic program information.

Turning Traffic Announcements On and Off

Before you can receive traffic announcements, you must press either the **TA** or **TRAFFIC** button. A TA display will appear to show the feature is switched on.

If you are already tuned to a station that broadcasts traffic information, **TP** will also be displayed. Otherwise the unit will search for a traffic program.

When traffic information is broadcast, it will automatically interrupt normal radio or CD playback and Traffic announcement will appear in the display.

If a non-traffic station is selected or recalled using a preset button, the audio unit will remain on that station unless **TA** or **TRAFFIC** is turned off, then on again.

Note: *If traffic announcement is on and you select a preset or manual tune to a non traffic announcement station no traffic announcement will be heard.*

Note: *When you are listening to a non traffic announcement station and turn traffic announcement off and on again a TP seek will occur.*

Traffic Announcement Volume

Traffic announcements interrupt normal broadcasts at a preset minimum level that is usually louder than normal listening volumes.

To adjust the preset volume:

- Use the volume control to make the necessary adjustment during an incoming traffic announcement broadcast. The display will show the level selected.

Fiesta (CCN) Vehicles Built From: 12-01-2015 Vehicles Built Up To: 14-10-2015, CG3582en enGBR, Edition date: 12/2014, First Printing

Ending Traffic Announcements

The audio unit will return to normal operation at the end of each traffic announcement. To end the announcement prematurely, press **TA** or **TRAFFIC** during the announcement.

Note: *If you press **TA** or **TRAFFIC** at any other time it will switch all announcements off.*

Automatic Volume Control

When available, automatic volume control adjusts the volume level to compensate for engine noise and road speed noise.

1. Press the **MENU** button.
2. Select **AUDIO** or **AUDIO SETTINGS**.
3. Select **AVC LEVEL** or **ADAPTIVE VOL**.
4. Use the left or right arrow button to adjust the setting.
5. Press the **OK** button to confirm your selection.
6. Press the **MENU** button to return.

Digital Signal Processing

Digital Signal Processing Occupancy

This feature takes into account the differences in distance from the various speakers in your vehicle to each seat. You must select the correct sitting position for the audio to be correctly set.

Digital Signal Processing Equalizer

Select the music category that most suits your listening preference. The audio output will change to enhance the particular style of music chosen.

Changing the Digital Signal Processing Settings

1. Press the **MENU** button.
2. Select **AUDIO** or **AUDIO SETTINGS**.
3. Scroll to the required digital signal processing function.
4. Press the **OK** button.
5. Use the up and down arrow buttons to select the required setting.
6. Press the **OK** button to confirm your selection.
7. Press the **MENU** button to return.

News Broadcasts

Your audio unit may interrupt normal reception to broadcast news bulletins from stations on the FM waveband, radio data system or other enhanced network linked stations.

The display will indicate there is an incoming announcement, during news broadcasts. When the audio unit interrupts for a news broadcast the preset volume level will be the same as traffic announcements.

1. Press the **MENU** button.
2. Select **AUDIO** or **AUDIO SETTINGS**.
3. Scroll to **NEWS** and turn on or off with the **OK** button.
4. Press the **MENU** button to return.

Alternative Frequencies

The majority of programs that broadcast on the FM waveband have a program identification code, it can be recognized by audio units.

When your vehicle moves from one transmission area to another with the alternative frequencies tuning switched on, this function will search for the strongest station signal.

Under certain conditions, however, alternative frequencies tuning may temporarily disrupt normal reception.

Fiesta (CCN) Vehicles Built From: 12-01-2015 Vehicles Built Up To: 14-10-2015, CG3582en enGBR, Edition date: 12/2014, First Printing

When selected, the unit continually evaluates signal strength and, if a better signal becomes available, the unit will switch to that alternative. It mutes while it checks a list of alternative frequencies and if necessary, it will search once across the selected waveband for a genuine alternative frequency.

It will restore radio reception when it finds one or if one is not found, the unit will return to the original stored frequency.

When selected, **AF** will be shown in the display.

1. Press the **MENU** button.
2. Select **AUDIO** or **AUDIO SETTINGS**.
3. Scroll to **ALTERNAT FREQ**. or **ALTERNATIVE FREQ**. and turn on or off with the **OK** button.
4. Press the **MENU** button to return.

Regional Mode

Regional mode controls the behavior of alternative frequencies switching between regionally related networks of a parent broadcaster. A broadcaster may run a fairly large network across a large part of the country. At various times of the day this large network may be broken down into a number of smaller regional networks, typically centered on major towns or cities. When the network is not split into regional variants, the whole network carries the same programming.

Regional mode ON: This prevents random alternative frequency switches when neighboring regional networks are not carrying the same programming.

Regional mode OFF: This allows a larger coverage area if neighboring regional networks are carrying the same programming, but can cause random alternative frequency switches if they are not.

1. Press the **MENU** button.
2. Select **AUDIO** or **AUDIO SETTINGS**.
3. Scroll to **RDS REGIONAL** and turn on or off with the **OK** button.
4. Press the **MENU** button to return.

DIGITAL RADIO

The system allows you to listen to DAB (Digital Audio Broadcast) radio stations.

Note: *Coverage differs from region to region and will influence the quality of reception. It is broadcast nationwide, regionally and locally.*

The following formats are supported:

- DAB
- DAB+
- DMB-Audio (Digital Multimedia Broadcasting).

Ensembles

Ensembles contain a group of radio stations. Each ensemble can consist of several different radio stations.

The radio station name displays below the ensemble name.

Note: *When you tune from one ensemble to another, it can take a while until the system synchronizes to the next ensemble. The system mutes during synchronization.*

Selecting Radio Band

DAB1 and DAB2 operate in the same way. You can store up to 10 different presets on each band.

1. Press the **RADIO** button.
2. Press the left arrow button to display the available wavebands.
3. Select **DAB1** or **DAB2**.

Fiesta (CCN) Vehicles Built From: 12-01-2015 Vehicles Built Up To: 14-10-2015, CG3582en enGBR, Edition date: 12/2014, First Printing

Radio Station Tuning Control

Press the **RADIO** button and select **DAB1** or **DAB2**. Both preset banks operate in the same way and can store up to 10 different preset radio stations.

Note: *When you reach the first or last radio station within an ensemble, further tuning will skip to the next ensemble. There may be a delay during this change and the audio will briefly mute.*

Seek Tuning

1. Press a seek button. The system will stop at the first radio station it finds in the direction chosen.

Radio Station List

This feature displays all the available radio stations in a list.

1. Press function button 1.
2. Press the left or right arrow buttons to change ensembles. Press the up or down arrow button to navigate to your required radio station.
3. Press **OK** to confirm your selection.

Note: *The display will only show radio stations in the current ensemble.*

Manual Tuning

1. Press function button 2.
2. Press the left or right arrow button to tune up or down the waveband in small increments. Press and hold to move through the waveband quickly.
3. Press **OK** to confirm your selection.

Note: *Seek tuning is also possible within this screen.*

Radio Station Preset Buttons

This feature allows you to store up to 10 favorite radio stations from any ensemble in each preset bank.

1. Select a radio station.
2. Press and hold one of the preset buttons. A progress bar and message will appear. When the progress bar completes the radio station has been stored. The system will mute momentarily as confirmation.

Once stored press a preset button at any time to select a favourite radio station.

Note: *Radio stations stored on the preset buttons may not always be available if you have left the coverage area. The system will mute when this happens.*

Radio Text

You can display extra information. For example; artist name. To switch this option on, select a radio station and press function button 3.

Note: *Extra information may not always be available.*

Service Linking

If you leave the coverage area of a DAB radio station the system will automatically switch to the corresponding FM radio station.

You can switch this feature on and off using the information display. See (page 66).

Note: *If a DAB radio station has no corresponding FM radio station, the audio will mute when attempting to switch.*

Note: *The system will display the FM symbol when DAB and FM radio stations link.*

Fiesta (CCN) Vehicles Built From: 12-01-2015 Vehicles Built Up To: 14-10-2015, CG3582en enGBR, Edition date: 12/2014, First Printing

AUDIO INPUT JACK

WARNINGS

Driving while distracted can result in loss of vehicle control, accident and injury. We strongly recommend that you use extreme caution when using any device or feature that may take your focus off the road. Your primary responsibility is the safe operation of your vehicle. We recommend against the use of any handheld device while driving and encourage the use of voice-operated systems when possible. Make sure you are aware of all applicable local laws that may affect the use of electronic devices while driving.

For safety reasons, do not connect or adjust the settings on your portable music player while your vehicle is moving.

Store the portable music player in a secure location, such as the center console or the glove box, when your vehicle is in moving. Hard objects may become projectiles in a collision or sudden stop, which may increase the risk of serious injury. The audio extension cable must be long enough to allow the portable music player to be safely stored while your vehicle is moving.

The auxiliary input jack allows you to connect and play music from your portable music player through your vehicle speakers. You can use any portable music player designed for use with headphones. Your audio extension cable must have male one-eighth inch (three and one-half millimeter) connectors at each end.

1. Make sure your vehicle is stationary with the radio and portable music players turned off.
2. Plug the extension cable from the portable music player into the auxiliary input jack.
3. Switch the radio on. Select either a tuned FM station or a CD.
4. Adjust the volume as desired.
5. Switch the portable music player on and adjust its volume to half its maximum level.
6. Press **AUX** until **LINE** or **LINE IN** appears in the display. You should hear music from your device even if it is low.
7. Adjust the volume on your portable music player until it reaches the volume level of the FM station or CD. Do this by switching back and forth between the AUX and FM or CD controls.

USB PORT

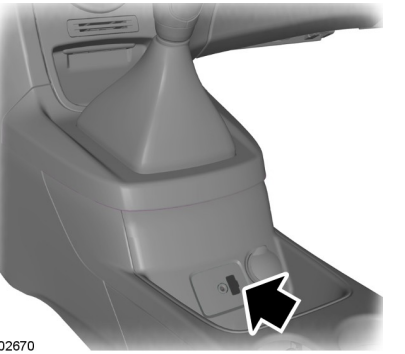

E102670

See **Using SYNC™ With Your Media Player** (page 259).

Fiesta (CCN) Vehicles Built From: 12-01-2015 Vehicles Built Up To: 14-10-2015, CG3582en enGBR, Edition date: 12/2014, First Printing

AUDIO TROUBLESHOOTING

Audio unit display	Rectification
Please check CD	General error message for CD fault conditions, for example cannot read the CD, data-CD inserted, etc. Make sure the disc is loaded correctly. Clean and re-try, or replace disc with known music disc. If error persists contact an authorized dealer.
CD drive malfunction	General error message for CD fault conditions. For example a mechanism fault.
CD drive high temp.	Ambient temperature too hot – unit will not work until it has cooled down.

Fiesta (CCN) Vehicles Built From: 12-01-2015 Vehicles Built Up To: 14-10-2015, CG3582en enGBR, Edition date: 12/2014, First Printing

GENERAL INFORMATION

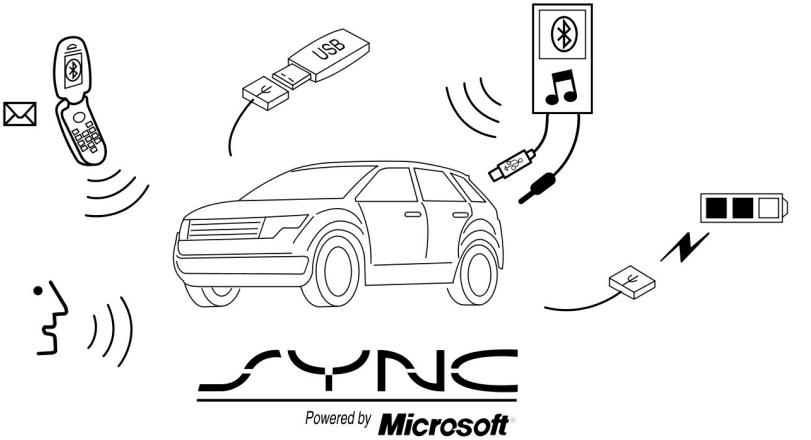

E142598

SYNC is an in-vehicle communications system that works with your Bluetooth-enabled cell phone and portable media player.

This allows you to:

- Make and receive calls
- Access and play music from your media player
- Use Emergency Assistance and applications, via SYNC Applink *
- Access phonebook contacts and music using voice commands
- Stream music from your connected cell phone
- Select pre-defined text messages (if your device supports this)
- Use the advanced voice recognition system
- Charge your USB device (if your device supports this)

*These features are not available in all markets and may require activation. Available AppLink enabled apps vary by market.

Make sure that you review your device's manual before using it with SYNC.

Support

For further support, see an authorized dealer. For more information, visit the regional Ford website.

Safety Information

WARNING

Driving while distracted can result in loss of vehicle control, crash and injury. We strongly recommend that you use extreme caution when using any device that may take your focus off the road. Your primary responsibility is the safe operation of your vehicle. We recommend against the use of any hand-held device while driving and encourage the use of voice-operated systems when possible. Make sure you are aware of all applicable local laws that may affect the use of electronic devices while driving.

When using SYNC:

- Do not operate playing devices if the power cords or cables are broken, split or damaged. Carefully place cords and cables where you cannot step on them or they do not interfere with the operation of pedals, seats, compartments or safe driving abilities.
- Do not leave playing devices in your vehicle during extreme conditions as it could cause them damage. Refer to your device's manual for further information.
- Do not attempt to service or repair the system. See an authorized dealer.

Privacy Information

When a cell phone is connected to SYNC, the system creates a profile that is linked to that cell phone. The system creates the profile to offer you more mobile features and to operate more efficiently. Among other things, this profile may contain data about your phonebook, text messages (read and unread) and call history. This will include the history of calls when your cell phone was not connected to the system. If you connect a media player, the system creates and retains an index of supported media content. The system also records a short development log of approximately 10 minutes of all recent system activity. The log profile and other system data may be used to improve the system and help diagnose any problems that may occur.

The cell phone profile, media player index and development log will remain in the system unless deleted. They are generally accessible in your vehicle only when you connect your cell phone or media player. If you no longer plan to use the system or your vehicle, we recommend you complete a master reset to erase all stored information. See **Information Displays** (page 66).

Special equipment is required to access system data. Access to your vehicle's SYNC module is also required. We will not access the system data for any purpose other than as described without consent. Examples where system data can be accessed are for a court order, where required by law enforcement, other government authorities or other third parties acting with lawful authority. Other parties may seek to access the information independently of us. Further privacy information is available. See **SYNC™ Applications and Services** (page 252).

USING VOICE RECOGNITION

This system helps you control many features using voice commands. This allows you to keep your hands on the steering wheel and focus on what is around you.

Helpful Hints

Make sure the interior of your vehicle is as quiet as possible. Wind noise from open windows and road vibrations may prevent the system from correctly recognizing spoken commands.

Fiesta (CCN) Vehicles Built From: 12-01-2015 Vehicles Built Up To: 14-10-2015, CG3582en enGBR, Edition date: 12/2014, First Printing

Before giving a voice command, wait for the system announcement to finish followed by a single beep. Any command spoken before this does not register with the system.

Speak naturally, without long pauses between words.

You can interrupt the system at any time while it is speaking by pressing the voice button. You can also cancel a voice session at any time by pressing and holding the voice button.

Initiating a Voice Session

Press the voice button. A list of available commands appears in the display.

Command	Description
Bluetooth audio	Stream audio from your cell phone.
(cancel | stop | exit)	Cancel the requested action.
((line | AV | audio video) in | AUX | audio video)	Access the device connected to the auxiliary input jack.
(phone | Blackberry | iPhone | Mobile)	Make calls.
(USB [stick] | iPod | MP3 [player])	Access the device connected to your USB port.
voice settings	Adjust the level of voice interaction and feedback.
[main menu] help	Hear a list of voice commands available in the current mode.

System Interaction and Feedback

The system provides feedback through audible tones, prompts, questions and spoken confirmations depending on the situation and your chosen level of interaction. You can customize the voice recognition system to provide more or less instruction and feedback.

The default setting is to a higher level of interaction in order to help you learn to use the system. You can change these settings at any time.

Adjusting the Interaction Level

Press the voice button. When prompted:

Command	Description
voice settings	Provides access to change the interaction level.

Then any of the following:

Fiesta (CCN) Vehicles Built From: 12-01-2015 Vehicles Built Up To: 14-10-2015, CG3582en enGBR, Edition date: 12/2014, First Printing

Command	Description
interaction mode advanced	Provides less audible interaction and more tone prompts.
interaction mode novice	Provides more detailed interaction and guidance.

Confirmation prompts are short questions the system asks when it is not sure of your request or when there is more than one possible response to your request. For example, the system may ask if the command phone is correct.

Press the voice button. When prompted:

Command	Description
voice settings	Provides access to change the confirmation prompt setting.

Then any of the following:

Command	Description
confirmation prompts off	Makes a best guess from the command. You may still occasionally be asked to confirm settings.
confirmation prompts on	Clarifies your voice command with a short question.

The system creates suggestion lists when it has the same confidence level of several options based on your voice commands. When switched on, the system may prompt you with as many as four possibilities for clarification.

Command	Description
media candidate lists off	Makes a best guess from the media suggestion list. The system may occasionally ask you questions.
media candidate lists on	Clarifies your voice command for media suggestions.
phone candidate lists off	Makes a best guess from the cell phone suggestion list. The system may occasionally ask you questions.
phone candidate lists on	Clarifies your voice command for cell phone suggestions.

Fiesta (CCN) Vehicles Built From: 12-01-2015 Vehicles Built Up To: 14-10-2015, CG3582en enGBR, Edition date: 12/2014, First Printing

Changing the Voice Settings

You can change the voice settings using the information and entertainment display.

Press the **MENU** button.

Action	Message
1	SYNC-Settings
2	Voice settings

USING SYNC™ WITH YOUR PHONE

Hands-free calling is one of the main features of SYNC. While the system supports a variety of features, many are dependent on your cell phone's functionality.

At a minimum, most cell phones with Bluetooth wireless technology support the following functions:

- Answering an incoming call.
- Ending a call.
- Using privacy mode.
- Dialing a number.
- Redialing.
- Call waiting notification.
- Caller ID.

Other features such as text messaging using Bluetooth and automatic phonebook download are cell phone dependent features. To check your cell phone's compatibility, refer to your device's manual or visit the regional Ford website.

Pairing a Cell Phone For the First Time

Wirelessly pairing your cell phone with the system allows you to make and receive hands-free calls.

Note: *You must switch the ignition and radio on.*

Note: *To scroll through the menus, press the up or down arrows on your audio system.*

1. Make sure the Bluetooth feature on your cell phone is switched on before starting the search. Refer to your device's manual if necessary.
2. Press the **PHONE** button. When the audio display indicates that no phones are paired, select the option to add.
3. When a message to begin pairing appears in the audio display, search for SYNC on your cell phone to start the pairing process.
4. Select SYNC on your cell phone.
5. Wait until the PIN appears on the phone display. Compare the PIN on the phone with the PIN shown in the audio display and accept the request on the phone and the vehicle display. The display indicates when the pairing is successful.

Note: *In some cases the phone will request to enter a PIN. Enter the six-digit PIN provided by the system in the audio display. The display indicates when the pairing is successful.*

Depending on your cell phone's capability and your market, the system may prompt you with questions such as setting the current cell phone as the primary cell phone (the cell phone the system automatically tries to connect with first when you switch the ignition on) or downloading your phonebook.

Fiesta (CCN) Vehicles Built From: 12-01-2015 Vehicles Built Up To: 14-10-2015, CG3582en enGBR, Edition date: 12/2014, First Printing

The information display may show your cell phone's battery charge level and signal strength.

Using Voice Commands

Make sure to switch on your phone's Bluetooth feature before starting the search. See your device's manual if necessary.

Press the voice button and when prompted say:

Voice Command	Action and Description
(pair ([Bluetooth] device | phone | Bluetooth [audio]) | add phone)	Follow the instructions on the audio display.

Words in square brackets [ ] are optional and do not have to be spoken for the system to understand the command.

Depending on your phone's capability and your market, the system may prompt you with questions, such as setting the current phone as the primary phone (the phone SYNC automatically tries to connect with first upon vehicle start-up) and downloading your phonebook.

Pairing Subsequent Cell Phones

Wirelessly pairing your cell phone with the system allows you to make and receive hands-free calls.

Note: *You must switch the ignition and radio on.*

Note: *To scroll through the menus, press the up or down arrows on your audio system.*

1. Make sure the Bluetooth feature on your cell phone is switched on before starting the search. Refer to your device's manual if necessary.
2. Press the **PHONE** button.
3. Select the option for Bluetooth devices.
4. Press the **OK** button.
5. Select the option to add. This starts the pairing process.
6. When a message to begin pairing appears in the audio display, search for SYNC on your device to start the pairing process.
7. Select SYNC on your cell phone.
8. Wait until the PIN appears on the phone display. Compare the PIN on the phone with the PIN shown in the audio display and accept the request on the phone and the vehicle display. The display indicates when the pairing is successful.

Note: *In some cases the phone will request to enter a PIN. Enter the six-digit PIN provided by the system in the audio display. The display indicates when the pairing is successful.*

The system may prompt you with questions such as setting the current cell phone as the primary cell phone or downloading your phonebook.

Cell Phone Voice Commands

Press the voice button and when prompted say either:

Voice Command
(phone | Blackberry | iPhone | Mobile)
Then say any of the following:
call (___)
call ___ at home

Fiesta (CCN) Vehicles Built From: 12-01-2015 Vehicles Built Up To: 14-10-2015, CG3582en enGBR, Edition date: 12/2014, First Printing

Voice Command	
call ___ ([at] work | [(in | at) [the]] office)	
call ___ on (mobile | cell)	
call ___ on other	
dial [[a] number]	1
([go to] privacy [on] | transfer to phone | handsfree off)	2
(hold call [on] | (put | place) call on hold)	2
join (call | calls)	2
mute [call] [on]	2
(mute [call] off | Unmute [call])	2
(turn ringer on | silent mode off)	
(turn ringer off | silent mode [on])	

Voice Command	
[text] (messages | message)	3
Help	

___ is a dynamic listing, meaning that it could be the name of anything, such as a group, artist or song. For example you could say "Play artist The Beetles".

[1] See **Dial** table below.

[2] These commands are only valid while in a phone call.

[3] See the text message table below.

Phone book commands: When you ask SYNC to access things such as a phonebook name or number, the requested information appears in the display to view. Press the phone button and say, "Call" to call the contact.

Dial Commands

Press the voice button and when prompted say any of the following commands:

Command	Action
call (someone | [[a] name])	To call the contact.
dial [[a] number]	112 (one-one-two), 700 (seven hundred) etc.
Pound	
Number	0 (zero) to 9 (nine)
Asterisk	
clear	Deletes all entered digits
(delete | correct)	Deletes the last set of entered digits.
Plus	
Star	

Note: *To exit dial mode, press and hold the phone button or any button on the audio unit.*

Fiesta (CCN) Vehicles Built From: 12-01-2015 Vehicles Built Up To: 14-10-2015, CG3582en enGBR, Edition date: 12/2014, First Printing

Phonebook Hints

To hear how the SYNC system speaks a name browse phonebook, select a contact and press:

Menu Item
Hear it

Menu Commands

Press the voice button and when prompted say either:

Command
(turn ringer on | silent mode off)
(turn ringer off | silent mode [on])

Words in square brackets [ ] are optional and do not have to be spoken for the system to understand the command.

Making a Call

Press the voice button and when prompted say either:

Command	Action
call (someone | [[a] name])	
dial [[a] number]	Followed by a number. When the system confirms the number say:
(dial | send)	

To erase the last spoken digit say:

Command	Action
(delete | correct)	Or press the left arrow button on the audio unit.

To erase all spoken digits say:

Command	Action
clear	Or press and hold the left arrow button on the audio unit.

Fiesta (CCN) Vehicles Built From: 12-01-2015 Vehicles Built Up To: 14-10-2015, CG3582en enGBR, Edition date: 12/2014, First Printing

To end the call, press the end call button on the steering wheel or select the end call option in the audio display and press **OK**.

Receiving a Call

When receiving a call, you can:

- Answer the call by pressing the accept call button on the steering wheel or by selecting the accept call option in the audio display. Press the **OK** button.
- Reject the call by pressing the reject call button on the steering wheel or by selecting the reject call option in the audio display. Press the **OK** button.
- Ignore the call by doing nothing.

Cell Phone Options During an Active Call

During an active call, you have extra menu features which become available, for example putting a call on hold.

To access this menu, choose one of the options available at the bottom of the audio display or select the option for more.

Message	Description and Action
Mic. off	Turn your vehicle's microphone off. To turn the microphone on, select the option again.
Privacy	Switch a call from an active hands-free environment to your cell phone for a more private conversation. When selected, the audio display will indicate the call is private.
Hold	Put an active call on hold. When selected, the audio display will indicate the call is on hold.
Dial a number	Enter numbers using the audio system numeric keypad, for example numbers for passwords.
Join calls	Join two separate calls. The system supports a maximum of three callers on a multi-party or conference call. 1. Select the option for more. 2. Access the desired contact through the system or use voice commands to place the second call. Once actively in the second call, select the option for more. 3. Scroll to the option to join calls and press the **OK** button.
Phonebook	Access your phonebook contacts. 1. Select the option for more. 2. Scroll to the option for phonebook and press the **OK** button. 3. Scroll through your phonebook contacts.

Fiesta (CCN) Vehicles Built From: 12-01-2015 Vehicles Built Up To: 14-10-2015, CG3582en enGBR, Edition date: 12/2014, First Printing

Message	Description and Action
	4. Press the **OK** button again when the desired selection appears in the audio display. 5. Press the **OK** button or dial button to call the selection.
Call history	Access your call history log. 1. Select the option for more. 2. Scroll to the option until call history appears. Press the **OK** button. 3. Scroll through your call history options (incoming, outgoing or missed). 4. Press the **OK** button again when the desired selection appears in the audio display. 5. Press the **OK** button or dial button to call the selection.

Accessing Features Through the Cell Phone Menu

You can access your call history, phonebook, sent text messages as well as access cell phone and system settings. You can also access advanced features such as emergency assistance.

The system attempts to automatically re-download your phonebook and call history each time your cell phone connects to the system. You must turn on the auto download feature if your cell phone supports it.

Note: *This is a cell phone dependent feature.*

1. Press the **PHONE** button to enter the cell phone menu.
2. Select one of the options available.

Message	Description and Action
Dial a number	Dial a number using the audio system numeric keypad.
Redial	Redial the last number called (if available). Press the **OK** button to select.
Phonebook	Access your downloaded phonebook. 1. Press the **OK** button to confirm and enter. You can use the options at the bottom of the screen to quickly access an alphabetical category. You can also use the letters on the keypad to jump in the list. 2. Scroll through your phonebook contacts.

Fiesta (CCN) Vehicles Built From: 12-01-2015 Vehicles Built Up To: 14-10-2015, CG3582en enGBR, Edition date: 12/2014, First Printing

Message	Description and Action
	3. Press the **OK** button again when the desired selection appears in the audio display. 4. Press the **OK** button or dial button to call the selection.
Call history	Access any previously dialed, received or missed calls. 1. Press the **OK** button to select. 2. Scroll to select either incoming calls, outgoing calls or missed calls. Press the **OK** button to make your selection. 3. Press the **OK** button or dial button to call the selection.
Speed Dial	Select one of 10 speed dial entries. To set a speed dial entry, go to the phonebook and press and hold one of the numbers on the audio system numeric keypad.
Text messaging	Send, download and delete text messages.
BT Devices	Access the option for Bluetooth device menu listings (add, connect, set as primary, on or off, delete).
Phone settings	View various settings and features on your cell phone.
Emerg. Assist.	Turn the SYNC emergency assistance feature on or off.

Text Messaging

The system allows you to receive, send, download and delete text messages. The system can also read incoming text messages to you so that you do not have to take your eyes off the road.

Note: *This is a cell phone dependent feature.*

Receiving a Text Message

Note: *This is a phone-dependent feature. Your phone must support downloading text messages using Bluetooth to receive incoming text messages.*

Note: *This is a speed-dependent feature and is only available when your vehicle is traveling at 3.1 mph (5 km/h) or less.*

When a new message arrives, an audible tone sounds and the audio display indicates you have a new message.

To hear the message you can say:

Voice command	Description and action
(listen to | read) ([text] message)	Select this option to have the system read the message to you.

Fiesta (CCN) Vehicles Built From: 12-01-2015 Vehicles Built Up To: 14-10-2015, CG3582en enGBR, Edition date: 12/2014, First Printing

Using the screen you also have the following options:

Menu Item	Description and action		
Ignore	Select this option, or do nothing, and the message goes into your text message inbox.		
View	Select the view option to open the text message. Once selected, you have the ability to have the message read to you, to view other messages. For additional options select:		
	More...	If you select this option, use the arrow button to scroll through the following options:	
		Reply to sender	Press the **OK** button to access, and then scroll through a list of pre-defined messages to send.
		Call sender	Press the **OK** button to call the sender of the message.
		Forward msg.	Press the **OK** button to forward the message to anyone in your phonebook or call history. You can also choose to enter a number.

Sending, Downloading and Deleting Your Text Messages

1. Press the **PHONE** button.
2. Select the text messaging option, then press the **OK** button.

Choose from the following:

Message	Description and Action
New	When you select the option to send a text message, a list of pre-defined messages appear in the audio display. Allows you to send a new text message based on a pre-defined set of 15 messages.
View	Allows you to read the full message and in addition provides the option to have the message read out to you by the system. To go to the next message select the more option. This allows you to reply to the sender, call the sender or forward the message.
Delete	Allows you to delete current text messages from the system (not your cell phone). The audio display indicates when all your text messages have been deleted.
More...	Allows you to delete all messages or to manually trigger a download of all unread messages from your cell phone.

Fiesta (CCN) Vehicles Built From: 12-01-2015 Vehicles Built Up To: 14-10-2015, CG3582en enGBR, Edition date: 12/2014, First Printing

Sending a Text Message

1. Select the send option when the desired selection is highlighted in the audio display.
2. Select the confirmation option when the contact appears and press the **OK** button again to confirm when the system asks if you would like to send the message. Each text message is sent with a pre-defined signature.

Note: *You can send text messages either by choosing a contact from the phonebook and selecting the text option from the audio display or by replying to a received message in the inbox.*

Note: *Only one recipient is allowed per text message.*

Accessing Your Cell Phone Settings

These are cell phone dependent features. Your cell phone settings allow you to access and adjust features such as your ringtone, text message notification, modify your phonebook and set up automatic download.

1. Press the **PHONE** button.
2. Scroll until the phone settings option appears, then press the **OK** button.
3. Scroll to select from the following options:

Message	Description and Action
Set as master	If this option is checked, the system will use this cell phone as the master when there is more than one cell phone paired to the system. This option can be changed for all paired cell phones (not only for the active one) using the Bluetooth devices menu.
Phone status	See the cell phone name, provider name, cell phone number, signal level and battery level. When done, press the left arrow button to return to the cell phone status menu.
Set ringtone	Select which ringtone sounds during an incoming call (one of the system's or your cell phone's). If your cell phone supports in-band ringing, your cell phone's ringtone sounds when you choose the cell phone ringtone option. 1. Press the **OK** button to select and scroll to hear each ringtone. 2. Press the **OK** button to select.
Text msg notify	Have the option of hearing an audible tone to notify you when a text message arrives. Press the **OK** button to turn the audible tone on or off.
Phonebook pref.	Modify the contents of your phonebook, e.g. add, delete, download. Press the **OK** button to select and scroll between the options in the table below.

Fiesta (CCN) Vehicles Built From: 12-01-2015 Vehicles Built Up To: 14-10-2015, CG3582en enGBR, Edition date: 12/2014, First Printing

To modify the phone book preferences, choose from the following:

Message	Description and Action
Add contacts	Push the desired contacts on your cell phone. Refer to your device's manual on how to push contacts. Press the **OK** button to add more contacts from your phonebook.
Delete	When a message asking you to delete appears, select the option to confirm. Press the **OK** button to delete the current phonebook and call history. The system takes you back to the menu for phone settings.
Download now	Press the **OK** button to select and download your phonebook to the system.
Auto-download	When automatic download is switched on, any changes, additions or deletions saved in the system since your last download are deleted. When automatic download is switched off, your phonebook will not be downloaded when your cell phone connects to the system. Your phonebook, call history and text messages can only be accessed when your paired cell phone is connected to the system. Check or uncheck this option to automatically download your phonebook each time your cell phone connects to the system. Downloading times are cell phone dependent and quantity dependent.

Bluetooth Devices

This menu provides access to your Bluetooth devices. Use the arrow buttons to scroll through the menu options. It allows you to add, connect and delete devices and set a cell phone as primary.

Bluetooth Devices Menu Options

1. Press the **PHONE** button.
2. Scroll until the Bluetooth device option appears, then press the **OK** button.
3. Scroll to select from the following options:

Message	Description and Action
Add	Pair additional cell phones to the system. 1. Select the option to add to start the pairing process. 2. When a message to begin pairing appears in the audio display, search for **SYNC** on your cell phone. Refer to your device's manual if necessary. 3. Select SYNC on your cell phone.

Fiesta (CCN) Vehicles Built From: 12-01-2015 Vehicles Built Up To: 14-10-2015, CG3582en enGBR, Edition date: 12/2014, First Printing

Message	Description and Action
	4. Wait until the PIN appears on the phone display. Compare the PIN on the phone with the PIN shown in the audio display and accept the request on the phones and the vehicles display. The display indicates when the pairing is successful.* 5. When the option to set the cell phone as the primary cell phone appears, select either yes or no. 6. Depending on the functionality of your cell phone, the system may ask you extra questions (for example, if you would like to download your phonebook). Select either yes or no to confirm your response.
Delete	After deleting a cell phone from the list, the cell phone can only be connected again by repeating the full pairing process. Select the delete option and confirm when the system asks to delete the selected device.
Master	The system attempts to connect with the primary cell phone every time you switch the ignition on. When a cell phone is selected as primary, it appears first in the list and is marked with an asterisk. Set a previously paired cell phone as your primary cell phone. Select the master option to confirm the primary cell phone.
Conn.	Connect a previously paired cell phone. You can only have one cell phone connected at a time to use the cell phone functionality. When another cell phone is connected, the previous cell phone will be disconnected from the telephone services. The system allows you to use different Bluetooth devices for the cell phone functionality and the Bluetooth audio music playback feature at the same time.
Discon.	Disconnects the selected cell phone. Select this option and confirm when asked to. After disconnecting a cell phone, it can be connected again without repeating the full pairing process.

*In some cases the phone will request to enter a PIN. Enter the six-digit PIN provided by the system in the audio display. The display indicates when the pairing is successful.

System Settings

1. Press the **MENU** button.
2. Select the SYNC settings option, then press the **OK** button.
3. Scroll to select from the following options:

Fiesta (CCN) Vehicles Built From: 12-01-2015 Vehicles Built Up To: 14-10-2015, CG3582en enGBR, Edition date: 12/2014, First Printing

Message	Description and Action
Bluetooth on	Check or uncheck this option to turn the Bluetooth interface of the system on or off. Select this option then press the **OK** button to change the option's status.
Set defaults	This selection does not erase your indexed information (phonebook, call history, text messages and paired devices). Select this option and confirm when prompted in the audio display. Return to the factory default settings.
Master reset	Completely erase all information stored on the system (phonebook, call history, text messages and paired devices) and return to the factory default settings. Select this option and confirm when prompted in the audio display. The display indicates when complete and the system takes you back to the previous menu.
Install on SYNC	Install applications or software updates you have downloaded. Select this option and confirm when prompted in the audio display. There must be a valid SYNC application or update available on the USB thumb drive in order to finish an installation successfully.
System info	Display the system's version numbers as well as its serial number. Press the **OK** button to select.
Voice settings	The voice settings submenu contains various options. See **Using Voice Recognition** (page 238).
Browse USB	Browse the actual menu structure of the connected USB device. Press the **OK** button and use the up or down arrows to scroll through the folders and files. Use the left or right arrows to enter and leave a folder. Media content can be directly selected for playback from this menu.
Emerg. Assist.	You can turn the emergency assistance feature on or off. See **SYNC™ Applications and Services** (page 252).

SYNC™ APPLICATIONS AND SERVICES

A list of available applications appears. Each application may have its own specific settings.

Press the **MENU** button to enter the system menu.

Fiesta (CCN) Vehicles Built From: 12-01-2015 Vehicles Built Up To: 14-10-2015, CG3582en enGBR, Edition date: 12/2014, First Printing

Message	Description and Action
SYNC-Apps	Scroll to this option, and then press **OK**.

SYNC Emergency Assistance

WARNINGS

For this feature to work, your cell phone must have Bluetooth and be compatible with the system.

Always place your cell phone in a secure location inside your vehicle. Failure to do so may cause serious injury to someone or damage the cell phone which could prevent this feature from working correctly.

Unless the feature setting is switched on prior to a crash, the system will not attempt to place an emergency call which could delay the response time, potentially increasing the risk of serious injury or death. Do not wait for the system to make an emergency call if you can do it yourself. Dial emergency services immediately to avoid a delayed response time. If you do not hear Emergency Assistance within five seconds of the crash, the system or cell phone may be damaged or non-functional.

If a crash deploys an airbag or triggers the fuel pump shut off, the system may contact emergency services by dialing 112 (the wireless emergency number that works in most European countries) through a paired and connected cell phone. For more information about the system and Emergency Assistance, visit the regional Ford website.

Note: *Before selecting this feature, you must read the Emergency Assistance privacy notice later in this section for important information.*

Note: *When you switch this feature on or off, that setting applies for all paired cell phones. If you have turned this feature off and a previously paired phone connects when you switch on the ignition, either a voice message plays, a display message or icon is shown, or both.*

Note: *Every cell phone operates differently. While this feature works with most cell phones, some cell phones may experience difficulties using this feature.*

Note: *Make sure you are familiar with the information about airbag deployment. See* ***Supplementary Restraints System*** *(page 24).*

Switching Emergency Assistance On and Off

Press the **MENU** button then select:

Message	Action
SYNC-Apps	Press **OK**.
Emergency Assistance	Press **OK**. Select the option you require and press **OK**.

Fiesta (CCN) Vehicles Built From: 12-01-2015 Vehicles Built Up To: 14-10-2015, CG3582en enGBR, Edition date: 12/2014, First Printing

Display Options

If you switch on this feature, a confirmation message appears in the display.

If you switch off this feature, a dialog will appear in the display, which allows you to set a voice reminder.

Off with voice reminder provides a display and voice reminder when your cell phone connects and your vehicle starts.

Off without voice reminder provides a display reminder only without a voice reminder when your cell phone connects.

To make sure that Emergency Assistance works correctly:

- The system must have power and be working correctly at the time of the crash and during feature activation and use.
- You must switch on the feature before a crash.
- You must have a cell phone connected to the system.
- In certain countries, it may be necessary to have a valid and registered SIM card with credit in order to place and maintain an emergency call.
- A connected cell phone must have the ability to make and maintain an outgoing call at the time of the crash.
- A connected cell phone must have adequate network coverage, battery power and signal strength.
- Your vehicle must have battery power.

Note: *This feature only works in a European country or region where SYNC Emergency Assistance can call the local emergency services. Visit the regional Ford website for details.*

In the Event of a Crash

Note: *Not every crash deploys an airbag or triggers the fuel pump shut off (which may turn on Emergency Assistance). However, if Emergency Assistance is triggered the system tries to contact the emergency services. If a connected cell phone sustains damage or loses connection to the system, it searches for and tries to connect to any available previously paired cell phone. The system attempts to dial 112.*

Before making a call:

- If you do not cancel the call and SYNC makes a successful call, an introductory message plays for the emergency operator. After this message, there is hands-free communication between your vehicle's occupants and the operator.
- The system provides a short window of time (approximately 10 seconds) to cancel the call. If you do not cancel the call, the system attempts to dial 112.
- The system plays a message letting you know when it attempts to make an emergency call. You can cancel the call by selecting the relevant function button or by pressing the end call button on the steering wheel.

During a call:

- Emergency Assistance uses your vehicle GPS or cellular network information when available to determine the most appropriate language to use. It alerts the emergency operator of the crash and delivers the introductory message. This may include your vehicle GPS coordinates.
- The language the system uses to interact with the occupants of your vehicle may differ from the language used to deliver information to the emergency operator.

Fiesta (CCN) Vehicles Built From: 12-01-2015 Vehicles Built Up To: 14-10-2015, CG3582en enGBR, Edition date: 12/2014, First Printing

- After the delivery of the introductory message the voice line opens so that you can speak hands-free with the emergency operator.
- When the line is connected, you must be prepared to provide your name, phone number and location information immediately.

Note: *While the system provides information to the emergency operator, the system plays a message letting you know it is sending important information. It then lets you know when the line is open to start hands-free communication.*

Note: *During an Emergency Assistance call, an emergency priority screen appears which contains vehicle GPS coordinates when available.*

Note: *It is possible that GPS location information is not available at the time of the crash; in this case, Emergency Assistance will still attempt to place an emergency call.*

Note: *It is possible that the emergency services will not receive the GPS coordinates; in this case, hands-free communication with an emergency operator is available.*

Note: *The emergency operator may also receive information from the cellular network such as cell phone number, cell phone location and cell phone carrier name independent from SYNC Emergency Assistance.*

Emergency Assistance may not work if:

- Your cell phone or Emergency Assistance hardware sustains damage in the crash.
- The vehicle battery or the system has no power.
- A crash ejects your cell phone from your vehicle.
- You do not have a valid and registered SIM card with credit in your cell phone.
- You are in a European country or region where the SYNC Emergency Assistance cannot place the call. Visit the regional Ford website for details.

Important Information about the Emergency Assistance Feature

Emergency Assistance does not currently call emergency services in the following markets: Albania, Belarus, Bosnia and Herzegovina, Macedonia, Netherlands, Ukraine, Moldova and Russia.

Visit the regional Ford website for the latest details.

Emergency Assistance Privacy Notice

When you switch on Emergency Assistance, it may disclose to emergency services that your vehicle has been in a crash involving the deployment of an airbag or activation of the fuel pump shut off. This feature has the capability to disclose your location information to the emergency operator or other details about your vehicle or crash to provide the most appropriate emergency services.

If you do not want to disclose this information, do not switch on the feature.

SYNC AppLink

The system enables voice and manual control of SYNC AppLink enabled smartphone apps. Once an app is running through AppLink, you can control main features of the app through voice commands and manual controls.

Note: *You must pair and connect your smartphone to SYNC to access AppLink.*

Note: *iPhone users need to connect the phone to the USB port.*

Note: *Android users need to connect the phone to SYNC using Bluetooth.*

Fiesta (CCN) Vehicles Built From: 12-01-2015 Vehicles Built Up To: 14-10-2015, CG3582en enGBR, Edition date: 12/2014, First Printing

Note: *For information on available apps, supported smartphone devices and troubleshooting tips please visit the Ford website.*

Note: *Make sure you have an active account for the app that you have downloaded. Some apps will work automatically with no setup. Other apps will want you to configure your personal settings and personalize your experience by creating stations or favorites. We recommend you do this at home or outside of your vehicle.*

To Access Using the SYNC Menu

Scroll through the list of available applications and press **OK** to select an app. Once an app is running through SYNC, press the right arrow button to access the app menu. You can access various app features from here, for example thumbs up and thumbs down. Press the left arrow button to exit the app menu.

Press the **MENU** button then select:

Message	Description and Action
SYNC-Apps	
Mobile Apps	Scroll to this option, and then press **OK**.
Find new Apps	Select this option if the app required is not listed.

Note: *If a SYNC AppLink compatible app cannot be found, make sure the required app is running on the mobile device.*

To Access Using Voice Commands

Press the voice button and when prompted say:

Command	Description and Action
mobile (apps | applications)	Say the name of the application after the tone. The application will start. While an app is running through SYNC, you can press the voice button and speak commands specific to the app.

The following voice commands are always available:

Command	Description and Action
[main menu] help	Use this command to hear a list of available voice commands.
mobile (apps | applications)	The system will prompt you to say the name of the app to start it.
list [mobile] (apps | applications)	The system will list all of the currently available mobile apps.

Fiesta (CCN) Vehicles Built From: 12-01-2015 Vehicles Built Up To: 14-10-2015, CG3582en enGBR, Edition date: 12/2014, First Printing

Command	Description and Action
find [new] [mobile] (apps | applications)	The system will search your connected mobile device for SYNC compatible apps.
<the name of the app>	Say the name of an app to start it on SYNC.
<the name of the app> Help	The system will list the available voice commands for the requested app.
(quit | exit | close)	Use this command followed by the name of the app.

Enabling and Disabling Push Notifications

Some apps can send push notifications. A push notification is an alert from an app running in the background and is delivered by voice, pop up or both. This may be particularly useful for news or location based apps.

Press the **MENU** button then select:

Message	Description and Action
SYNC-Apps	
Mobile Apps	
Settings	
All Apps	If push notifications are supported, this setting will be listed. Select to enable or disable the feature as required.

Enabling SYNC Mobile Apps

To use the system you must consent to send and receive app authorization information and updates, using the data plan associated with the connected device.

Data is sent to Ford in the United States through the connected device. The information is encrypted and includes your VIN, SYNC module number, anonymous usage statistics and debugging information. Updates may take place automatically.

Note: *You must enable mobile apps for each connected device the first time you select a mobile app using the system.*

Note: *Standard data rates will apply. Ford is not responsible for any additional charges you may receive from your service provider, when your vehicle sends or receives data through the connected device. This includes any additional charges incurred due to driving in areas when roaming out of a home network.*

Fiesta (CCN) Vehicles Built From: 12-01-2015 Vehicles Built Up To: 14-10-2015, CG3582en enGBR, Edition date: 12/2014, First Printing

App Status

You can view the current status of an app in the settings menu. There are three possible statuses:

Message	Description and Action
Update needed	The system has detected a new app requiring authorization or a general permissions update is required.
Up-to-date	No update is required.
Updating...	The system is trying to receive an update.

Options in the settings menu:

Message	Description and Action
Request Update	If an update is required and you want to manually request the update, for example when you are in a Wi-Fi hotspot.
Disable Updates	Select this option to disable automatic updates.

App Permissions

Permissions are divided by groups. You can grant these group permissions individually. You can change a permission group status any time when not driving, by using the settings menu.

When you launch an app using SYNC, the system may ask you to grant certain permissions, for example:

- To allow your vehicle to provide vehicle information to the app including, but not limited to: Fuel level, fuel consumption, engine speed, battery voltage, odometer, VIN, external temperature, gear position, tire pressure, ambient temperature, date and time.
- To allow your vehicle to provide driving characteristic information, including, but not limited to: MyKey, seat belt status, engine speeds, braking events, brake pedal switch, acceleration, accelerator pedal position, clutch pedal switch, trip length, trip time, trip cost, percent engine on time, and percent of time at speed.

Fiesta (CCN) Vehicles Built From: 12-01-2015 Vehicles Built Up To: 14-10-2015, CG3582en enGBR, Edition date: 12/2014, First Printing

- To allow your vehicle to provide location information, including: GPS and speed.
- To allow the app to send push notifications using the vehicle display and voice capabilities while running in a background state.

Note: *You will only need to grant permissions the first time you use an app with SYNC.*

Note: *We are not responsible or liable for any damages or loss of privacy relating to usage of an app, or dissemination of any vehicle data that you approve us to provide to an app.*

USING SYNC™ WITH YOUR MEDIA PLAYER

You can access and play music from your media player through your vehicle's speaker system using the system's media menu or voice commands. You can also sort and play your music by specific categories, for example artist or albums.

SYNC is capable of hosting nearly any media player including: iPod, Zune, Plays from device players, and most USB drives. SYNC also supports audio formats, for example MP3, WMA, WAV and ACC.

Confirm that the USB device has been formatted correctly and has the following specifications:

- USB 2.0.
- File format must be FAT16/32.

Note: *NTFS file format is not supported.*

The format of the audio files on the USB device must be:

- MP3.
- Non DRM protected WMA.
- WAV.
- AAC.

Connecting Your Media Player to the USB Port

Note: *If your media player has a power switch, make sure you switch on the device.*

To Connect Using Voice Commands

1. Plug the device into your vehicle's USB port.
2. Press the voice button and when prompted say:

Voice Command	Action and Description
(USB [stick] | iPod | MP3 [player])	You can now play music by saying any of the appropriate voice commands. Refer to the media voice commands.

You do not need to say words that appear within square brackets. For example, for where (USB [stick] | iPOD | MP3 [player]) appears, you can say USB or USB stick.

To Connect Using the System Menu

1. Plug the device into your vehicle's USB port.
2. Press the **Media** button (next to the audio display) until an initializing message appears in the display.

Fiesta (CCN) Vehicles Built From: 12-01-2015 Vehicles Built Up To: 14-10-2015, CG3582en enGBR, Edition date: 12/2014, First Printing

Menu Item	Action and Description
Browse USB	Depending on how many media files are on your connected device, an indexing message may appear in the display. When indexing is complete, the screen returns to the playback menu.

Choose from the following:

Menu Item
Play all
Playlists
Songs
Artists
Albums
Genres
Browse USB
Reset USB
Exit

What's Playing?

At any time during playback, you can press the voice button and ask the system what is playing. The system reads the metadata tags of the current track, if populated.

Media Voice Commands

Press the voice button and when prompted say:

Voice Command	Action and Description
(USB [stick] | iPod | MP3 [player])	You can now play music by saying any of the appropriate voice commands.

You can say any of the voice commands that appear within open and close brackets that are separated by |. For example, where; (what's | what is) appears you say; what's or what is.

You must say any of the voice commands that appear outside of open and close brackets. For example, where; who plays this (what's | what is) playing, you must say; who plays this (what's or what is) playing.

Fiesta (CCN) Vehicles Built From: 12-01-2015 Vehicles Built Up To: 14-10-2015, CG3582en enGBR, Edition date: 12/2014, First Printing

Voice Command	Description and Action
pause	Pauses device playback.
play	Resumes device playback.
play [album] ___	
play all	Play all media on the device from the first track to the last.
play [artist] ___	
play [genre] ___	
play [playlist] ___	
next [track | title | song | file | podcast | chapter | episode]	Plays the next track on the current media.
previous [track | title | song | file | podcast | chapter | episode]	Plays the previous track on current media.
[play] (similar music | more like this)	Creates a play list of similar genre to the one currently playing.
play [song | track | title | file] ___	
repeat off	
repeat one [on]	Repeats the current track.
shuffle [all] [on]	Plays the current play list in a random order. (Not all devices support this command.)
shuffle off	
((who's | who is) this | who plays this | (what's | what is) playing [now] | (what | which) (song | track | artist) is this | (who's | who is) playing | (what's | what is) this)	At any time during playback, you can press the voice button and ask the system what is playing. The system reads the metadata tags (if populated) of the current track.

___ is a dynamic listing, meaning that it could be the name of anything, such as a group, artist or song. For example you could say "Play artist The Beatles".

Examples of USB Commands

SYNC provides the user with many intuitive ways to find and play a song using voice. For example, if we have a song called "Penny Lane" from the album "Magical Mystery Tour" we can say the following to play this song:

Fiesta (CCN) Vehicles Built From: 12-01-2015 Vehicles Built Up To: 14-10-2015, CG3582en enGBR, Edition date: 12/2014, First Printing

- Play song "Penny Lane".
- Play "Penny Lane".

If we wanted to play the entire album, we can say:

- Play album "Magical Mystery Tour".
- Play "Magical Mystery Tour".

Bluetooth Audio

The system is also capable of playing music from your cellular phone through Bluetooth.

To switch the Bluetooth audio on, use the **MEDIA** button (next to the audio display) or **Source** button, or press the voice button and when prompted say:

Voice Command
Bluetooth audio

Then any of the following:

Voice Command
pause
play
next [track | title | song | file | podcast | chapter | episode]
previous [track | title | song | file | podcast | chapter | episode]

Media Menu Features

The media menu allows you to select how to play your music, for example by artist, genre, shuffle or repeat, and to find similar music or reset the index of your USB devices.

Press **AUX** to select USB playback.

Message	Description and Action
Options	This will enter the media menu.

Then any of the following:

Message	Description and Action
Shuffle	Choose to shuffle or repeat your music. Once you make your choice, it remains on until you switch it off.
Repeat track	Choose to shuffle or repeat your music. Once you make your choice, it remains on until you switch it off.
Similar music	You can play similar types of music to the current playlist from the USB port. The system uses the metadata information of each track to compile a playlist. The system then creates a new list of similar tracks and then begins playing. Each track must have the metadata tags populated for this feature. With certain playing devices, if your metadata tags

Fiesta (CCN) Vehicles Built From: 12-01-2015 Vehicles Built Up To: 14-10-2015, CG3582en enGBR, Edition date: 12/2014, First Printing

Message	Description and Action
	are not populated, the tracks will not be available in voice recognition, the play menu or this option. However, if you place these tracks onto your playing device in mass storage device mode they are available in voice recognition, the play menu or this option. The system places unknowns into any unpopulated metadata tag.
Reset USB	Resets the USB index. After the new indexing is complete you can choose what to play from the USB song library.

Accessing Your USB Song Library

1. Plug the device into your vehicle's USB port.
2. Press **AUX** to select USB playback.

Message	Description and Action
Browse USB	This menu allows you to select and play your media files by artist, album, genre, playlist and track or even to browse what is on your USB device.

If there are no media files to access, the display indicates there is no media. If there are media files, you have the following options to scroll through and select:

Message	Description and Action
Play all	Play all indexed media files from your playing device one at a time in numerical order.* 1. Press **OK** to select. The first track title appears in the display.
Playlists	Access your playlists from formats, ASX, M3U, WPL or MTP.* 1. Press **OK** to select. 2. Scroll to select the desired playlist, and then press **OK**.
Songs	Search for and play a specific indexed track. * 1. Press **OK** to select. 2. Scroll to select the desired track, and then press **OK**.

Fiesta (CCN) Vehicles Built From: 12-01-2015 Vehicles Built Up To: 14-10-2015, CG3582en enGBR, Edition date: 12/2014, First Printing

Message	Description and Action
Artists	Sort all indexed media files by artist. Once selected, the system lists and then plays all artists and tracks alphabetically.* 1. Press **OK** to select. 2. Scroll to select the desired artist, and then press **OK**.
Albums	Sort all indexed media files by albums.* 1. Press **OK** to select. 2. Scroll to select the desired albums, and then press **OK**.
Genres	Sort indexed music by genre type.* 1. Press **OK** to select. 2. Scroll to select the desired genre, and then press **OK**.
Browse USB	Browse all supported media files on your media player connected to the USB port. You can only view media files that are compatible with SYNC; other saved files are not visible. 1. Press **OK** to select. 2. Scroll to browse indexed media files on your flash drive, and then press **OK**.
Reset USB	Resets the USB index. After the new indexing is complete, you can choose what to play from the USB song library.

* You can use the buttons at the bottom of the audio display to jump to a certain alphabetical category quickly. You can also use the letters on the numeric keypad to jump in the list.

Using Voice Commands

You can access and view your USB songs using voice commands.

Plug the device into your vehicle's USB port.

Fiesta (CCN) Vehicles Built From: 12-01-2015 Vehicles Built Up To: 14-10-2015, CG3582en enGBR, Edition date: 12/2014, First Printing

Press the voice button and when prompted, say any of the following commands:

Voice Command
(browse | search | show) all (album | albums)
(browse | search | show) all (artist | artists)
(browse | search | show) all (genre | genres)
(browse | search | show) all (playlist | playlists)
(browse | search | show) all (song | songs | title | titles | file | files | track | tracks)
(browse | search | show) album ___
(browse | search | show) artist ___
(browse | search | show) genre ___
(browse | search | show) playlist ___

Line In Audio

To access the Line in audio source say:

Voice Command
((line | AV | audio video) in | AUX | audio video)

USB 2 (If Equipped)

Your vehicle may come equipped with an additional USB port. If so, USB 1 is located at the front of the vehicle at the bottom of the instrument panel. USB 2 is located inside the storage compartment of the vehicle's center console.

You can plug in an additional USB device into the second USB port.

Note: *SYNC only supports one connected iOS (Apple) devices at a time (whichever one you plug in first). When you connect a second iOS device, the systems charges it, but does not support playback from it.*

Voice Commands for Audio Sources

Your voice system allows you to change audio sources with a simple voice command.

Press the voice button and when prompted say:

Voice Command
(music | audio | entertainment) [system]
Below are a few examples of voice commands you can use.
[tune [to]] AM
[tune [to]] AM1
[tune [to]] (AM | medium wave) (autostore | AST | autoset)
[tune [to]] (AM | medium wave) 2
Bluetooth (audio | stereo)
(disc | CD [player]) play
[tune [to]] FM
[tune [to]] FM1
[tune [to]] FM (autostore | AST | autoset) preset ___
[tune [to]] FM 2
((line | AV | audio video) in | AUX | audio video)
Radio

Fiesta (CCN) Vehicles Built From: 12-01-2015 Vehicles Built Up To: 14-10-2015, CG3582en enGBR, Edition date: 12/2014, First Printing

Voice Command
(USB [stick] | iPod | MP3 [player])
((who's | who is) this | who plays this | (what's | what is) playing [now] | (what | which) (song | track | artist) is this | (who's | who is) playing | (what's | what is) this)
Help

Radio Voice Commands

If you are listening to the radio, press the voice button, and then say any of the commands in the following table.

If you are not listening to the radio, press the voice button and, after the tone, say:

Voice Command
Radio
You can then say any of the following commands.
[tune [to]] AM
[tune [to]] AM1
[tune [to]] (AM | medium wave) (auto-store | AST | autoset)
[tune [to]] (AM | medium wave) 2
[tune [to]] ((AM | medium wave) ___ | ___ [AM | medium wave])
[tune [to]] (AM | medium wave) preset ___
[tune [to]] (AM | medium wave) 1 preset ___
[tune [to]] FM
[tune [to]] FM1

Voice Command
[tune [to]] FM (autostore | AST | autoset)
[tune [to]] FM 2
[tune [to]] (FM ___ | ___ [FM])
[tune [to]] FM (autostore | AST | autoset) preset ___
[tune [to]] FM preset ___
[tune [to]] FM 2 preset ___
[tune [to]] preset ___
tune [radio]
Help

CD Voice Commands

If you are listening to a CD, press the voice button, and then say any of the commands in the following table.

If you are not listening to a CD, press the voice button and, after the tone, say:

Voice Command
(disc | CD [player]) play
You can then say any of the following commands.
pause
play
[play] next track
[play] previous track
[play | change to] track [number] ___
repeat (track | song) [on] *

Fiesta (CCN) Vehicles Built From: 12-01-2015 Vehicles Built Up To: 14-10-2015, CG3582en enGBR, Edition date: 12/2014, First Printing

Voice Command
repeat folder [on]
repeat off
(shuffle | random | mix) [on | (tracks | songs) [on]] *
(shuffle | random | mix) (CD [player] | disc) [on]
(shuffle | random | mix) folder [on]
shuffle off

*You need to indicate to the system which track or folder to repeat or shuffle when using these commands.

Bluetooth Devices and System Settings

You can access these menus using the audio display. See **Using SYNC™ With Your Phone** (page 241).

SYNC™ TROUBLESHOOTING

Your SYNC system is easy to use. However, should questions arise, please refer to the tables below.

To check your cell phone's compatibility, visit the regional Ford website.

Cell phone issues		
Issue	**Possible cause**	**Possible solution**
A lot of background noise during a phone call.	The audio control settings on your cell phone may be affecting SYNC performance.	Refer to your device's manual about audio adjustments.
During a call, I can hear the other person but they cannot hear me.	Possible cell phone malfunction.	Try switching off your cell phone, resetting it or removing the battery, then trying again.
		Make sure that the microphone for SYNC is not set to off.
SYNC is not able to download my phonebook.	This is a cell phone-dependent feature.	Check your cell phone's compatibility.
	Possible cell phone malfunction.	Try switching off your cell phone, resetting it or removing the battery, then trying again.
		Try pushing your phonebook contacts to SYNC by selecting the option to add.
		You must switch on your cell phone and the automatic phonebook download feature on SYNC.

Fiesta (CCN) Vehicles Built From: 12-01-2015 Vehicles Built Up To: 14-10-2015, CG3582en enGBR, Edition date: 12/2014, First Printing

Cell phone issues		
Issue	**Possible cause**	**Possible solution**
The system says "Phonebook downloaded" but my SYNC phonebook is empty or is missing contacts.	Limitations on your cell phone's capability.	Try pushing your phonebook contacts to SYNC by selecting the option to add.
		If the missing contacts are stored on your SIM card, try moving them to your cell phone's memory.
		Remove any pictures or special ring tones associated with the missing contact.
		You must switch on your cell phone and the automatic phonebook download feature on SYNC.
I am having trouble connecting my cell phone to SYNC.	This is a cell phone-dependent feature.	Check your cell phone's compatibility.
	Possible cell phone malfunction.	Try switching off your cell phone, resetting it or removing the battery, then trying again.
		Try deleting your device from SYNC and deleting SYNC from your device, then trying again.
		Always check the security and auto accept prompt settings relative to the SYNC Bluetooth connection on your cell phone.
		Update your cell phone's firmware.
		Switch off the auto download setting.
Text messaging is not working on SYNC.	This is a cell phone-dependent feature.	Check your cell phone's compatibility.
	Possible cell phone malfunction.	Try switching off your cell phone, resetting it or removing the battery, then trying again.
	iPhone	• Go to your cell phone's Settings. • Go to the Bluetooth Menu. • Make sure the connection status shows Not Connected. • Press the blue circle to enter the next menu. • Turn on Show Notifications. • Turn on Sync Contacts.

Fiesta (CCN) Vehicles Built From: 12-01-2015 Vehicles Built Up To: 14-10-2015, CG3582en enGBR, Edition date: 12/2014, First Printing

Cell phone issues		
Issue	**Possible cause**	**Possible solution**
		Your iPhone is now set up to forward incoming text messages to SYNC. Repeat these steps for every other Sync vehicle you are connected to. Your iPhone will only forward incoming text messages to SYNC if it is unlocked. Replying to text messages using SYNC is not supported by iPhone. Text messages from WhatsApp and Facebook Messenger are not supported.
Audible text messages do not work on my cell phone.	This is a cell phone-dependent feature.	Your cell phone must support downloading text messages through Bluetooth to receive incoming text messages.
		Access the text messaging menu of SYNC to see if your cell phone supports the feature. Press the **PHONE** button and then scroll and select the option for text messaging, then press **OK**.
	This is a cell phone limitation.	Because each cell phone is different, refer to your device's manual for the specific cell phone you are pairing. In fact, there can be differences between cell phones due to brand, model, service provider and software version.

USB and media issues		
Issue	**Possible cause**	**Possible solution**
I am having trouble connecting my device.	Possible device malfunction.	Try switching off the device, resetting it or removing the battery, then trying again.
		Make sure you are using the manufacturer's cable.
		Make sure correctly insert the USB cable to the device and your vehicle's USB port.
		Make sure that the device does not have an auto-install program or active security settings.

Fiesta (CCN) Vehicles Built From: 12-01-2015 Vehicles Built Up To: 14-10-2015, CG3582en enGBR, Edition date: 12/2014, First Printing

USB and media issues		
Issue	**Possible cause**	**Possible solution**
SYNC does not recognize my device when I start my vehicle.	This is a device limitation.	Make sure you are not leaving the device in your vehicle during very hot or cold temperatures.
Bluetooth audio does not stream.	This is a device-dependent feature.	Make sure you connect the device to SYNC and press play on your device.
	The device is not connected.	
SYNC does not recognize music that is on my device.	Your music files may not contain the correct artist, song title, album or genre information.	Make sure that all song details are populated.
	The file may be corrupted.	Try replacing the corrupt file with a new version.
	The song may have copyright protection that does not allow it to play.	Some devices require you to change the USB settings from mass storage to media transfer protocol class.
When I connect my iPhone or iPod Touch through the USB and Bluetooth Audio at the same time, I sometimes do not hear any sound.	This is a device limitation.	From the iPhone or iPod Touch music now playing screen, select the audio device airplay icon at the very bottom of your iPhone or iPod Touch screen.
		To listen to the iPhone or iPod Touch through Bluetooth Audio, select SYNC.
		To listen to the iPhone or iPod Touch through USB, select Dock Connector.

Fiesta (CCN) Vehicles Built From: 12-01-2015 Vehicles Built Up To: 14-10-2015, CG3582en enGBR, Edition date: 12/2014, First Printing

Voice command issues		
Issue	**Possible cause**	**Possible solution**
SYNC does not understand what I am saying.	You may be using the wrong voice commands.	Review the cell phone voice commands and the media voice commands at the beginning of their respective sections.
		Refer to the audio display during an active voice session to find a list of voice commands there.
	You may be speaking too soon or at the wrong time.	The microphone for the system is either in your rear view mirror or in the headliner just above the windshield.
SYNC does not understand the name of a song or artist.	You may be using the wrong voice commands.	Review the media voice commands at the beginning of the media section.
	You may not be saying the name exactly as the system saved it.	Say the song or artist exactly as the system saved it. If you say, "Play Artist Prince", the system does not play music by Prince and the Revolution or Prince and the New Power Generation.
		Make sure you are saying the complete title such as "California remix featuring Jennifer Nettles".
		If the song titles are in capital letters, you have to spell them. LOLA requires you to say "L-O-L-A".
	The system may not be reading the name the same way you are saying it.	Do not use special characters in the title, as the system does not recognize them.
SYNC does not understand or is calling the wrong contact when I want to make a call.	You may be using the wrong voice commands.	Review the cell phone voice commands at the beginning of the cell phone section.
		You can also use the cell phone and media suggestion lists to get a list of possible suggestions when the system cannot fully understand you. See **Using Voice Recognition** (page 238).

Fiesta (CCN) Vehicles Built From: 12-01-2015 Vehicles Built Up To: 14-10-2015, CG3582en enGBR, Edition date: 12/2014, First Printing

Voice command issues		
Issue	**Possible cause**	**Possible solution**
	You may not be saying the name exactly as the system saved it.	Make sure you are saying the name exactly as the system saved it. For example, if the contact name is Joe Wilson, say "Call Joe Wilson".
		The system works better if you list full names such as "Joe Wilson" rather than "Joe".
	Contacts in your phonebook may be very short and similar or they may contain special characters.	Do not use special characters such as 123 or ICE as the system does not recognize them.
	Your phonebook contacts may be in capital letters.	If the contacts are in capital letters, you have to spell them. JAKE requires you to say "Call J-A-K-E".
The SYNC voice control system is having trouble recognizing foreign names stored on my cell phone.	You may be saying the foreign names using the currently selected language for SYNC.	SYNC applies the phonetic pronunciation rules of the selected language to the contact names stored on your cell phone.
		Helpful Hint: You can select your contact manually. Press **PHONE**. Select the option for phonebook and then contact name. Press the soft-key option to hear it. SYNC will read the contact name to you, giving you some idea of the pronunciation it is expecting.
The SYNC voice control system is having trouble recognizing foreign tracks, artists, albums, genres and playlist names from my media player or USB flash drive.	You may be saying the foreign names using the currently selected language for SYNC.	SYNC applies the phonetic pronunciation rules of the selected language to the names stored on your media player or USB flash drive. It is able to make some exceptions for very popular artist names (for example, U2) such that you can always use the English pronunciation for these artists.

Fiesta (CCN) Vehicles Built From: 12-01-2015 Vehicles Built Up To: 14-10-2015, CG3582en enGBR, Edition date: 12/2014, First Printing

Voice command issues		
Issue	**Possible cause**	**Possible solution**
The system generates voice prompts and the pronunciation of some words may not be accurate for my language.	SYNC uses text-to-speech voice prompt technology.	SYNC uses a synthetically generated voice rather than pre-recorded human voice.
		SYNC offers several new voice control features for a wide range of languages. Dialing a contact name directly from the phonebook without pre-recording (for example, “call John Smith”) or selecting a track, artist, album, genre or playlist directly from your media player (for example," play artist Madonna).
My previous Bluetooth voice control system allowed me to control the radio, CD, and climate control systems. Why can I not control these systems with SYNC?	The focus of SYNC is to control your mobile devices and the content stored on them.	SYNC offers significant capability beyond the previous system such as dialing a contact name directly from the phonebook without pre-recording (for example, “call John Smith”) or selecting a track, artist, album, genre or playlist directly from your media player (for example, " play artist Madonna).

Fiesta (CCN) Vehicles Built From: 12-01-2015 Vehicles Built Up To: 14-10-2015, CG3582en enGBR, Edition date: 12/2014, First Printing

General		
Issue	**Possible cause**	**Possible solution**
The language selected for the instrument cluster and information and entertainment display does not match the SYNC language (phone, USB, Bluetooth audio, voice control and voice prompts).	SYNC does not support the currently selected language for the instrument cluster and information and entertainment display.	SYNC only supports four languages in a single module for text display, voice control and voice prompts. The country where you bought your vehicle dictates the four languages based on the most popular languages spoken. If the selected language is not available, SYNC remains in the current active language.
		SYNC offers several new voice control features for a wide range of languages. Dialing a contact name directly from the phonebook without pre-recording (for example, “call John Smith”) or selecting a track, artist, album, genre or playlist directly from your media player (for example, play artist Madonna).

Fiesta (CCN) Vehicles Built From: 12-01-2015 Vehicles Built Up To: 14-10-2015, CG3582en enGBR, Edition date: 12/2014, First Printing

AppLink issues		
Issue	**Possible cause(s)**	**Possible solution(s)**
AppLink Mobile Applications: When I select "Find New Apps," SYNC does not find any applications.	An AppLink capable phone is not connected to SYNC.	Ensure you have a compatible smartphone; an Android with OS 2.3 or higher or an iPhone 3GS or newer with iOS 5.0 or higher. Additionally, ensure your phone is paired and connected to SYNC in order to find AppLink-capable apps on your device. iPhone users must also connect to SYNC's USB port with an Apple USB cable.
My phone is connected, but I still cannot find any apps.	AppLink-enabled apps are not installed and running on your mobile device.	Ensure you have downloaded and installed the latest version of the app from your phone's app store. Ensure the app is running on your phone. Some apps require you to register or login on the app on the phone before using them with AppLink. Also, some may have a "Ford SYNC" setting, so check the app's settings menu on the phone.
My phone is connected, my app(s) are running, but I still cannot find any apps.	Sometime apps do not properly close and re-open their connection to SYNC, over ignition cycles, for example.	Closing and restarting apps may help SYNC find the application if you cannot discover it inside the vehicle. On an Android device, if apps have an "Exit' or 'Quit' option, select that then restart the app. If the app does not have that option, you can also manually "Force Close" the app by going to the phone's settings menu, selecting 'Apps.' then finding the particular app and choosing 'Force stop.' Don't forget to restart the app afterwards, then select "Find New Apps" on SYNC.
		On an iPhone with iOS7+, to force close an app, double tab the home button then swipe up on the app to close it. Tab the home button again, then select the app again to restart it. After a few seconds, the app should then appear in SYNC's Mobile App's Menu.

Fiesta (CCN) Vehicles Built From: 12-01-2015 Vehicles Built Up To: 14-10-2015, CG3582en enGBR, Edition date: 12/2014, First Printing

AppLink issues		
Issue	**Possible cause(s)**	**Possible solution(s)**
My Android phone is connected, my app(s) are running, I restarted them, but I still cannot find any apps.	There is a bluetooth bug on some order versions of the Android OS that may cause apps that were found on your previous vehicle drive to not be found again if you have not turned off bluetooth.	Reset the Bluetooth on your phone by turning it off and then turning Bluetooth back on. If you are in your vehicle, SYNC should be able to automatically re-connect to your phone if you press the "Phone" button.
My iPhone phone is connected, my app is running, I restarted the app but I still cannot find it on SYNC.	The USB connection to SYNC may need to be reset.	Unplug the USB cable from the phone, wait a moment, and plug the USB cable back in to the phone. After a few seconds, the app should appear in SYNC's Mobile Apps Menu. If not, "Force Close" the application and restart it.
I have an Android phone. I found and started my media app on SYNC, but there is no sound or the sound is very low.	The bluetooth volume on the phone may be low.	Try increasing the Bluetooth volume of the device by using the device's volume control buttons which are most often found on the side of the device.
I can only see some of the AppLink apps running on my phone listed in SYNC's Mobile Apps Menu.	Some Android devices have a limited number of bluetooth ports apps can use to connect. If you have more AppLink apps on your phone than the number of availble Bluetooth ports, you will not see all of your apps listed in SYNC's mobile apps menu.	Force close or uninstall the apps you do not want SYNC to find. If the app has a "Ford SYNC" setting, disable that setting in the app's settings menu on the phone.

Fiesta (CCN) Vehicles Built From: 12-01-2015 Vehicles Built Up To: 14-10-2015, CG3582en enGBR, Edition date: 12/2014, First Printing

Press the relevant button on the unit bezel to access the system functions. This will take you into the selected mode.

For instructions on how to operate the audio unit and the available navigation features, see the relevant audio unit procedure. See **Audio System** (page 203).

Loading Map Data

WARNINGS

The indicated maximum speed may not be applicable to your vehicle. It is always your responsibility to control your vehicle, supervise any system and obey the correct speed limit. Failure to do so could result in loss of vehicle control.

The front glass on the liquid crystal display may break if hit with a hard object. If the glass breaks, do not touch the liquid crystalline material. In case of contact with the skin, wash immediately with soap and water.

Note: *Do not switch the ignition on or attempt to start the engine while the software is updating.*

Note: *Do not clean the unit with solvents or aerosol cleaning agents. Use only a damp cloth.*

Note: *The navigation SD card must be in the SD card slot to operate the navigation system. If you need a replacement SD card, see an authorized dealer.*

Note: *The SD card slot is spring-loaded. To remove the SD card, push the card in and release it. Do not attempt to remove the card without first pushing it in. This could cause damage.*

E129900

1. Load the navigation SD card into the slot.
2. Press the **NAV** button. The road safety warning confirms the map data import was successful.
3. The system is now ready to use.

For map updates and system upgrades, see an authorized dealer.

Note: *You can only use Ford licensed data.*

Road Safety

WARNING

Driving while distracted can result in loss of vehicle control, crash and injury. We strongly recommend that you use extreme caution when using any device that may take your focus off the road. Your primary responsibility is the safe operation of your vehicle. We recommend against the use of any handheld device while driving and encourage the use of voice-operated systems when possible. Make sure you are aware of all applicable local laws that may affect the use of electronic devices while driving.

Fiesta (CCN) Vehicles Built From: 12-01-2015 Vehicles Built Up To: 14-10-2015, CG3582en enGBR, Edition date: 12/2014, First Printing

Note: *You are ultimately responsible for the safe operation of your vehicle and must evaluate whether it is safe to follow route suggestions. Navigation features are provided only as an aid. Driving decisions based on observations of local conditions and existing traffic regulations must be observed. Do not follow route suggestions if they would result in an unsafe or illegal maneuver, an unsafe situation, or if you would be directed into an area that you consider unsafe. Maps used by this system may be inaccurate due to errors, changes in roads, traffic or driving conditions.*

Safety Information

If detailed viewing of route instructions is necessary, pull off the road when it is safe to do so and park your vehicle.

Setting a Route

Note: *After the first entry, the country selected will remain the default option until you manually change it.*

Press the **NAV** button and select:

Message	Action
Destination input	Starting at the top, select the country followed by either the postcode or city and street name, together with the house number or intersection. Use the arrow buttons to enter the destination details.
Start guidance	Select this after entering sufficient information.

The route is calculated and the screen returns to the main navigation screen. If prompted, select the type of route you require first. Follow the screen and voice prompts to reach your destination.

Note: *If required you can select different character screens by using the up and down arrow buttons.*

Note: *If you only need to navigate to a city center, just enter the city name and start guidance.*

Note: *If you only need to navigate to a district, within a city for example, just enter the district name and start guidance.*

Menu Structure

You can access the menu using the information and entertainment display control. See **Information Displays** (page 66).

For a description on some menu items refer to the relevant table.

Note: *Some options may appear slightly different or not at all if the items are optional.*

Message	
Route	Active guidance
	Route sections list
	Block next section

Fiesta (CCN) Vehicles Built From: 12-01-2015 Vehicles Built Up To: 14-10-2015, CG3582en enGBR, Edition date: 12/2014, First Printing

Message		
	Unblock route sections	
Destination input	Country	
	City/postcode	
	Street	
	District	
	Start guidance	
Traffic	TA	
	TMC for route	
	All TMC	
	Block next section	
	Route sections list	
	Unblock route sections	
Home address	Start guidance	
	Change address	
Last destinations		
Favourites	Favourites (A-Z)	
Points of interest	POIs nearby	
	Near destination	
	Along motorway	
	POIs near address	
	Search by name	
Tour planning	New tour	
	Stored tours	
Store position		
Route options	Route:	Eco
		Fast
		Short

Fiesta (CCN) Vehicles Built From: 12-01-2015 Vehicles Built Up To: 14-10-2015, CG3582en enGBR, Edition date: 12/2014, First Printing

Message		
		Always ask
	Driver:	Leisurely
		Normal
		Fast
	Eco settings	Trailer:
		Roof box
	Dynamic	
	Motorway	
	Tunnel	
	Ferry/motorail	
	Toll	
	Seasonal roads	
	Toll sticker	
Special functions	GPS info	
	System info	
	Enter position	
	Demo mode	

Route Options

Press the **NAV** button and scroll to route options. You can then set your route options for any of the following.

Message		Description and Action
Route:	Always ask	Select to make sure that you are always given the choice of route option for your journey.
Eco		Uses the most fuel efficient route. Your driving style will influence this.
Fast		Uses the fastest route possible.

Fiesta (CCN) Vehicles Built From: 12-01-2015 Vehicles Built Up To: 14-10-2015, CG3582en enGBR, Edition date: 12/2014, First Printing

Message		Description and Action
Short		Uses the shortest distance possible.
Driver:	Leisurely	This option will calculate your time of arrival based on a leisurely drive to the destination.
	Normal	This option will calculate your time of arrival based on a normal drive to the destination.
	Fast	This option will calculate your time of arrival based on a fast drive to the destination.
Eco settings	Trailer:	Use this feature to change the economy settings of your journey relating to whether or not you are towing a trailer and if so the size of trailer being towed.
	Roof box	Use this feature to change the economy settings of your journey relating to the use of a roof box.
	Dynamic	When switched on, and if the unit is receiving a valid traffic message channel signal, the route will be automatically updated to take into account real time traffic incidents or congestion. This feature can be useful in avoiding delays or hold ups on journeys.
	Motorway	When switched off the system will avoid freeways on your route and automatically update your route distance and timings.
	Tunnel	When switched off the system will avoid tunnels on your route and automatically update your route distance and timings.
	Ferry/motorail	When switched off the system will avoid ferry crossings and car train facilities on your route and automatically update your route distance and timings.

Fiesta (CCN) Vehicles Built From: 12-01-2015 Vehicles Built Up To: 14-10-2015, CG3582en enGBR, Edition date: 12/2014, First Printing

Message		Description and Action
	Toll	When switched off the system will avoid toll roads on your route and automatically update your route distance and timings.
	Seasonal roads	When switched off the system will avoid seasonal roads (for example, mountain passes) on your route and automatically update your route distance and timings.
	Toll sticker	When switched off the system will avoid toll routes and automatically update your route distance and timings.

Information

Press the information button to view details of your current location or journey. During active route guidance pressing this button will repeat the last navigation instruction.

Setting Your Navigation Preferences

Select settings for the system to take into account when planning your route.

Press the NAV button and choose any of the following options.

Message	Description and Action
Destination input	Enter your destination details (for example enter city names, enter street names or pick a place from a map).
Traffic	Choose how you want the system to handle traffic problems along your route (for example, block sections on route).
Home address	See the location on the map currently stored as the home position. Only one entry can be saved as the home address.
Last destinations	Access a history of previous destinations entered in the system. Select the required repeat destination from the list.
Favourites	See a list of your saved favorites.
Points of interest	Search for and select points of interest nearby, on your route or at your destination. You can search by name or by category.
Tour planning	Set up and store a new tour by entering a number of different destinations and select the order in which you wish to visit them. You can also modify an existing tour or recall a previous tour. The system will automatically calculate and display your chosen journey.

Fiesta (CCN) Vehicles Built From: 12-01-2015 Vehicles Built Up To: 14-10-2015, CG3582en enGBR, Edition date: 12/2014, First Printing

Message	Description and Action
Store position	Store and name your current position. This will automatically save in your favorites.
Route options	Set your route options from the available list.
Special functions	Select GPS and system information or a demonstration of the system functionality. Select a demonstration mode where the system will simulate a journey whilst the vehicle is stationary. You can manually select a vehicle start position.

Press the MENU button, select the navigation option and choose any of the following options.

Message	Description and Action
Route options	Set your route options.
Map display	Customize the map display for your journey (for example arrows on map, arrival times and map content).
Assistance options	Customize display information for your journey (for example signs, lanes and speed limits). Turn the hazard warning feature on or off.
Personal data	Delete personal data (for example your home address).
Reset all settings	Reset the navigation settings.

Storing Your Home Address

1. Press the **NAV** button.
2. Select the home address option.
3. Enter the required details using the arrow buttons.
4. Press the confirm function button.

Note: *Your last destination will automatically display if you go to change your home address.*

Adding a Favorite

1. Press the **NAV** button.
2. Scroll to the destination input option.
3. Enter the required details using the arrow buttons.
4. Press the store function button.

Note: *If you select store position, this will also save the destination in your favorites.*

Selecting a Favorite

1. Press the **NAV** button.
2. Select the favorites option.
3. Scroll to the required destination using the arrow buttons.
4. Press the **OK** button to start navigation.

Fiesta (CCN) Vehicles Built From: 12-01-2015 Vehicles Built Up To: 14-10-2015, CG3582en enGBR, Edition date: 12/2014, First Printing

Adjusting the Navigation Voice Level

You can adjust the voice prompt level during an active voice prompt by using the volume control.

Note: *During active route guidance pressing the information button will repeat the last navigation instruction.*

Nav Audio Mixing

This feature allows you to adjust the volume mix between the audio unit and navigation voice level.

Tolerant Destination Input

This function will search a number of destinations with a similar spelling to what you have entered. This is helpful if you are unsure on how to spell a destination.

Message	Action
Tolerant	Press the **NAV** button and scroll to this destination input option before entering your destination details.

Then begin to input your destination. Press the **OK** button. The system will search for destinations with similar spellings. Use the arrow buttons to select a destination from the list and press the **OK** button to confirm your destination.

Route Displays

Map Display

Press the **MAP** button to view map mode. This view will show your current location with your vehicle in the center shown as an arrow surrounded by a circle. The arrow will face in the direction of travel.

The information on the top line gives the name of the current road, or the next road to take if a turn is approaching.

You can change the way the map is displayed by altering the zoom and orientation settings. Press function button one. The current map scale is shown on the display.

Map scale settings may be set between 0.05 miles to 500 miles or 50 meters to 500 kilometers, with an auto setting on the top. The auto setting continuously changes the map scale according to vehicle speed and the road type being driven.

You can use the arrow buttons to change the view to 2D, turn-by-turn, 3D or a clean view.

Zoom

This feature will automatically increase the zoom on the map display at times when you are required to make a turn, or perform more complex maneuvers. Shortly after the zoom scale will return to the previous level when in auto mode.

Manual: Press function button one and adjust the setting using the left or right arrow buttons. Press **OK** to confirm your setting.

Auto: Press function button one and using the up or down arrow key select the auto option. Press **OK** to confirm your setting.

Fiesta (CCN) Vehicles Built From: 12-01-2015 Vehicles Built Up To: 14-10-2015, CG3582en enGBR, Edition date: 12/2014, First Printing

Move

When you are in map mode, press function button two. You can now use the arrow buttons on the audio unit to move around the map.

Press function button two again to return to the original view.

Navigation Display

After commencing a navigation route, the default screen is the main navigation screen.

Once an active route is underway, guidance will be given by on-screen information and voice prompts. Whichever audio source you wish to leave the unit in, basic turn by turn and distance information will remain on the screen in the form of a graphic inset. You do not need to leave the unit on the main navigation screen when you are navigating a route. Press the **MAP** button at any time to return to the main navigation screen. Slightly more detailed information on your route may be available using the main navigation screen if required.

Hazard Spot Warning

The system supports a hazard spot warning feature which informs you with visible and audible feedback about hazardous traffic areas.

Message	Description
Assistance options	You can switch the system on and off using the information and entertainment display menu. Refer to this option in the navigation menu.

Note: *This feature is only available in certain countries.*

Navigation Map Updates

Annual navigation map updates are available for purchase. See an authorized dealer.

Type Approvals

SD Logo is a trademark.

The navigation software is based in part on the work of the FreeType team © 2006

The navigation software is based in part on the work of the independent JPEG Group.

Fiesta (CCN) Vehicles Built From: 12-01-2015 Vehicles Built Up To: 14-10-2015, CG3582en enGBR, Edition date: 12/2014, First Printing

ELECTROMAGNETIC COMPATIBILITY

WARNINGS

Your vehicle has been tested and certified to legislations relating to electromagnetic compatibility (72/245/EEC, UN ECE Regulation 10 or other applicable local requirements). It is your responsibility to make sure that any equipment you have fitted complies with applicable local legislations. Have any equipment fitted by an authorized dealer.

WARNINGS

The radio frequency transmitter equipment, for example cellular telephones and amateur radio transmitters, may only be fitted to your vehicle if they keep to the parameters shown in the table below. There are no special provisions or conditions for installations or use.

Do not mount any transceiver, microphones, speakers, or any other item in the deployment path of the airbag system.

Do not fasten antenna cables to original vehicle wiring, fuel pipes and brake pipes.

Keep antenna and power cables at least 3.9 in (10 cm) from any electronic modules and airbags.

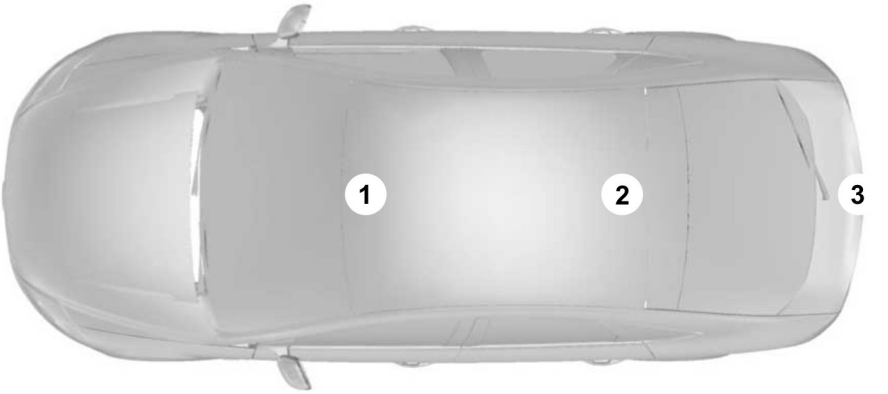

E170906

Fiesta (CCN) Vehicles Built From: 12-01-2015 Vehicles Built Up To: 14-10-2015, CG3582en enGBR, Edition date: 12/2014, First Printing

Frequency Band MHz	Maximum output power Watt (Peak RMS)	Antenna Positions
1-30	50 W	3
30-54	50 W	1, 2
68-87.5	50 W	1, 2
142-176	50 W	1, 2
380-512	50 W	1, 2
806-940	10 W	1, 2
1200-1400	10 W	1, 2
1710-1885	10 W	1, 2
1885-2025	10 W	1, 2

Note: *After the installation of radio frequency transmitters, check for disturbances from and to all electrical equipment in your vehicle, both in the standby and transmit modes.*

Check all electrical equipment:

- With the ignition on.
- With the engine running.
- During a road test at various speeds.

Check that electromagnetic fields generated inside your vehicle cabin by the transmitter installed do not exceed applicable human exposure requirements.

END USER LICENSE AGREEMENT

SYNC® End User License Agreement (EULA)

- You have acquired a device ("DEVICE") that includes software licensed by Ford Motor Company and its affiliates ("FORD MOTOR COMPANY") from an affiliate of Microsoft Corporation ("MS") . Those installed software products of MS origin, as well as associated media, printed materials,

Fiesta (CCN) Vehicles Built From: 12-01-2015 Vehicles Built Up To: 14-10-2015, CG3582en enGBR, Edition date: 12/2014, First Printing

and "online" or electronic documentation ("MS SOFTWARE") are protected by international intellectual property laws and treaties. The MS SOFTWARE is licensed, not sold. All rights reserved.

- The MS SOFTWARE may interface with and/or communicate with, or may be later upgraded to interface with and/or communicate with additional software and/or systems provided by FORD MOTOR COMPANY. The additional software and systems of FORD MOTOR COMPANY origin, as well as associated media, printed materials, and "online" or electronic documentation ("FORD SOFTWARE") are protected by international intellectual property laws and treaties. The FORD SOFTWARE is licensed, not sold. All rights reserved.
- The MS SOFTWARE and/or FORD SOFTWARE may interface with and/or communicate with, or may be later upgraded to interface with and/or communicate with additional software and/or systems provided by third party software and service suppliers. The additional software and services of third party origin, as well as associated media, printed materials, and "online" or electronic documentation ("THIRD PARTY SOFTWARE") are protected by international intellectual property laws and treaties. The THIRD PARTY SOFTWARE is licensed, not sold. All rights reserved.
- The MS SOFTWARE, FORD SOFTWARE and THIRD PARTY SOFTWARE hereinafter collectively and individually will be referred to as "SOFTWARE".

IF YOU DO NOT AGREE TO THIS END USER LICENSE AGREEMENT ("EULA") DO NOT USE THE DEVICE OR COPY THE SOFTWARE. ANY USE OF THE SOFTWARE, INCLUDING BUT NOT LIMITED TO USE ON THE DEVICE, WILL CONSTITUTE YOUR AGREEMENT TO THIS EULA (OR RATIFICATION OF ANY PREVIOUS CONSENT).

GRANT OF SOFTWARE LICENSE: This EULA grants you the following license:

- You may use the SOFTWARE as installed on the DEVICE and as otherwise interfacing with systems and/or services provide by or through FORD MOTOR COMPANY or its third party software and service providers.

Description of Other Rights and Limitations

- **Speech Recognition:** If the SOFTWARE includes speech recognition component(s), you should understand that speech recognition is an inherently statistical process and that recognition errors are inherent in the process. Neither FORD MOTOR COMPANY nor its suppliers shall be liable for any damages arising out of errors in the speech recognition process.
- **Limitations on Reverse Engineering, Decompilation and Disassembly:** You may not reverse engineer, decompile, or disassemble nor permit others to reverse engineer, decompile or disassemble the SOFTWARE, except and only to the extent that such activity is expressly permitted by applicable law notwithstanding this limitation.

Fiesta (CCN) Vehicles Built From: 12-01-2015 Vehicles Built Up To: 14-10-2015, CG3582en enGBR, Edition date: 12/2014, First Printing

- **Limitations on Distributing, Copying, Modifying and Creating Derivative Works:** You may not distribute, copy, make modifications to or create derivative works based on the SOFTWARE, except and only to the extent that such activity is expressly permitted by applicable law notwithstanding this limitation.
- **Single EULA:** The end user documentation for the DEVICE and related systems and services may contain multiple EULAs, such as multiple translations and/or multiple media versions (e.g., in the user documentation and in the software). Even if you receive multiple EULAs, you are licensed to use only one (1) copy of the SOFTWARE.
- **SOFTWARE Transfer:** You may permanently transfer your rights under this EULA only as part of a sale or transfer of the DEVICE, provided you retain no copies, you transfer all of the SOFTWARE (including all component parts, the media and printed materials, any upgrades, and, if applicable, the Certificate(s) of Authenticity), and the recipient agrees to the terms of this EULA. If the SOFTWARE is an upgrade, any transfer must include all prior versions of the SOFTWARE.
- **Termination:** Without prejudice to any other rights, FORD MOTOR COMPANY or MS may terminate this EULA if you fail to comply with the terms and conditions of this EULA.
- **Security Updates/Digital Rights Management:** Content owners use the WMDRM technology included in your DEVICE to protect their intellectual property, included copyrighted content. Portions of the SOFTWARE on your DEVICE use WMDRM software to access WMDRM-protected content. If the WMDRM software fails to protect the content, content owners may ask Microsoft to revoke the SOFTWARE's ability to use WMDRM to play or copy protected content. This action does not affect unprotected content. When your DEVICE downloads licenses for protected content, you agree that Microsoft may include a revocation list with the licenses. Content owners may require you to upgrade the SOFTWARE on your DEVICE to access their content. If you decline an upgrade, you will not be able to access content that requires the upgrade.
- **Consent to Use of Data:** You agree that MS, Microsoft Corporation, FORD MOTOR COMPANY, third party software and systems suppliers, their affiliates and/or their designated agent may collect and use technical information gathered in any manner as part of product support services related to the SOFTWARE or related services. MS, Microsoft Corporation, FORD MOTOR COMPANY, third party software and services suppliers, their affiliates and/or their designated agent may use this information solely to improve their products or to provide customized services or technologies to you. MS, Microsoft Corporation, FORD MOTOR COMPANY, third party software and systems suppliers, their affiliates and/or their designated agent may disclose this information to others, but not in a form that personally identifies you.

Fiesta (CCN) Vehicles Built From: 12-01-2015 Vehicles Built Up To: 14-10-2015, CG3582en enGBR, Edition date: 12/2014, First Printing

- **Internet-Based Services Components:** The SOFTWARE may contain components that enable and facilitate the use of certain Internet-based services. You acknowledge and agree that MS, Microsoft Corporation, FORD MOTOR COMPANY, third party software and service suppliers, their affiliates and/or their designated agent may automatically check the version of the SOFTWARE and/or its components that you are utilizing and may provide upgrades or supplements to the SOFTWARE that may be automatically downloaded to your DEVICE.
- **Additional Software/Services:** The SOFTWARE may permit FORD MOTOR COMPANY, third party software and service suppliers, MS, Microsoft Corporation, their affiliates and/or their designated agent to provide or make available to you SOFTWARE updates, supplements, add-on components, or Internet-based services components of the SOFTWARE after the date you obtain your initial copy of the SOFTWARE ("Supplemental Components").

If FORD MOTOR COMPANY or third party software and services suppliers provide or make available to you Supplemental Components and no other EULA terms are provided along with the Supplemental Components, then the terms of this EULA shall apply.

If MS, Microsoft Corporation, their affiliates and/or their designated agent make available Supplemental Components, and no other EULA terms are provided, then the terms of this EULA shall apply, except that the MS, Microsoft Corporation or affiliate entity providing the Supplemental Component(s) shall be the licensor of the Supplemental Component(s).

FORD MOTOR COMPANY, MS, Microsoft Corporation, their affiliates and/or their designated agent reserve the right to discontinue without liability any Internet-based services provided to you or made available to you through the use of the SOFTWARE.

- **Links to Third Party Sites:** The MS SOFTWARE may provide you with the ability to link to third party sites through the use of the SOFTWARE. The third party sites are not under the control of MS, Microsoft Corporation, their affiliates and/or their designated agent. Neither MS nor Microsoft Corporation nor their affiliates nor their designated agent are responsible for (i) the contents of any third party sites, any links contained in third party sites, or any changes or updates to third party sites, or (ii) webcasting or any other form of transmission received from any third party sites. If the SOFTWARE provides links to third party sites, those links are provided to you only as a convenience, and the inclusion of any link does not imply an endorsement of the third party site by MS, Microsoft Corporation, their affiliates and/or their designated agent.
- **Obligation to Drive Responsibly:** You recognize your obligation to drive responsibly and keep attention on the road. You will read and abide with the DEVICE operating instructions particularly as they pertain to safety and assumes any risk associated with the use of the DEVICE.

UPGRADES AND RECOVERY MEDIA: If the SOFTWARE is provided by FORD MOTOR COMPANY separate from the DEVICE on media such as a ROM chip, CD ROM disk(s) or via web download or other means, and is labeled "For Upgrade Purposes Only" or "For Recovery Purposes Only" you may install one (1) copy of such

Fiesta (CCN) Vehicles Built From: 12-01-2015 Vehicles Built Up To: 14-10-2015, CG3582en enGBR, Edition date: 12/2014, First Printing

SOFTWARE onto the DEVICE as a replacement copy for the existing SOFTWARE, and use it in accordance with this EULA, including any additional EULA terms accompanying the upgrade SOFTWARE.

INTELLECTUAL PROPERTY RIGHTS: All title and intellectual property rights in and to the SOFTWARE (including but not limited to any images, photographs, animations, video, audio, music, text and "applets" incorporated into the SOFTWARE), the accompanying printed materials, and any copies of the SOFTWARE, are owned by MS, Microsoft Corporation, FORD MOTOR COMPANY, or their affiliates or suppliers. The SOFTWARE is licensed, not sold. You may not copy the printed materials accompanying the SOFTWARE. All title and intellectual property rights in and to the content which may be accessed through use of the SOFTWARE is the property of the respective content owner and may be protected by applicable copyright or other intellectual property laws and treaties. This EULA grants you no rights to use such content. All rights not specifically granted under this EULA are reserved by MS, Microsoft Corporation, FORD MOTOR COMPANY, third party software and service providers, their affiliates and suppliers. Use of any on-line services which may be accessed through the SOFTWARE may be governed by the respective terms of use relating to such services. If this SOFTWARE contains documentation that is provided only in electronic form, you may print one copy of such electronic documentation.

EXPORT RESTRICTIONS: You acknowledge that the SOFTWARE is subject to U.S. and European Union export jurisdiction. You agree to comply with all applicable international and national laws that apply to the SOFTWARE, including the U.S. Export Administration Regulations, as well as end-user, end-use and destination restrictions issued by U.S. and other governments. For additional information, see http://www.microsoft.com/exporting/.

TRADEMARKS: This EULA does not grant you any rights in connection with any trademarks or service marks of FORD MOTOR COMPANY, MS, Microsoft Corporation, third party software or service providers, their affiliates or suppliers.

PRODUCT SUPPORT: Product support for the SOFTWARE is not provided by MS, its parent corporation Microsoft Corporation, or their affiliates or subsidiaries. For product support, please refer to FORD MOTOR COMPANY instructions provided in the documentation for the DEVICE. Should you have any questions concerning this EULA, or if you desire to contact FORD MOTOR COMPANY for any other reason, please refer to the address provided in the documentation for the DEVICE.

No Liability for Certain Damages: EXCEPT AS PROHIBITED BY LAW, FORD MOTOR COMPANY, ANY THIRD PARTY SOFTWARE OR SERVICES SUPPLIERS, MS, MICROSOFT CORPORATION AND THEIR AFFILIATES SHALL HAVE NO LIABILITY FOR ANY INDIRECT, SPECIAL, CONSEQUENTIAL OR INCIDENTAL DAMAGES ARISING FROM OR IN CONNECTION WITH THE USE OR PERFORMANCE OF THE SOFTWARE. THIS LIMITATION SHALL APPLY EVEN IF ANY REMEDY FAILS OF ITS ESSENTIAL PURPOSE. IN NO EVENT SHALL MS, MICROSOFT CORPORATION AND/OR THEIR AFFILIATES BE LIABLE FOR ANY AMOUNT IN EXCESS OF U.S. TWO HUNDRED FIFTY DOLLARS (U.S. $250.00).

Fiesta (CCN) Vehicles Built From: 12-01-2015 Vehicles Built Up To: 14-10-2015, CG3582en enGBR, Edition date: 12/2014, First Printing

- THERE ARE NO WARRANTIES OTHER THAN THOSE THAT MAY EXPRESSLY BE PROVIDED FOR YOUR NEW VEHICLE.

Adobe

Contains Adobe® [Flash® Player] or [AIR®] technology by Adobe Systems Incorporated. This [Licensee Product] contains [Adobe® Flash® Player] [Adobe® AIR®] software under license from Adobe Systems Incorporated, Copyright ©1995-2009 Adobe Macromedia Software LLC. All rights reserved. Adobe, Flash and AIR are trademarks of Adobe Systems Incorporated.

End User Notice

Microsoft® Windows® Mobile for Automotive Important Safety Information

This system Ford SYNC™ contains software that is licensed to Manufacturer FORD MOTOR COMPANY by an affiliate of Microsoft Corporation pursuant to a license agreement. Any removal, reproduction, reverse engineering or other unauthorized use of the software from this system in violation of the license agreement is strictly prohibited and may subject you to legal action.

Read and follow instructions: Before using your Windows Automotive- based system, read and follow all instructions and safety information provided in this end user manual ("User's Guide"). Not following precautions found in this User's Guide can lead to an accident or other serious consequences.

Keep User's Guide in vehicle: When kept in the vehicle, the User's Guide will be a ready reference for you and other users unfamiliar with the Windows Automotive-based system. Please make certain that before using the system for the first time, all persons have access to the User's Guide and read its instructions and safety information carefully.

WARNING

Operating certain parts of this system while driving can distract your attention away from the road, and possibly cause an accident or other serious consequences. Do not change system settings or enter data non-verbally (using your hands) while driving. Stop the vehicle in a safe and legal manner before attempting these operations. This is important since while setting up or changing some functions you might be required to distract your attention away from the road and remove your hands from the wheel.

General Operation

Voice Command Control: Functions within the Windows Automotive-based system may be accomplished using only voice commands. Using voice commands while driving allows you to operate the system without removing your hands from the wheel.

Prolonged Views of Screen: Do not access any function requiring a prolonged view of the screen while you are driving. Pull over in a safe and legal manner before attempting to access a function of the system requiring prolonged attention. Even occasional short scans to the screen may be hazardous if your attention has been diverted away from your driving task at a critical time.

Fiesta (CCN) Vehicles Built From: 12-01-2015 Vehicles Built Up To: 14-10-2015, CG3582en enGBR, Edition date: 12/2014, First Printing

Volume Setting: Do not raise the volume excessively. Keep the volume at a level where you can still hear outside traffic and emergency signals while driving. Driving while unable to hear these sounds could cause an accident.

Use of Speech Recognition Functions: Speech recognition software is inherently a statistical process which is subject to errors. It is your responsibility to monitor any speech recognition functions included in the system and address any errors.

Navigation Features: Any navigation features included in the system are intended to provide turn by turn instructions to get you to a desired destination. Please make certain all persons using this system carefully read and follow instructions and safety information fully.

Distraction Hazard: Any navigation features may require manual (non-verbal) setup. Attempting to perform such set-up or insert data while driving can seriously distract your attention and could cause an accident or other serious consequences. Stop the vehicle in a safe and legal manner before attempting these operations.

Let Your Judgment Prevail: Any navigation features are provided only as an aid. Make your driving decisions based on your observations of local conditions and existing traffic regulations. Any such feature is not a substitute for your personal judgment. Any route suggestions made by this system should never replace any local traffic regulations or your personal judgment or knowledge of safe driving practices.

Route Safety: Do not follow the route suggestions if doing so would result in an unsafe or illegal maneuver, if you would be placed in an unsafe situation, or if you would be directed into an area that you consider unsafe. The driver is ultimately responsible for the safe operation of the vehicle and therefore, must evaluate whether it is safe to follow the suggested directions.

Potential Map Inaccuracy: Maps used by this system may be inaccurate because of changes in roads, traffic controls or driving conditions. Always use good judgment and common sense when following the suggested routes.

Emergency Services: Do not rely on any navigation features included in the system to route you to emergency services. Ask local authorities or an emergency services operator for these locations. Not all emergency services such as police, fire stations, hospitals and clinics are likely to be contained in the map database for such navigation features.

TeleNav Software End User License Agreement

Please read these terms and conditions carefully before you use the TeleNav Software. Your use of the TeleNav Software indicates that you accept these terms and conditions. If you do not accept these terms and conditions, do not break the seal of the package, launch, or otherwise use the TeleNav Software.

TeleNav may revise this Agreement and the privacy policy at any time, with or without notice to you. You agree to visit http://www.telenav.com from time to time to review the then current version of this Agreement and of the privacy policy.

Fiesta (CCN) Vehicles Built From: 12-01-2015 Vehicles Built Up To: 14-10-2015, CG3582en enGBR, Edition date: 12/2014, First Printing

1. Safe and Lawful Use

You acknowledge that devoting attention to the TeleNav Software may pose a risk of injury or death to you and others in situations that otherwise require your undivided attention, and you therefore agree to comply with the following when using the TeleNav Software: (a) observe all traffic laws and otherwise drive safely; (b) use your own personal judgment while driving. If you feel that a route suggested by the TeleNav Software instructs you to perform an unsafe or illegal maneuver, places you in an unsafe situation, or directs you into an area that you consider to be unsafe, do not follow such instructions; (c) do not input destinations, or otherwise manipulate the TeleNav Software, unless your vehicle is stationary and parked; (d) do not use the TeleNav Software for any illegal, unauthorized, unintended, unsafe, hazardous, or unlawful purposes, or in any manner inconsistent with this Agreement; (e) arrange all GPS and wireless devices and cables necessary for use of the TeleNav Software in a secure manner in your vehicle so that they will not interfere with your driving and will not prevent the operation of any safety device (such as an airbag).

You agree to indemnify and hold TeleNav harmless against all claims resulting from any dangerous or otherwise inappropriate use of the TeleNav Software in any moving vehicle, including as a result of your failure to comply with the directions above.

2. Account Information

You agree: (a) when registering the TeleNav Software, to provide TeleNav with true, accurate, current, and complete information about yourself, and (b) to inform TeleNav promptly of any changes to such information, and to keep it true, accurate, current and complete.

3. Software License

Subject to your compliance with the terms of this Agreement, TeleNav hereby grants to you a personal, non-exclusive, non-transferable license (except as expressly permitted below in connection with your permanent transfer of the TeleNav Software license), without the right to sublicense, to use the TeleNav Software (in object code form only) in order to access and use the TeleNav Software. This license shall terminate upon any termination or expiration of this Agreement. You agree that you will use the TeleNav Software only for your personal business or leisure purposes, and not to provide commercial navigation services to other parties.

3.1 License Limitations

You agree not to do any of the following: (a) reverse engineer, decompile, disassemble, translate, modify, alter or otherwise change the TeleNav Software or any part thereof; (b) attempt to derive the source code, audio library or structure of the TeleNav Software without the prior express written consent of TeleNav; (c) remove from the TeleNav Software, or alter, any of TeleNav's or its suppliers' trademarks, trade names, logos, patent or copyright notices, or other notices or markings; (d) distribute, sublicense or otherwise transfer the TeleNav Software to others, except as part of your permanent transfer of the TeleNav Software; or (e) use the TeleNav Software in any manner that (i) infringes the intellectual property or proprietary rights, rights of publicity or privacy or other rights of any party, (ii) violates any law, statute, ordinance or regulation, including but not limited to laws and regulations related to spamming, privacy, consumer and child protection, obscenity or defamation, or (iii) is harmful, threatening, abusive, harassing, tortuous,

Fiesta (CCN) Vehicles Built From: 12-01-2015 Vehicles Built Up To: 14-10-2015, CG3582en enGBR, Edition date: 12/2014, First Printing

defamatory, vulgar, obscene, libelous, or otherwise objectionable; and (f) lease, rent out, or otherwise permit unauthorized access by third parties to the TeleNav Software without advanced written permission of TeleNav.

4. Disclaimers

To the fullest extent permissible pursuant to applicable law, in no event will TeleNav, its licensors and suppliers, or agents or employees of any of the foregoing, be liable for any decision made or action taken by you or anyone else in reliance on the information provided by the TeleNav Software. TeleNav also does not warrant the accuracy of the map or other data used for the TeleNav Software. Such data may not always reflect reality due to, among other things, road closures, construction, weather, new roads and other changing conditions. You are responsible for the entire risk arising out of your use of the TeleNav Software. For example but without limitation, you agree not to rely on the TeleNav Software for critical navigation in areas where the well-being or survival of you or others is dependent on the accuracy of navigation, as the maps or functionality of the TeleNav Software are not intended to support such high risk applications, especially in more remote geographical areas.

TELENAV EXPRESSLY DISCLAIMS AND EXCLUDES ALL WARRANTIES IN CONNECTION WITH THE TELENAV SOFTWARE, WHETHER STATUTORY, EXPRESS OR IMPLIED, INCLUDING ALL WARRANTIES WHICH MAY ARISE FROM COURSE OF DEALING, CUSTOM OR TRADE AND INCLUDING, BUT NOT LIMITED TO, THE IMPLIED WARRANTIES OF MERCHANTABILITY, FITNESS FOR A PARTICULAR PURPOSE AND NON-INFRINGEMENT OF THIRD PARTY RIGHTS WITH RESPECT TO THE TELENAV SOFTWARE. Certain jurisdictions do not permit the disclaimer of certain warranties, so this limitation may not apply to you.

5. Limitation of Liability

TO THE EXTENT PERMITTED UNDER APPLICABLE LAW, UNDER NO CIRCUMSTANCES SHALL TELENAV OR ITS LICENSORS AND SUPPLIERS BE LIABLE TO YOU OR TO ANY THIRD PARTY FOR ANY INDIRECT, INCIDENTAL, CONSEQUENTIAL, SPECIAL OR EXEMPLARY DAMAGES (INCLUDING IN EACH CASE, BUT NOT LIMITED TO, DAMAGES FOR THE INABILITY TO USE THE EQUIPMENT OR ACCESS DATA, LOSS OF DATA, LOSS OF BUSINESS, LOSS OF PROFITS, BUSINESS INTERRUPTION OR THE LIKE) ARISING OUT OF THE USE OF OR INABILITY TO USE THE TELENAV SOFTWARE, EVEN IF TELENAV HAS BEEN ADVISED OF THE POSSIBILITY OF SUCH DAMAGES.

NOTWITHSTANDING ANY DAMAGES THAT YOU MIGHT INCUR FOR ANY REASON WHATSOEVER (INCLUDING, WITHOUT LIMITATION, ALL DAMAGES REFERENCED HEREIN AND ALL DIRECT OR GENERAL DAMAGES IN CONTRACT, TORT (INCLUDING NEGLIGENCE) OR OTHERWISE), THE ENTIRE LIABILITY OF TELENAV AND OF ALL OF TELENAV'S SUPPLIERS SHALL BE LIMITED TO THE AMOUNT ACTUALLY PAID BY YOU FOR THE TELENAV SOFTWARE. SOME STATES AND/OR JURISDICTIONS DO NOT ALLOW THE EXCLUSION OR LIMITATION OF INCIDENTAL OR CONSEQUENTIAL DAMAGES, SO THE ABOVE LIMITATIONS OR EXCLUSIONS MAY NOT APPLY TO YOU.

Fiesta (CCN) Vehicles Built From: 12-01-2015 Vehicles Built Up To: 14-10-2015, CG3582en enGBR, Edition date: 12/2014, First Printing

6. Arbitration and Governing Law

You agree that any dispute, claim or controversy arising out of or relating to this Agreement or the TeleNav Software shall be settled by independent arbitration involving a neutral arbitrator and administered by the American Arbitration Association in the County of Santa Clara, California. The arbitrator shall apply the Commercial Arbitration Rules of the American Arbitration Association, and the judgment upon the award rendered by the arbitrator may be entered by any court having jurisdiction. Note that there is no judge or jury in an arbitration proceeding and the decision of the arbitrator shall be binding upon both parties. You expressly agree to waive your right to a jury trial.

This Agreement and performance hereunder will be governed by and construed in accordance with the laws of the State of California, without giving effect to its conflict of laws provisions. To the extent judicial action is necessary in connection with the binding arbitration, both TeleNav and you agree to submit to the exclusive jurisdiction of the courts of the County of Santa Clara, California. The United Nations Convention on Contracts for the International Sale of Goods shall not apply.

7. Assignment

You may not resell, assign, or transfer this Agreement or any of your rights or obligations, except in totality, in connection with your permanent transfer of the TeleNav Software, and expressly conditioned upon the new user of the TeleNav Software agreeing to be bound by the terms and conditions of this Agreement. Any such sale, assignment or transfer that is not expressly permitted under this paragraph will result in immediate termination of this Agreement, without liability to TeleNav, in which case you and all other parties shall immediately cease all use of the TeleNav Software. Notwithstanding the foregoing, TeleNav may assign this Agreement to any other party at any time without notice, provided the assignee remains bound by this Agreement.

8. Miscellaneous

8.1

This Agreement constitutes the entire agreement between TeleNav and you with respect to the subject matter hereof.

8.2

Except for the limited licenses expressly granted in this Agreement, TeleNav retains all right, title and interest in and to the TeleNav Software, including without limitation all related intellectual property rights. No licenses or other rights which are not expressly granted in this Agreement are intended to, or shall be, granted or conferred by implication, statute, inducement, estoppel or otherwise, and TeleNav and its suppliers and licensors hereby reserve all of their respective rights other than the licenses explicitly granted in this Agreement

8.3

By using the TeleNav Software, you consent to receive from TeleNav all communications, including notices, agreements, legally required disclosures or other information in connection with the TeleNav Software (collectively, "Notices") electronically. TeleNav may provide such Notices by posting them on TeleNav's Website or by downloading such Notices to your wireless device. If you desire to withdraw your consent to receive Notices electronically, you must discontinue your use of the TeleNav Software.

Fiesta (CCN) Vehicles Built From: 12-01-2015 Vehicles Built Up To: 14-10-2015, CG3582en enGBR, Edition date: 12/2014, First Printing

8.4

TeleNav's or your failure to require performance of any provision shall not affect that party's right to require performance at any time thereafter, nor shall a waiver of any breach or default of this Agreement constitute a waiver of any subsequent breach or default or a waiver of the provision itself.

8.5

If any provision herein is held unenforceable, then such provision will be modified to reflect the intention of the parties, and the remaining provisions of this Agreement will remain in full force and effect

8.6

The headings in this Agreement are for convenience of reference only, will not be deemed to be a part of this Agreement, and will not be referred to in connection with the construction or interpretation of this Agreement. As used in this Agreement, the words "include" and "including" and variations thereof, will not be deemed to be terms of limitation, but rather will be deemed to be followed by the words "without limitation".

9. Other Vendors Terms and Conditions

The TeleNav Software utilizes map and other data licensed to TeleNav by third party vendors for the benefit of you and other end users. This Agreement includes end-user terms applicable to these companies (included at the end of this Agreement), and thus your use of the TeleNav Software is also subject to such terms. You agree to comply with the following additional terms and conditions, which are applicable to TeleNav's third party vendor licensors:

NavTeq End User License Agreement

END USER TERMS

The content provided ("Data") is licensed, not sold. By opening this package, or installing, copying, or otherwise using the Data, you agree to be bound by the terms of this agreement. If you do not agree to the terms of this agreement, you are not permitted to install, copy, use, resell or transfer the Data. If you wish to reject the terms of this agreement, and have not installed, copied, or used the Data, you must contact your retailer or NAVTEQ North America, LLC ("NT") within thirty (30) days of purchase for a refund of your purchase price. To contact NT, please visit www.navteq.com.

The Data is provided for your personal, internal use only and may not be resold. It is protected by copyright, and is subject to the following terms (this "End User License Agreement") and conditions which are agreed to by you, on the one hand, and NAVTEQ North America, LLC ("NT") and its licensors (including their licensors and suppliers) on the other hand.

The Data for areas of Canada includes information taken with permission from Canadian authorities, including: © Her Majesty the Queen in Right of Canada, © Queen's Printer for Ontario, © Canada Post Corporation, GeoBase®.

NT holds a nonexclusive license from the United States Postal Service ® to publish and sell ZIP+4 ® information.

© United States Postal Service ® 2009. Prices are not established, controlled or approved by the United States Postal Service ® The following trademarks and registrations are owned by the USPS: United States Postal Service, USPS, and ZIP+4.

The Data for Mexico includes certain Data from Instituto Nacional de Estadística y Geografía.

Fiesta (CCN) Vehicles Built From: 12-01-2015 Vehicles Built Up To: 14-10-2015, CG3582en enGBR, Edition date: 12/2014, First Printing

TERMS AND CONDITIONS

License Limitations on Use: You agree that your license to use this Data is limited to and conditioned on use for solely personal, noncommercial purposes, and not for service bureau, timesharing or other similar purposes. Except as otherwise set forth herein, you agree not to otherwise reproduce, copy, modify, decompile, disassemble or reverse engineer any portion of this Data, and may not transfer or distribute it in any form, for any purpose, except to the extent permitted by mandatory laws.

License Limitations on Transfer: Your limited license does not allow transfer or resale of the Data, except on the condition that you may transfer the Data and all accompanying materials on a permanent basis if: (a) you retain no copies of the Data; (b) the recipient agrees to the terms of this End User License Agreement; and (c) you transfer the Data in the exact same form as you purchased it by physically transferring the original media (e.g., the CD-ROM or DVD you purchased), all original packaging, all Manuals and other documentation. Specifically, Multi-disc sets may only be transferred or sold as a complete set as provided to you and not as a subset thereof.

Additional License Limitations: Except where you have been specifically licensed to do so by NT in a separate written agreement, and without limiting the preceding paragraph, your license is conditioned on use of the Data as prescribed in this agreement, and you may not (a) use this Data with any products, systems, or applications installed or otherwise connected to or in communication with vehicles capable of vehicle navigation, positioning, dispatch, real time route guidance, fleet management or similar applications; or (b) with, or in communication with, including without limitation, cellular phones, palmtop and handheld computers, pagers, and personal digital assistants or PDAs.

WARNING

This Data may contain inaccurate or incomplete information due to the passage of time, changing circumstances, sources used and the nature of collecting comprehensive geographic Data, any of which may lead to incorrect results.

No Warranty: This Data is provided to you "as is" , and you agree to use it at your own risk. NT and its licensors (and their licensors and suppliers) make no guarantees, representations or warranties of any kind, express or implied, arising by law or otherwise, including but not limited to, content, quality, accuracy, completeness, effectiveness, reliability, fitness for a particular purpose, usefulness, use or results to be obtained from this Data, or that the Data or server will be uninterrupted or error free.

Disclaimer of Warranty: NT AND ITS LICENSORS (INCLUDING THEIR LICENSORS AND SUPPLIERS) DISCLAIM ANY WARRANTIES, EXPRESS OR IMPLIED, OF QUALITY, PERFORMANCE, MERCHANTABILITY, FITNESS FOR A PARTICULAR PURPOSE OR NON-INFRINGEMENT. Some States, Territories and Countries do not allow certain warranty exclusions, so to that extent the above exclusion may not apply to you.

Disclaimer of Liability: NT AND ITS LICENSORS (INCLUDING THEIR LICENSORS AND SUPPLIERS) SHALL NOT BE LIABLE TO YOU IN RESPECT OF ANY CLAIM, DEMAND OR ACTION, IRRESPECTIVE OF THE NATURE OF THE

Fiesta (CCN) Vehicles Built From: 12-01-2015 Vehicles Built Up To: 14-10-2015, CG3582en enGBR, Edition date: 12/2014, First Printing

CAUSE OF THE CLAIM, DEMAND OR ACTION ALLEGING ANY LOSS, INJURY OR DAMAGES, DIRECT OR INDIRECT, WHICH MAY RESULT FROM THE USE OR POSSESSION OF THIS DATA; OR FOR ANY LOSS OF PROFIT, REVENUE, CONTRACTS OR SAVINGS, OR ANY OTHER DIRECT, INDIRECT, INCIDENTAL, SPECIAL OR CONSEQUENTIAL DAMAGES ARISING OUT OF YOUR USE OF OR INABILITY TO USE THIS DATA, ANY DEFECT IN THIS DATA, OR THE BREACH OF THESE TERMS OR CONDITIONS, WHETHER IN AN ACTION IN CONTRACT OR TORT OR BASED ON A WARRANTY, EVEN IF NT OR ITS LICENSORS HAVE BEEN ADVISED OF THE POSSIBILITY OF SUCH DAMAGES. Some States, Territories and Countries do not allow certain liability exclusions or damages limitations, so to that extent the above may not apply to you.

Export Control: You agree not to export from anywhere any part of the Data or any direct product thereof except in compliance with, and with all licenses and approvals required under, applicable export laws, rules and regulations, including but not limited to the laws, rules and regulations administered by the Office of Foreign Assets Control of the U.S. Department of Commerce and the Bureau of Industry and Security of the U.S. Department of Commerce. To the extent that any such export laws, rules or regulations prohibit NT from complying with any of its obligations hereunder to deliver or distribute Data, such failure shall be excused and shall not constitute a breach of this Agreement.

Entire Agreement: These terms and conditions constitute the entire agreement between NT (and its licensors, including their licensors and suppliers) and you pertaining to the subject matter hereof, and supersedes in their entirety any and all written or oral agreements previously existing between us with respect to such subject matter.

Severability: You and NT agree that if any portion of this agreement is found illegal or unenforceable, that portion shall be severed and the remainder of the Agreement shall be given full force and effect.

Governing Law: The above terms and conditions shall be governed by the laws of the State of Illinois, without giving effect to (i) its conflict of laws provisions, or (ii) the United Nations Convention for Contracts for the International Sale of Goods, which is explicitly excluded. You agree to submit to the personal jurisdiction of the State of Illinois for any and all disputes, claims and actions arising from or in connection with the Data provided to you hereunder.

Government End Users: If the Data is being acquired by or on behalf of the United States government or any other entity seeking or applying rights similar to those customarily claimed by the United States government, this Data is a "commercial term" as that term is defined at 48 C.F.R. ("FAR") 2.101, is licensed in accordance with this End User License Agreement, and each copy of Data delivered or otherwise furnished shall be marked and embedded as appropriate with the following "Notice of Use", and be treated in accordance with such Notice:

NOTICE OF USE

CONTRACTOR (MANUFACTURER/SUPPLIER)

NAME:

Fiesta (CCN) Vehicles Built From: 12-01-2015 Vehicles Built Up To: 14-10-2015, CG3582en enGBR, Edition date: 12/2014, First Printing

NAVTEQ

CONTRACTOR
(MANUFACTURER/SUPPLIER)

ADDRESS:

425 West Randolph Street, Chicago, IL 60606.

This Data is a commercial item as defined in FAR 2.101

and is subject to the End User License Agreement under

which this Data was provided.

© 2011 NAVTEQ. All rights reserved.

If the Contracting Officer, federal government agency, or any federal official refuses to use the legend provided herein, the Contracting Officer, federal government agency, or any federal official must notify NAVTEQ prior to seeking additional or alternative rights in the Data.

Wi-Fi hotspot data provided by JiWire, © 2013 JiWire.

Gracenote® Copyright

CD and music-related data from Gracenote, Inc., copyright© 2000-2007 Gracenote. Gracenote Software, copyright © 2000-2007 Gracenote. This product and service may practice one or more of the following U.S. Patents #5,987,525, #6,061,680, #6,154,773, #6,161,132, #6,230,192, #6,230,207, #6.240,459, #6,330,593 and other patents issued or pending. Some services supplied under license from Open Globe, Inc. for U.S. Patent: #6,304,523.

Gracenote and CDDB are registered trademarks of Gracenote. The Gracenote logo and logotype, and the "Powered by Gracenote™" logo are trademarks of Gracenote.

Gracenote® End User License Agreement (EULA)

This device contains software from Gracenote, Inc. of 2000 Powell Street Emeryville, California 94608 ("Gracenote").

The software from Gracenote (the "Gracenote Software") enables this device to do disc and music file identification and obtain music-related information, including name, artist, track, and title information ("Gracenote Data") from online servers ("Gracenote Servers"), and to perform other functions. You may use Gracenote Data only by means of the intended End User functions of this device.

This device may contain content belonging to Gracenote's providers. If so, all of the restrictions set forth herein with respect to Gracenote Data shall also apply to such content and such content providers shall be entitled to all of the benefits and protections set forth herein that are available to Gracenote.

You agree that you will use the content from Gracenote ("Gracenote Content") , Gracenote Data, the Gracenote Software, and Gracenote Servers for your own personal, non-commercial use only. You agree not to assign, copy, transfer or transmit the Gracenote Content, Gracenote Software or any Gracenote Data (except in a Tag associated with a music file) to any third party. YOU AGREE NOT TO USE OR EXPLOIT GRACENOTE CONTENT, GRACENOTE DATA, THE GRACENOTE SOFTWARE, OR GRACENOTE SERVERS, EXCEPT AS EXPRESSLY PERMITTED HEREIN.

You agree that your non-exclusive licenses to use the Gracenote Content, Gracenote Data, the Gracenote Software, and Gracenote Servers will terminate if you violate these restrictions. If your licenses terminate, you agree to cease any and all use of the Gracenote Content, Gracenote

Fiesta (CCN) Vehicles Built From: 12-01-2015 Vehicles Built Up To: 14-10-2015, CG3582en enGBR, Edition date: 12/2014, First Printing

Data, the Gracenote Software, and Gracenote Servers. Gracenote, respectively, reserve all rights in Gracenote Data, the Gracenote Software, and the Gracenote Servers and Gracenote Content, including all ownership rights. Under no circumstances will either Gracenote become liable for any payment to you for any information that you provide, including any copyrighted material or music file information. You agree that Gracenote may enforce its respective rights, collectively or separately, under this agreement against you, directly in each company's own name.

Gracenote uses a unique identifier to track queries for statistical purposes. The purpose of a randomly assigned numeric identifier is to allow Gracenote to count queries without knowing anything about who you are. For more information, see the web page at www.gracenote.com for the Gracenote Privacy Policy.

THE GRACENOTE SOFTWARE, EACH ITEM OF GRACENOTE DATA AND THE GRACENOTE CONTENT ARE LICENSED TO YOU "AS IS". NEITHER GRACENOTE MAKES ANY REPRESENTATIONS OR WARRANTIES, EXPRESS OR IMPLIED, REGARDING THE ACCURACY OF ANY GRACENOTE DATA FROM THE GRACENOTE SERVERS OR GRACENOTE CONTENT. GRACENOTE COLLECTIVELY AND SEPARATELY RESERVE THE RIGHT TO DELETE DATA AND/OR CONTENT FROM THE COMPANIES' RESPECTIVE SERVERS OR, IN THE CASE OF GRACENOTE, CHANGE DATA CATEGORIES FOR ANY CAUSE THAT GRACENOTE DEEMS SUFFICIENT. NO WARRANTY IS MADE THAT EITHER GRACENOTE CONTENT OR THE GRACENOTE SOFTWARE OR GRACENOTE SERVERS ARE ERROR-FREE OR THAT THE FUNCTIONING OF THE GRACENOTE SOFTWARE OR GRACENOTE SERVERS WILL BE UNINTERRUPTED. GRACENOTE IS NOT OBLIGATED TO PROVIDE YOU WITH ANY ENHANCED OR ADDITIONAL DATA TYPES THAT GRACENOTE MAY CHOOSE TO PROVIDE IN THE FUTURE AND IS FREE TO DISCONTINUE ITS ONLINE SERVICES AT ANY TIME. GRACENOTE DISCLAIM ALL WARRANTIES EXPRESS OR IMPLIED, INCLUDING, BUT NOT LIMITED TO, IMPLIED WARRANTIES OF MERCHANTABILITY, FITNESS FOR A PARTICULAR PURPOSE, TITLE, AND NON-INFRINGEMENT. NEITHER GRACENOTE WARRANTS THE RESULTS THAT WILL BE OBTAINED BY YOUR USE OF THE GRACENOTE SOFTWARE OR ANY GRACENOTE SERVER. IN NO CASE WILL GRACENOTE BE LIABLE FOR ANY CONSEQUENTIAL OR INCIDENTAL DAMAGES OR FOR ANY LOST PROFITS OR LOST REVENUES FOR ANY REASON WHATSOEVER.

© Gracenote 2007.

FCC ID: KMHSYNCG2

IC: 1422A-SYNCG2

This device complies with Part 15 of the FCC Rules and with RSS-210 of Industry Canada. Operation is subject to the following two conditions: (1) This device may not cause harmful interference, and (2) this device must accept any interference received, including interference that may cause undesired operation.

WARNING

Changes or modifications not expressively approved by the party responsible for compliance could void the user's authority to operate the equipment. The term "IC" before the radio certification number only signifies that Industry Canada technical specifications were met.

Fiesta (CCN) Vehicles Built From: 12-01-2015 Vehicles Built Up To: 14-10-2015, CG3582en enGBR, Edition date: 12/2014, First Printing

The antenna used for this transmitter must not be co-located or operating in conjunction with any other antenna or transmitter.

Fiesta (CCN) Vehicles Built From: 12-01-2015 Vehicles Built Up To: 14-10-2015, CG3582en enGBR, Edition date: 12/2014, First Printing

A

A/C
See: Climate Control....81
About This Manual....5
ABS
See: Brakes....115
ABS driving hints
See: Hints on Driving With Anti-Lock Brakes....115
Accessories
See: Replacement Parts Recommendation....8
Active City Stop....126
General Information....126
Laser Sensor Information....127
Using Active City Stop....126
Adjusting the Steering Wheel....43
Air Conditioning
See: Climate Control....81
Air Vents....81
Center Air Vents....81
Side Air Vent....81
Alarm
See: Anti-Theft Alarm....40
Anti-Theft Alarm....40
Alarm System....40
Arming the Alarm....41
Disarming the Alarm....42
Full and Reduced Guard....41
Triggering the Alarm....41
Appendices....286
At a Glance....9
Front Exterior Overview....9
Instrument Panel Overview....11
Rear Exterior Overview....14
Vehicle Interior Overview....10
Audible Warnings and Indicators....64
Automatic Transmission....64
Headlamps On....64
Key Outside Car....64
Low Fuel....64
Safety Belt Minder....64
Audio Control....43
Audio Input Jack....235
Audio System....203
General Information....203
Audio Troubleshooting....236
Audio Unit - Vehicles With: AM/FM/CD/Bluetooth/Navigation System....215
Alternative Frequencies....220
Automatic Volume Control....219
Autostore Control....219
News Broadcasts....220
Radio Button....218
Regional Mode....220
Station Preset Buttons....218
Station Tuning Control....218
Traffic Information Control....219
Audio Unit - Vehicles With: AM/FM/CD/Bluetooth/SYNC....209
Alternative Frequencies....214
Automatic Volume Control....214
Autostore Control....213
News Broadcasts....214
Regional Mode....214
Sound Button....212
Station Preset Buttons....213
Station Tuning Control....212
Traffic Information Control....213
Waveband Button....212
Audio Unit - Vehicles With: AM/FM/CD....204
Alternative Frequencies....208
Automatic Volume Control....207
Autostore Control....207
News Broadcasts....208
Regional Mode....208
Sound Button....206
Station Preset Buttons....206
Station Tuning Control....206
Traffic Information Control....207
Waveband Button....206
Audio Unit - Vehicles With: Navigation System/Sony AM/FM/CD....227
Alternative Frequencies....232
Automatic Volume Control....232
Autostore Control....231
Digital Signal Processing....232
News Broadcasts....232
Regional Mode....233
Sound Button....230
Station Preset Buttons....231
Station Tuning Control....230
Traffic Information Control....231
Waveband Button....230

Fiesta (CCN) Vehicles Built From: 12-01-2015 Vehicles Built Up To: 14-10-2015, CG3582en enGBR, Edition date: 12/2014, First Printing

Audio Unit - Vehicles With: Sony AM/FM/CD....221
Alternative Frequencies....226
Automatic Volume Control....226
Autostore Control....225
Digital Signal Processing....226
News Broadcasts....226
Regional Mode....227
Sound Button....224
Station Preset Buttons....225
Station Tuning Control....224
Traffic Information Control....225
Waveband Button....224
Autolamps....49
Automatic Climate Control....83
Temperature Control....84
Automatic Transmission....110
Emergency Park Position Release Lever....112
Hints on Driving With an Automatic Transmission....112
Selector Lever Positions....110
Sport Mode and Manual Shifting....111
Auto-Start-Stop....102
To Re-Start the Engine....102
To Stop the Engine....102
Using Auto-Start-Stop....102
Autowipers....45
Auxiliary Power Points....94
12 Volt DC Power Point....94
Location....94

B

Bonnet Lock
See: Opening and Closing the Hood....148
Brake and Clutch Fluid Check....161
Brakes....115
General Information....115
Breaking-In....136
Brakes and Clutch....136
Engine....136
Tires....136
Bulb Specification Chart....175

C

Capacities and Specifications....199
Technical Specifications....200
Car Wash
See: Cleaning the Exterior....180
Catalytic Converter....106
Driving with a Catalytic Converter....106
Changing a Bulb - 3-Door....163
Central High Mounted Brake Lamp....167
Front Fog Lamps....165
Headlamp....163
Interior Lamp....168
License Plate Lamp....167
Luggage Compartment Lamp, Footwell Lamp and Liftgate Lamp....169
Reading Lamps....168
Rear Lamps....166
Side Repeater....165
Changing a Bulb - 5-Door....169
Approach Lamps....171
Central High Mounted Brake Lamp....173
Front Fog Lamps....171
Headlamp....169
Interior Lamp....174
License Plate Lamp....173
Luggage Compartment Lamp, Footwell Lamp and Liftgate Lamp....175
Reading Lamps....174
Rear Lamps....172
Side Repeater....171
Changing a Fuse....147
Changing a Road Wheel....189
Assembling the Wheel Brace....192
Installing a Road Wheel....193
Jacking and Lifting Points....190
Lug Nuts....189
Removing a Road Wheel....193
Removing the Wheel Trim....192
Vehicle Jack....190
Vehicles with a Spare Wheel....189
Changing the 12V Battery....161
Changing the Wiper Blades....162
Rear Window Wiper Blade....162
Windshield Wiper Blades....162

Fiesta (CCN) Vehicles Built From: 12-01-2015 Vehicles Built Up To: 14-10-2015, CG3582en enGBR, Edition date: 12/2014, First Printing

Checking MyKey System Status.....32
MyKey Distance.....33
Number of Admin Keys.....33
Number of MyKeys.....33
Checking the Wiper Blades.....162
Child Safety.....15
Child Safety Locks.....21
Left-Hand Side.....21
Right-Hand Side.....21
Child Seat Positioning.....18
Cigar Lighter.....94
Cleaning the Alloy Wheels.....181
Cleaning the Exterior.....180
Body Paintwork Preservation.....180
Cleaning the Chrome Trim.....180
Cleaning the Headlamps.....180
Cleaning the Rear Window.....180
Cleaning the Interior.....180
Instrument Cluster Screens, LCD Screens and Radio Screens.....180
Rear Windows.....181
Safety Belts.....180
Clearing All MyKeys.....32
Climate Control.....81
Principle of Operation.....81
Clock.....69
Type 1.....69
Type 2.....69
Cold Weather Precautions.....136
Coolant Check
See: Engine Coolant Check.....160
Creating a MyKey.....31
Vehicles with Keyless Starting.....32
Vehicles without Keyless Starting.....31
Cruise Control.....44
Principle of Operation.....124
Cruise control
See: Using Cruise Control.....124
Cup Holders.....95

D

Data Recording.....7
Daytime Running Lamps.....50
Diesel Particulate Filter.....100
Regeneration.....100
Digital Radio.....233
Direction Indicators.....51
DPF
See: Diesel Particulate Filter.....100
Driver Airbag.....24
Driver Knee Airbag.....26
Driving Aids.....126
Driving Hints.....136
Driving Through Water.....136
DRL
See: Daytime Running Lamps.....50

E

Electromagnetic Compatibility.....286
End User License Agreement.....287
SYNC® End User License Agreement (EULA).....287
Engine Coolant Check.....160
Adding Engine Coolant.....160
Engine Immobilizer
See: Passive Anti-Theft System.....40
Engine Oil Check.....159
Adding Oil.....159
Engine Oil Dipstick - 1.0L EcoBoost™.....158
Engine Oil Dipstick - 1.25L Duratec-16V (Sigma).....158
Engine Oil Dipstick - 1.4L Duratec-16V (Sigma).....158
Engine Oil Dipstick - 1.5L Duratorq-TDCi Diesel.....159
Engine Oil Dipstick - 1.6L Duratec-16V Ti-VCT (Sigma).....158
Engine Oil Dipstick - 1.6L Duratorq-TDCi (DV) Diesel.....159
Event Data Recording
See: Data Recording.....7
Exterior Mirrors.....55
Electric Folding Mirrors.....56
Fold-Away Exterior Mirrors.....56
Power Exterior Mirrors.....55

F

Fastening the Safety Belts.....22
Using Safety Belts During Pregnancy.....22
First Aid Kit.....138
Flat Tire Inflation
See: Temporary Mobility Kit.....182

Fiesta (CCN) Vehicles Built From: 12-01-2015 Vehicles Built Up To: 14-10-2015, CG3582en enGBR, Edition date: 12/2014, First Printing

Floor Mats.....136
Fog Lamps - Front
See: Front Fog Lamps.....50
Fog Lamps - Rear
See: Rear Fog Lamps.....50
Front Fog Lamps.....50
Fuel and Refueling.....104
Technical Specifications.....109
Fuel Consumption.....108
Calculating Fuel Economy.....109
Filling the Fuel Tank.....108
Fuel Consumption
See: Technical Specifications.....109
Fuel Quality - Diesel.....105
Long-Term Storage.....105
Fuel Quality - Gasoline.....105
Long-Term Storage.....105
Fuse Box Locations.....140
Engine Compartment Fuse Box.....140
Passenger Compartment Fuse Box.....140
Fuses.....140
Fuse Specification Chart.....141
Engine Compartment Fuse Box.....141
Passenger Compartment Fuse Box.....144

G

Gauges.....58
Engine Coolant Temperature Gauge.....58
Fuel Gauge.....58
General Information on Radio Frequencies.....27
Global Opening and Closing.....54
Global Closing.....55
Global Opening.....54

H

Handbrake
See: Parking Brake.....115
Hazard Warning Flashers.....138
Headlamp Exit Delay.....49
Headlamp Leveling.....50
Recommended Headlamp Leveling Switch Positions.....51
Head Restraints.....88
Adjusting the Head Restraints.....88
Removing the Head Restraints.....89
Heated Seats.....93
Heated Windows and Mirrors.....87
Heated Exterior Mirrors.....87
Heated Windows.....87
Heating
See: Climate Control.....81
Hill Start Assist.....113
Switching the System On and Off.....113
Using Hill Start Assist.....113
Hints on Controlling the Interior Climate.....84
Cooling the Interior Quickly.....86
General Hints.....84
Heating the Interior Quickly.....85
Maximum Cooling Performance in Instrument Panel or Instrument Panel and Footwell Positions.....87
Recommended Settings for Cooling 86
Recommended Settings for Heating.....85
Side Window Defogging in Cold Weather.....87
Vehicle Stationary for Extended Periods During Extreme High Ambient Temperatures.....86
Hints on Driving With Anti-Lock Brakes.....115
Hood Lock
See: Opening and Closing the Hood.....148

I

Ignition Switch.....96
Information Displays.....66
General Information.....66
Information Messages.....71
Installing Child Seats.....15
Attaching a Child Seat with Top Tethers.....17
Booster Seats.....16
Child Seats for Different Mass Groups.....15
ISOFIX Anchor Points.....17
Top Tether Anchor Points.....17
Instrument Cluster.....58
Instrument Lighting Dimmer.....49
Interior Lamps.....51
Courtesy Lamp.....51
Reading Lamps.....52

Fiesta (CCN) Vehicles Built From: 12-01-2015 Vehicles Built Up To: 14-10-2015, CG3582en enGBR, Edition date: 12/2014, First Printing

Interior Mirror.....56
Auto-Dimming Mirror.....57
Introduction.....5

J

Jump Starting the Vehicle.....138
To Connect the Booster Cables.....138
To Start the Engine.....139

K

Keyless Entry.....38
Disabled Keys.....39
General Information.....38
Locking and Unlocking the Doors With the Key Blade.....39
Locking Your Vehicle.....38
Passive Key.....38
Unlocking Your Vehicle.....39
Keyless Starting.....96
Failure to Start.....97
Ignition On.....97
Starting a Diesel Engine.....97
Starting With Automatic Transmission.....97
Starting With Manual Transmission.....97
Stopping the Engine When Your Vehicle is Moving.....98
Stopping the Engine When Your Vehicle is Stationary.....98
Keys and Remote Controls.....27

L

Lighting Control.....48
Headlamp Flasher.....49
High Beams.....49
Lighting Control Positions.....48
Parking Lamps.....48
Lighting.....48
General Information.....48
Load Carrying.....128
General Information.....128
Locking and Unlocking.....35
Emergency Locking with the Key.....36
Locking and Unlocking the Doors From Inside.....36
Locking and Unlocking the Doors with the Key.....36
Remote Control.....35
Unlocking the Doors with the Interior Door Handles.....36
Locks.....35
Luggage Covers.....129
Removing the Cover.....129
Lug Nuts
See: Changing a Road Wheel.....189

M

Maintenance.....148
General Information.....148
Technical Specifications.....176
Manual Climate Control.....82
Manual Liftgate.....37
Opening and Closing the Liftgate.....37
Manual Seats - 3-Door.....89
Adjusting the Height of the Driver Seat.....91
Adjusting the Lumbar Support.....90
Folding the Seat Backrest Forward 90
Moving the Seat Backward and Forward.....89
Recline Adjustment.....91
Returning the Seat Backrest to the Seating Position.....90
Manual Seats - 5-Door.....91
Adjusting the Height of the Driver Seat.....92
Adjusting the Lumbar Support.....91
Moving the Seat Backward and Forward.....91
Recline Adjustment.....92
Manual Transmission.....110
Selecting Reverse Gear.....110
Message Center
See: Information Displays.....66
Mirrors
See: Heated Windows and Mirrors.....87
See: Windows and Mirrors.....53
Mobile Communications Equipment.....8

Fiesta (CCN) Vehicles Built From: 12-01-2015 Vehicles Built Up To: 14-10-2015, CG3582en enGBR, Edition date: 12/2014, First Printing

MyKey Troubleshooting.....33
All Vehicles.....33
Vehicles With Push Button Start.....34
MyKey™.....31
Principle of Operation.....31

N

Navigation.....277
Hazard Spot Warning.....285
Information.....282
Loading Map Data.....277
Menu Structure.....278
Navigation Map Updates.....285
Road Safety.....277
Route Options.....280
Setting a Route.....278
Setting Your Navigation Preferences.....282
Type Approvals.....285

O

Oil Check
See: Engine Oil Check.....159
Opening and Closing the Hood.....148
Closing the Hood.....149
Opening the Hood.....148

P

Parking Aid.....119
Front and Rear Sensing System.....121
Rear Sensing System.....120
Parking Aids.....119
Principle of Operation.....119
Parking Brake.....115
All Vehicles.....116
Vehicles With Automatic Transmission.....115
Vehicles With Manual Transmission.....115
Passenger Airbag.....25
Switching the Passenger Airbag Off.....25
Switching the Passenger Airbag On.....25
Passive Anti-Theft System.....40
Arming the Engine Immobilizer.....40
Coded Keys.....40
Disarming the Engine Immobilizer.....40
Principle of Operation.....40
PATS
See: Passive Anti-Theft System.....40
Personalized Settings.....70
Measure Units.....70
Switching Chimes Off.....70
Power Door Locks
See: Locking and Unlocking.....35
Power Windows.....53
Accessory Delay.....54
Bounce-Back.....53
One-Touch Down.....53
One-Touch Up.....53
Window Lock.....53
Programming a MyKey.....32
Optional Settings.....32

R

Rear Fog Lamps.....50
Rear Seats.....92
Folding the Seatback.....92
Unfolding the Seatback.....92
Rear Under Floor Storage.....128
Adjustable Load Floor.....128
Rear View Camera.....122
Turning the Rear View Camera Off.....123
Turning the Rear View Camera On.....122
Using the Display.....122
Vehicles with Parking Aid.....123
Rear View Camera
See: Rear View Camera.....122
Rear Window Wiper and Washers.....47
Intermittent Wipe.....47
Rear Window Washer.....47
Reverse Gear Wipe.....47
Refueling.....107
Remote Control.....27
Changing the Remote Control Battery.....28
Programming a New Remote Control.....27
Remote Control With a Folding Key Blade.....28
Remote Control Without a Folding Key Blade.....29
Reprogramming the Unlocking Function.....28
Removing a Headlamp.....162
Repairing Minor Paint Damage.....181

Fiesta (CCN) Vehicles Built From: 12-01-2015 Vehicles Built Up To: 14-10-2015, CG3582en enGBR, Edition date: 12/2014, First Printing

Replacement Parts Recommendation....8
Collision Repairs....8
Scheduled Maintenance and Mechanical Repairs....8
Warranty on Replacement Parts....8
Replacing a Lost Key or Remote Control....30
Roadside Emergencies....138
Running-In
See: Breaking-In....136
Running Out of Fuel....105
Adding Fuel From a Portable Fuel Container....106

S

Safety Belt Height Adjustment....23
Safety Belt Minder....23
Turning the Safety Belt Minder Off....23
Safety Belts....22
Safety Precautions....104
Seats....88
Security....40
Side Airbags....26
Side Curtain Airbags....26
Sitting in the Correct Position....88
Snow Chains
See: Using Snow Chains....186
Speed Control
See: Cruise Control....124
Stability Control....117
Principle of Operation....117
Starter Switch
See: Ignition Switch....96
Starting a Diesel Engine....100
Cold or Hot Engine....100
Failure to Start....100
Starting a Gasoline Engine....99
Cold or Hot Engine....99
Engine Idle Speed after Starting....99
Failure to Start....99
Flooded Engine....99
Starting and Stopping the Engine....96
General Information....96
Steering Wheel Lock....98
Steering Wheel Lock - Vehicles With: Keyless Vehicle System....98
Unlocking the Steering Wheel....98
Steering Wheel....43
Storage Compartments....95
Supplementary Restraints System....24
Principle of Operation....24
Switching Off the Engine....101
Vehicles With a Turbocharger....101
Symbols Glossary....5
SYNC™ Applications and Services....252
In the Event of a Crash....254
Switching Emergency Assistance On and Off....253
SYNC AppLink....255
SYNC Emergency Assistance....253
SYNC™....237
General Information....237
SYNC™ Troubleshooting....267

T

Tailgate
See: Manual Liftgate....37
Technical Specifications
See: Capacities and Specifications....199
Temporary Mobility Kit....182
General Information....182
Inflating the Tire....183
Using the Kit....182
Tire Care....185
Tire Inflation When Punctured
See: Temporary Mobility Kit....182
Tire Pressure Monitoring System - Vehicles Built From: 07-04-2014....186
Changing Tires With a Tire Pressure Monitoring System....187
How Temperature Affects the Tire Pressures....189
Tire Pressure Monitoring System Reset Procedure....188
Understanding the Tire Pressure Monitoring System....187
Tire Repair Kit
See: Temporary Mobility Kit....182
Tires
See: Wheels and Tires....182

Fiesta (CCN) Vehicles Built From: 12-01-2015 Vehicles Built Up To: 14-10-2015, CG3582en enGBR, Edition date: 12/2014, First Printing

Tow Ball.....131
Driving With a Trailer.....132
Driving Without a Trailer.....133
Inserting the Tow Ball Arm.....132
Maintenance.....133
Removing the Tow Ball Arm.....133
Unlocking the Tow Ball Arm Mechanism.....131
Towing a Trailer - 1.6L EcoBoost™.....131
Towing a Trailer.....130
Trailer Lighting.....131
When towing a trailer:.....130
Towing Points.....134
Front Towing Point.....134
Rear Towing Point.....134
Towing the Vehicle on Four Wheels.....135
All Vehicles.....135
Vehicles with Automatic Transmission.....135
Towing.....130
Transmission.....110
Transmission
See: Transmission.....110
Trip Computer.....69
Distance Odometer.....70

U

Under Hood Overview - 1.0L Duratec (48kW/65PS).....150
Under Hood Overview - 1.0L EcoBoost™.....151
Under Hood Overview - 1.25L Duratec-16V (Sigma).....152
Under Hood Overview - 1.4L Duratec-16V (Sigma).....153
Under Hood Overview - 1.5L Duratorq-TDCi Diesel.....156
Under Hood Overview - 1.6L Duratec-16V Ti-VCT (Sigma).....154
Under Hood Overview - 1.6L Duratorq-TDCi (DV) Diesel.....157
Under Hood Overview - 1.6L EcoBoost™.....155
Unique Driving Characteristics.....102
USB Port.....235
Using Cruise Control.....124
Switching Cruise Control Off.....125
Switching Cruise Control On.....124
Using MyKey With Remote Start Systems.....33
Using Snow Chains.....186
Vehicles with Stability Control.....186
Using Stability Control - 1.6L EcoBoost™.....117
Switching Sport Mode On.....118
Switching the System Off.....118
Using Stability Control.....117
Using SYNC™ With Your Media Player.....259
Accessing Your USB Song Library.....263
Bluetooth Devices and System Settings.....267
Connecting Your Media Player to the USB Port.....259
Line In Audio.....265
Media Menu Features.....262
Media Voice Commands.....260
USB 2.....265
Using Voice Commands.....264
Voice Commands for Audio Sources.....265
What's Playing?.....260
Using SYNC™ With Your Phone.....241
Accessing Features Through the Cell Phone Menu.....246
Accessing Your Cell Phone Settings.....249
Bluetooth Devices.....250
Cell Phone Options During an Active Call.....245
Cell Phone Voice Commands.....242
Making a Call.....244
Pairing a Cell Phone For the First Time.....241
Pairing Subsequent Cell Phones.....242
Receiving a Call.....245
Text Messaging.....247
Using Voice Recognition.....238
Helpful Hints.....238
Initiating a Voice Session.....239
System Interaction and Feedback.....239
Using Winter Tires.....185

Fiesta (CCN) Vehicles Built From: 12-01-2015 Vehicles Built Up To: 14-10-2015, CG3582en enGBR, Edition date: 12/2014, First Printing

V

Vehicle Care.....180
Vehicle Identification Number.....200
Vehicle Identification Plate.....199
Ventilation
See: Climate Control.....81
Vents
See: Air Vents.....81
VIN
See: Vehicle Identification Number.....200
Voice Control.....44

W

Warning Lamps and Indicators - 1.6L EcoBoost™.....62
Anti-lock Braking System Warning Lamp.....62
Brake System Warning Lamp.....62
Cruise Control Indicator.....62
Direction Indicator.....62
Door Ajar Warning Lamp.....62
Engine Coolant Temperature Warning Lamp.....62
Engine Oil Warning Lamp.....63
Engine Warning Lamps.....63
Front Airbag Warning Lamp.....63
Front Fog Lamps Indicator.....63
Frost Warning Lamp.....63
Headlamp Indicator.....63
High Beam Indicator.....64
Ignition Warning Lamp.....64
Information Indicator.....64
Low Fuel Level Warning Lamp.....64
Rear Fog Lamps Indicator.....64
Safety Belt Minder Warning Lamp.....64
Shift Indicator.....64
Warning Lamps and Indicators.....59
Anti-lock Braking System Warning Lamp.....59
Brake System Warning Lamp.....59
Cruise Control Indicator.....59
Direction Indicator.....59
Door Ajar Warning Lamp.....59
Engine Coolant Temperature Warning Lamp.....59
Engine Oil Warning Lamp.....60
Engine Warning Lamps.....60
Front Airbag Warning Lamp.....60
Front Fog Lamps Indicator.....60
Frost Warning Lamp.....60
Glow Plug Indicator.....60
Headlamp Indicator.....61
High Beam Indicator.....61
Ignition Warning Lamp.....61
Information Indicator.....61
Low Fuel Level Warning Lamp.....61
Rear Fog Lamps Indicator.....61
Safety Belt Minder Warning Lamp.....61
Shift Indicator.....61
Stability Control Indicator.....61
Start-Stop Indicator.....61
Water In Fuel Indicator.....61
Warning Triangle.....138
Washer Fluid Check.....161
Washers
See: Cleaning the Exterior.....180
See: Wipers and Washers.....45
Wheel Nuts
See: Changing a Road Wheel.....189
Wheels and Tires.....182
General Information.....182
Technical Specifications.....194
Windows and Mirrors.....53
Windshield Washers.....46
Windshield Wipers.....45
Intermittent Wipe.....45
Speed Dependent Wipers.....45
Winter Tires
See: Using Winter Tires.....185
Wipers and Washers.....45

Fiesta (CCN) Vehicles Built From: 12-01-2015 Vehicles Built Up To: 14-10-2015, CG3582en enGBR, Edition date: 12/2014, First Printing

Fiesta (CCN) Vehicles Built From: 12-01-2015 Vehicles Built Up To: 14-10-2015, CG3582en enGBR, Edition date: 12/2014, First Printing

CG3582en